Suspension kits

www.vsm.skf.com
© SKF 2006
PUB 80/P1 6253 EN E 06/07

SKF

2006/07

Suspension kits

Suspension kits

2006/07

Federbeinlager/-sätze und Anschlagpuffer mit Staubschutz
Kits de suspension
Kit sospensioni
Kits de suspensión

SKF

Our high speed connection

Unsere Highspeed-Verbindung

Notre connexion grande vitesse.

Il nostro collegamento ad alta velocità

Nuestro enlace de alta velocidad.

Official Supplier

Scuderia Ferrari

Your high speed connection

Ihre Highspeed-Verbindung

Votre connexion grande vitesse.

Il tuo collegamento ad alta velocità

Su enlace de alta velocidad.

www.vsm.skf.com

SKF – the knowledge engineering company

From the company that invented the self-aligning ball bearing 100 years ago, SKF has evolved into a knowledge engineering com-pany that is able to draw on five platforms to create unique solutions for its customers. These platforms include bearings, bearing units and seals, of course, but extend to other areas including: lubricants and lubrication systems, critical for long bearing life in many applications; mechatronics that combine mechanical and electronics knowledge into systems for more effective linear motion and sensorized solutions; and a full range of services, from design and logistics support to conditioning monitoring and reliability systems.

Though the scope has broadened, SKF continues to maintain the world's leadership in the design, manufacture and marketing of rolling bearings, as well as complementary products such as radial seals. SKF also holds an increasingly important position in the market for linear motion products, high-precision aerospace bearings, machine tool spindles and plant maintenance services.

The SKF Group is globally certified both to ISO 14001, the international standard for environmental management, as well as OHSAS 18001, the health and safety management standard.

With some 100 manufacturing sites worl-dwide and sales companies in 70 countries, SKF is a truly international corporation. In addition, our distributors and dealers in some 15 000 locations around the world, an e-business marketplace and a global distribution system put SKF close to customers for the supply of both products and services. In essence, SKF solutions are available wherever and whenever customers need them. Overall, the SKF brand and the corporation are stronger than ever. As the knowledge engineering company, we stand ready to serve you with world-class product competencies, intellectual resources, and the vision to help you succeed.

SKF is a registered trademark of the SKF Group.

© SKF 2006

The contents of this publication are the copyright of the publisher and may not be reproduced (even extracts) unless permission is granted. Every care has been taken to ensure the accuracy of the information contained in this publication but no liability can be accepted for any loss or damage whether direct, indirect or consequential arising out of the use of the information contained herein.

Publication **PUB 80/P1 6253 EN E 06/07**

This publication supersedes publication PUB 80/P1 5568 EN E 05.

Printed in Sweden by Alfa Print AB Sweden.

1

2006 ➡ SKF 5

8

122

202

OE ➡ SKF 210

212

275

Install confidence

A *Wheel bearing kit*

B *Top mount*

C *Multi-V belt kit*

D *Timing belt kit*

E *AquaMax water pump*

F *Strut protection kit*

G *Suspension arm kit*

H *Clutch release bearing*

I *Ball joint*

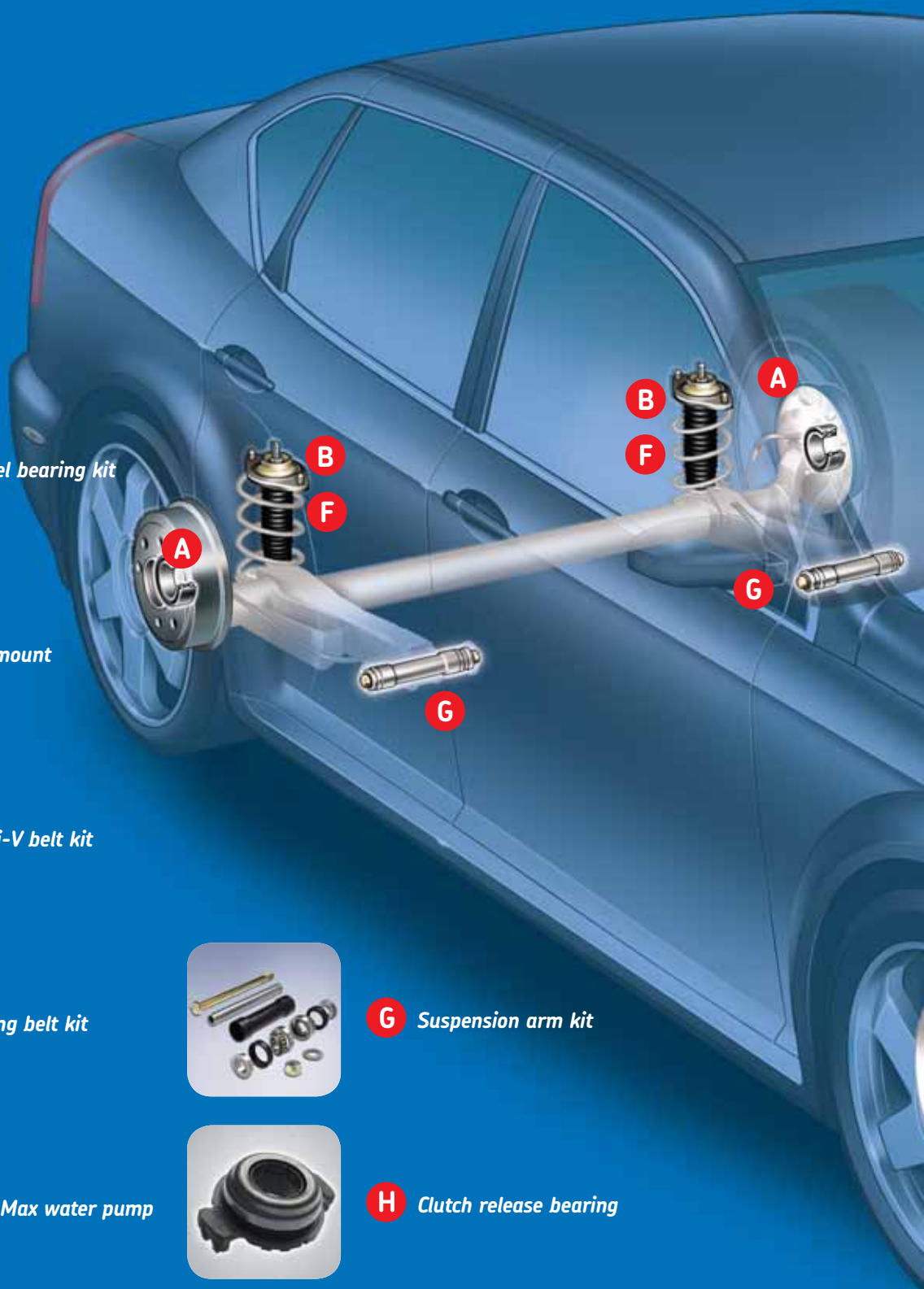

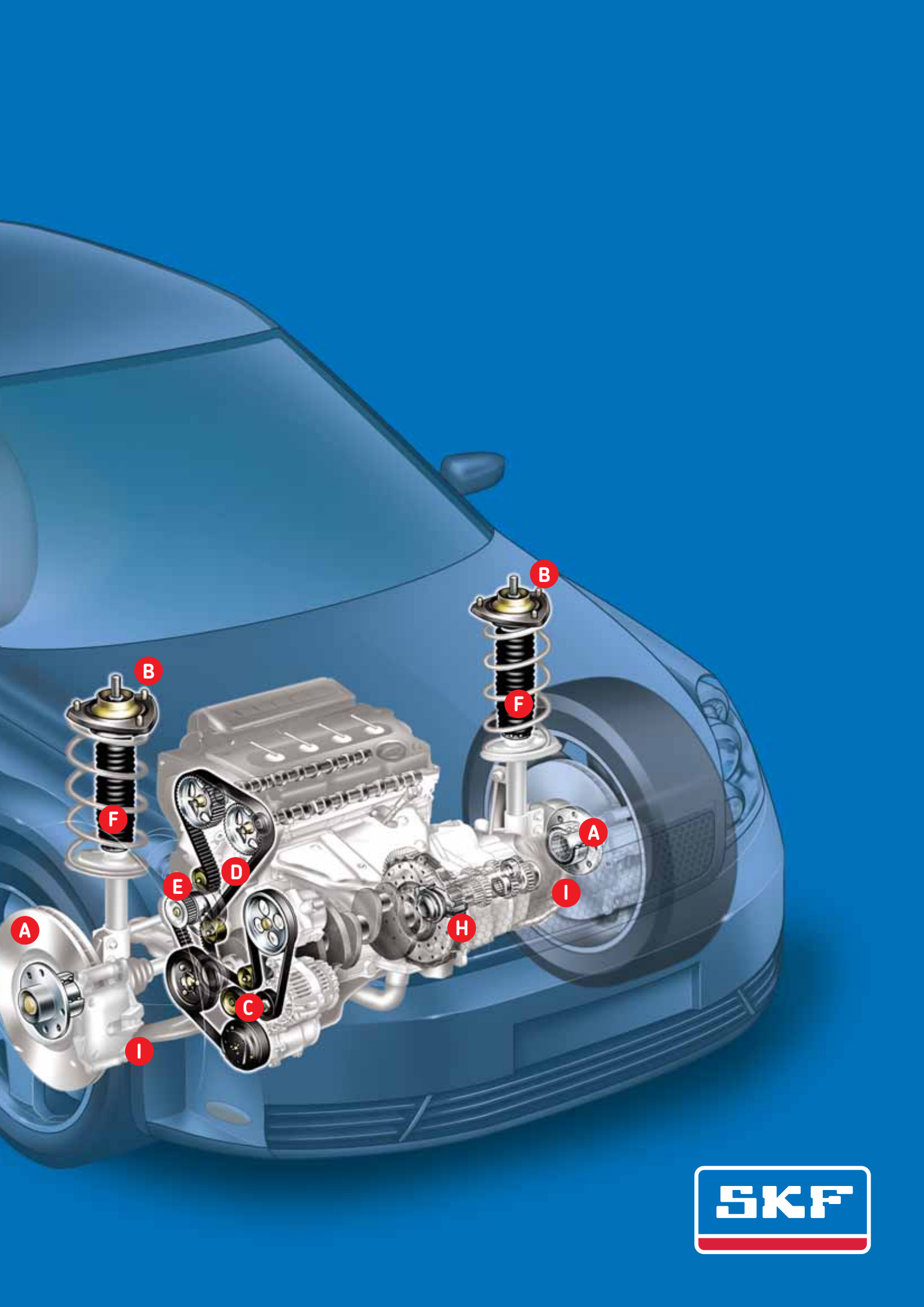
B
B
F
F
A
A
D
E
H
I
I
C

Suspension arm
VKDA XXXXX

Suspension bearing
VKD XXXXX T

Top mount
VKDA/C XXXXX T

Strut protection
VKDP XXXXX T

Ball joint
VKDS XXXXX

VKD 35035 T	FORD	FOCUS II / FOCUS II C-MAX	●
	MAZDA	3	
	VOLVO	S40 II / V50	
VKD 75003 T	HYUNDAI	SANTA FE	●

VKDA 35122 T	AUDI	A3 (8P1) / A3 Sportback (8PA)	●
	SEAT	ALTEA (5P1) / LEON /1P1) / TOLEDO III (5P2)	
	SKODA	OCTAVIA (1Z3) / OCTAVIA (1Z5)	
	VW	CADDY III / GOLF V / GOLF V PLUS / JETTA III / PASSAT (3C2) / PASSAT / PASSAT (3C5) Variant / TOURAN	
VKDA 35123 T	AUDI	A4 (8E2, B6) / A4 (8E5, B6) Avant / A4 (8EC) / A4 (8ED) Avant / A4 (8H7) /RS4 / S4 / Avant / S4 Convertible	●
VKDC 35232 T	FIAT	DOBLO / PALIO / PALIO Weekend / SIENA / STRADA	●
VKDA 35233 T	FIAT	STILO / STILO Multi Wagon	●
VKDA 35236 T	FIAT	MULTIPLA	●
VKDA 35321 T	CITROËN	JUMPER II	●
	FIAT	DUCATO III	
	PEUGEOT	BOXER II	
VKDA 35521 T	SAAB	9-5	●
VKDC 35627 T	VOLVO	S60 / S80 / V70 II / XC70 CROSS COUNTRY	●
VKDA 35630 T	VOLVO	S40 I / V40	●
VKDA 35631 T	NISSAN	MICRA / MICRA C+C	●
	RENAULT	CLIO III / MODUS	
VKDA 35633 T	DACIA	LOGAN	●
VKDC 35634 T	VOLVO	850 / C70 / S70 / S80 / V70 I / V70 II	●
VKDC 35703 T	MG	MG ZR	●
	ROVER	200 (RF) / 200 (XW) / 25 / 400 (XW) Tourer	
VKDA 35705 T	MG	MG ZS	●
	ROVER	400 (RT) / 45 (RT)	
VKDC 35709 T	MG	MG ZT / MG ZT- T	●
	ROVER	75 (RJ) / 75 (RJ) Tourer	
VKDA 40109 T	VW	PASSAT (3B2) / PASSAT (3B3) / PASSAT (3B5) Variant	○
VKDA 40111 T	SKODA	FAVORIT / FELICIA I / FELICIA II	○
VKDA 40123 T	AUDI	A2 (8Z0)	○
	SEAT	CORDOBA III (6L2) / IBIZA IV (6L) / LEON (1M1) / TOLEDO II (1M2)	
	SKODA	OCTAVIA (1U5)	
	VW	BORA (1J2) / BORA (1J6) / GOLF IV / GOLF IV Variant / NEW BEETLE	

2006 ➡ SKF

VKDA 40124 T	SEAT	ALTEA (5P1) / LEON (1P1) / TOLEDO III (5P2)	○
	VW	GOLF V / GOLF V PLUS	
VKDA 40125 T	AUDI	A3 (8P1) / A3 Sportback (8PA)	○
	VW	GOLF V / JETTA III	
VKDA 40126 T	SKODA	OCTAVIA (1Z3) / OCTAVIA (1Z5)	○
	VW	TOURANS	
VKDA 40128 T	SKODA	SUPERB	○
	VW	PASSAT (3B3) / PASSAT (3B6)	
VKDA 40129 T	AUDI	A4 (8E2, B6) / A4 (8E5, B6) Avant / A4 (8H7) / S4 / S4 Avant / S4 Convertible	○
VKDA 40304 T	PEUGEOT	307 / 307 CC / 307 SW	○
VKDA 40415 T	FORD	FOCUS II / FOCUS II C-MAX	○
VKDA 40416 T	FORD	FIESTA V / FUSION	○
VKDA 40611 T	VOLVO	850 / C70 / S70 / V70 I	○
VKDA 40614 T	VOLVO	S40 I / V40	○
VKDA 40616 T	VOLVO	S60 / S80 / V70 II	○
VKDA 40700 T	MG	MG ZR / MG ZT / MG ZT- T	○
	ROVER	200 (RF) / 200 (XW) / 25 / 400 (RT) / 400 (XW) / 400 (XW) Tourer / 45 (RT)	
VKDA 40815 T	MINI	MINI	○
VKDA 88404 T	MAZDA	626	●

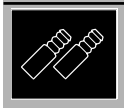

VKDP 31609 T	RENAULT	ESPACE IV / VEL SATIS	●
VKDP 33107 T	MAZDA	DEMIO	●
	SEAT	AROSA	
	VW	LUPO / POLO (6N1) / VENTO	
VKDP 33111 T	AUDI	A4 (8D2, B5) / A4 (8D5, B5) Avant / A4 (8E2, B6) / A4 (8E5, B6) Avant / A4 (8EC) / A4 (8H7) / A6 (4B,C5) / A6 (4B,C5) Avant	●
	VW	PASSAT (3B2) / PASSAT (3B3) / PASSAT (3B5) Variant / PASSAT (3B6)	
VKDP 33301 T	CITROËN	EVASION / JUMPY	●
	FIAT	SCUDO / ULYSSE (220)	
	LANCIA	ZETA	
	PEUGEOT	806 / EXPERT	
VKDP 33202 T	FIAT	TEMPRA / TEMPRA SW / TIPO	●
	LANCIA	DEDRA / DEDRA SW / DELTA II	
VKDP 33207 T	ALFA ROMEO	147 / 156 / 156 Sportwagon /GT	●
VKDP 33208 T	FIAT	STILO	●
VKDP 33304 T	CITROËN	C4	●
	PEUGEOT	307 / 307 CC / 307 SW	
VKDP 33311 T	CITROËN	C25 / JUMPER I / JUMPER II	●
	FIAT	DUCATO I Box / DUCATO I Bus / DUCATO I Flatbed / Chassis / DUCATO II / DUCATO III / TALENTO	
	PEUGEOT	BOXER I / BOXER II / J5	
VKDP 33404 T	SAAB	9-5	●
VKDP 33408 T	SAAB	9000	●

2006 ➡ SKF

	.../...			
VKDP 33410 T	FORD	TRANSIT II	●	
VKDP 33504 T	OPEL	OMEGA A / OMEGA B	●	
	VAUXHALL	OMEGA		
VKDP 33509 T	OPEL	AGILA	●	
	VAUXHALL	AGILA		
VKDP 33603 T	VOLVO	340-360	●	
VKDP 33802 T	MERCEDES BENZ	C-class (203)	●	
VKDP 33803 T	MINI	MINI	●	
VKDP 34500 T	OPEL	ASTRA F CLASSIC / ASTRA G / VECTRA B / ZAFIRA A	●	
	VAUXHALL	ASTRA Mk IV / ASTRAVAN / VECTRA Mk I / ZAFIRA		
VKDP 43400 T	FORD	ESCORT VII / FIESTA IV / PUMA		○
	MAZDA	121 / 929 II		
VKDP 43407 T	FORD	MONDEO III		○
VKDP 43700 T	AUDI	100 II / 100 II Avant / 200 (43)		○
	AUSTIN	MAESTRO I / MONTEGO I		
	ROVER	MAESTRO / MONTEGO		
VKDP 43800 T	MINI	MINI		○
VKDP 43802 T	BMW	5 (E12) / 5 (E28)		○
VKDP 44100 T	VW	GOLF III Variant		○
VKDP 44400 T	FORD	FOCUS I		○
VKDP 82100 T	TOYOTA	STARLET	●	
VKDP 83106 T	TOYOTA	AVENSIS (_T22_)	●	
VKDP 83300 T	HONDA	CIVIC IV	●	
	ROVER	45 (RT)		
VKDP 83301 T	HONDA	CONCERTO	●	
	ROVER	200 (XW) / 25 / STREETWISE		
VKDP 93300 T	HONDA	CONCERTO		○
	ROVER	200 (XW) / 25 / STREETWISE		

...

VKDS 13500	PEUGEOT	407 / 407 SW	●	

SKF ➡ SKF

VKDA 40802 T	BMW	VKDA 40805 T
VKDC 35610 T	VOLVO	VKDC 35634 T

SKF ➡

VKD 35011
VKDA 23005
VKDA 35513 T
VKDA 37200 T
VKDA 40802 T
VKDP 31606 T
VKDP 32602 T

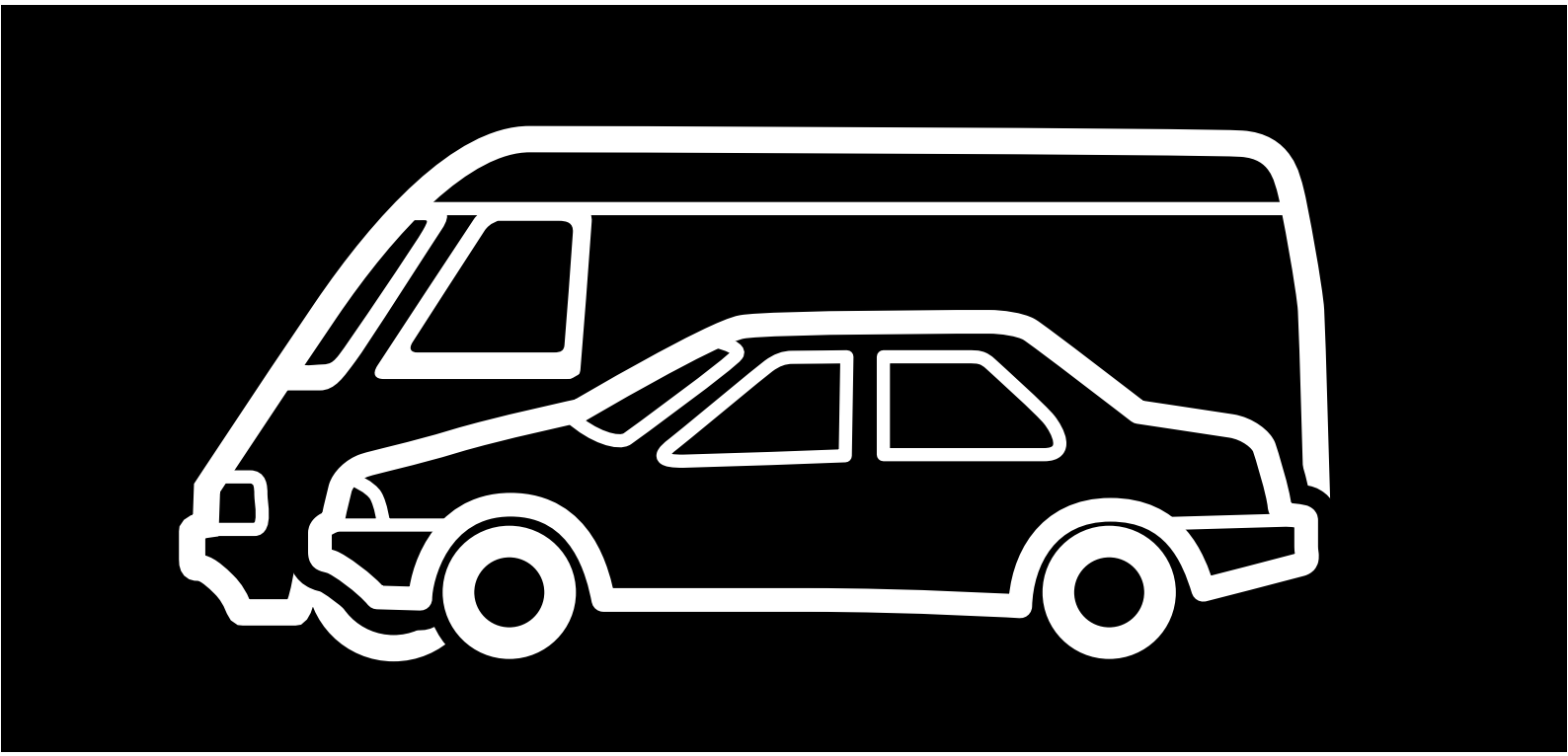

ALFA ROMEO 9
AUDI. 11
AUSTIN 18
BMW 18
CITROËN 22
CITROËN 29
DACIA. 29
DAEWOO 30
FIAT 30
FIAT 34
FORD 35
FORD 43
HONDA 44
HYUNDAI 44
KIA 45
LADA 45
LANCIA 45
MAZDA. 47
MERCEDES-BENZ 49
MERCEDES-BENZ 53
MG 53
MINI 54
MITSUBISHI. 54
NISSAN 55
OPEL 57
PEUGEOT 64
PEUGEOT 71
PROTON. 73
RENAULT 73
RENAULT 85
ROVER 85
SAAB 87
SEAT. 88
SKODA 92
SUZUKI. 94
TOYOTA 94
VAUXHALL 96
VOLVO 102
VW 107
VW 118

ALFA ROMEO

145						
145	07/94 → 01/01	●		**VKDA 35200 T**		**VKDP 83201 T**
146						
146	12/94 → 01/01	●		**VKDA 35200 T**		**VKDP 83201 T**
147						
147	01/01 → 07/05	●		**VKDA 35230 T**		**VKDP 33207 T**
147	01/01 → 07/05		○	VKDA____		
147 GTA						
3.2 GTA	02/03 → 07/05	●		**VKDA 35230 T**		
155						
155	01/92 → 01/98	●		**VKDA 35200 T**		**VKDP 83201 T**
Q4: 155	01/92 → 12/97	●		**VKDA 35200 T**		**VKDP 83201 T**
156						
1.6 16V T.SPARK, 1.8 16V T.SPARK, 2.0 16V T.SPARK, 2.0 JTS, 2.5 V6 24V	09/97 → 07/05	●		**VKDA 35230 T**		
1.6 16V T.SPARK, 1.8 16V T.SPARK, 2.0 16V T.SPARK, 2.0 JTS	09/97 → 06/05	●				**VKDP 33207 T**
1.9 JTD, 1.9 JTD 16V, 2.4 JTD	09/97 → 07/05	●		**VKDA 35230 T**		**VKDP 33207 T**
1.6 16V T.SPARK, 1.8 16V T.SPARK, 2.0 16V T.SPARK, 2.0 JTS, 2.5 V6 24V	09/97 → 07/05 →| CH 0116246		○	**VKDA 40204 T**		
1.6 16V T.SPARK, 1.8 16V T.SPARK, 2.0 16V T.SPARK, 2.0 JTS, 2.5 V6 24V	09/97 → 07/05 CH 0116246 |→		○	VKDA____		
1.9 JTD, 1.9 JTD 16V, 2.4 JTD	09/97 → 07/05 →| CH 0116246		○	**VKDA 40204 T**		
1.9 JTD, 1.9 JTD 16V, 2.4 JTD	09/97 → 07/05 CH 0116246 |→		○	VKDA____		
156 GTA						
3.2 GTA	03/02 → 07/05	●		**VKDA 35230 T**		
156 Sportwagon						
156 Sportwagon	05/00 → 07/05	●		**VKDA 35230 T**		
1.6 16V T.SPARK., 1.8 16V T.SPARK, 2.0 16V T.SPARK, 2.0 JTS	05/00 → 06/05 1)	●				**VKDP 33207 T**
1.9 JTD, 1.9 JTD 16V, 2.4 JTD	05/00 → 06/05 1)	●				**VKDP 33207 T**
Q4: 1.9 JTD 16V	07/04 → 06/05	●				**VKDP 33207 T**
1.6 16V T.SPARK., 1.8 16V T.SPARK, 2.0 16V T.SPARK, 2.0 JTS, 2.5 V6 24V	05/00 → 07/05		○	VKDA____		

ALFA ROMEO .../...

1.9 JTD, 1.9 JTD 16V, 2.4 JTD	05/00 → 07/05		○	VKDA____		
164						
2.0 T.S., 2.0 Turbo	06/87 → 04/92	●		**VKDA 35222 T**	**VKD 35015 T**	
2.0 Turbo	05/92 → 09/98	●		**VKDA 35223 T**	**VKD 35015 T**	
2.0 T.S.	09/92 → 09/98	●		**VKDA 35223 T**	**VKD 35015 T**	
3.0 i.e. QV	09/90 → 09/92	●		**VKDA 35222 T**	**VKD 35015 T**	
3.0 24V	09/92 → 09/98	●		**VKDA 35223 T**	**VKD 35015 T**	
3.0 24V QV	09/92 → 09/98	●		**VKDA 35223 T**	**VKD 35015 T**	
2.5 TD	06/87 → 09/92	●		**VKDA 35222 T**	**VKD 35015 T**	
2.5 TD	09/92 → 09/98	●		**VKDA 35223 T**	**VKD 35015 T**	
Q4: 3.0 24V	02/94 → 09/98	●		**VKDA 35223 T**	**VKD 35015 T**	
V6: 2.0 Turbo	03/91 → 09/92	●		**VKDA 35223 T**	**VKD 35015 T**	
V6: 2.0 Turbo	09/92 → 09/98	●		**VKDA 35223 T**	**VKD 35015 T**	
V6: 3.0	06/87 → 09/92	●		**VKDA 35222 T**	**VKD 35015 T**	
V6: 3.0	09/92 → 09/98	●		**VKDA 35223 T**	**VKD 35015 T**	
164	06/87 → 09/98 FWD		○	**VKDA 40208 T**		
2.0, 2.0 T.S., 2.0 Turbo	06/87 → 09/98 ~~AAS~~		○			—
2.0 T.S.	09/92 → 09/98 ~~AAS~~		○			—
3.0 i.e. QV	09/90 → 09/92 ~~AAS~~		○			—
3.0 24V	09/92 → 09/98 ~~AAS~~		○			—
2.5 TD	06/87 → 09/98 ~~AAS~~		○			—
V6: 2.0 Turbo, 2.5, 3.0	06/87 → 09/98 ~~AAS~~		○			—
V6: 2.0 Turbo	03/91 → 09/92 ~~AAS~~		○			—
V6: 3.0	09/92 → 09/98 ~~AAS~~		○			—
166						
166	09/98 → 07/05	●		**VKDA 35230 T**		
166	09/98 → 07/05		○	VKDA____		
33 (905)						
33 (905)	05/83 → 12/93	●		—	**VKD 35015 T**	**VKDP 33800 T**
4X4: 33 (905)	11/83 → 12/89	●		—	**VKD 35015 T**	**VKDP 33800 T**
33 (905A) Sportwagon						
33 (905A) Sportwagon	01/84 → 12/89	●		—	**VKD 35015 T**	**VKDP 33800 T**
4X4: 33 (905A) Sportwagon	09/84 → 12/89	●		—	**VKD 35015 T**	**VKDP 33800 T**
33 (907A)						
33 (907A)	01/90 → 09/94	●		**VKDA 35201 T**		**VKDP 33800 T**
4X4: 33 (907A)	01/90 → 09/94	●		**VKDA 35201 T**		**VKDP 33800 T**
33 (907B)						
33 (907B)	01/90 → 09/94	●		**VKDA 35201 T**		**VKDP 33800 T**
4X4: 33 (907B)	01/90 → 09/94	●		**VKDA 35201 T**		**VKDP 33800 T**
ALFASUD (901)						
1.2, 1.2 ti, 1.3 SC/ti Super, 1.3 Super, 1.3 ti, 1.5 ti, 1.5 ti Sprint	01/82 → 12/84	●		**VKDA 35201 T**		

ALFASUD Sprint (902)								
1.4, 1.5, 1.5 Veloce, 1.7, 1.7 i.e.		01/82 → 12/89		●		**VKDA 35201 T**		
GT								
GT		11/03 → 07/05		●		**VKDA 35230 T**		
1.8 TS, 2.0 JTS		11/03 → 06/05		●				**VKDP 33207 T**
1.8 TS, 2.0 JTS		11/03 → 07/05			○	VKDA____		
1.9 JTD		11/03 → 07/05			○	VKDA____		
SPIDER (916S_)								
SPIDER (916S_)		06/95 → 03/05	IST	●		—		
AUDI								
50								
1.1, 1.3	HB, HH	08/74 → 07/78		●		**VKDC 35103 T**		**VKDP 32103 T**
50	HB, HC, HE, HH, HJ	08/74 → 07/78			○	**VKDA 40102 T**		**VKDP 43102 T**
80 (80,82,B1)								
80 (80, 82, B1)		05/72 → 07/78	~~SPS~~		○			**VKDP 43101 T**
80 (81, 85, B2)								
80 (81, 85, B2)		08/78 → 12/86		●		**VKDC 35100 T**		
80 (81, 85, B2)		08/78 → 12/86	~~SPS~~, ~~HB~~	●				**VKDP 32103 T**
QUATTRO: 80 (81, 85, B2)		08/82 → 08/86		●		**VKDC 35100 T**		
QUATTRO: 80 (81, 85, B2)		08/82 → 08/86	~~SPS~~, ~~HB~~	●				**VKDP 32103 T**
80 (81, 85, B2)		08/78 → 12/86	~~SPS~~, FWD		○			**VKDP 43101 T**
QUATTRO: 80 (81, 85, B2)		08/82 → 08/86			○	VKDC 35104		
80 (89, 89Q, 8A, B3)								
80 (89, 89Q, 8A, B3)		06/86 → 10/91		●		**VKDC 35100 T**		
80 (89, 89Q, 8A, B3)		06/86 → 10/91	~~SPS~~, ~~HB~~	●				**VKDP 32103 T**
QUATTRO: 80 (89, 89Q, 8A, B3)		09/86 → 09/91		●		**VKDC 35100 T**		
QUATTRO: 80 (89, 89Q, 8A, B3)		09/86 → 09/91	~~SPS~~, ~~HB~~	●				**VKDP 32103 T**
80 (89, 89Q, 8A, B3)		06/86 → 10/91	~~SPS~~, FWD		○			**VKDP 43101 T**
QUATTRO: 80 (89, 89Q, 8A, B3)		09/86 → 09/91			○	VKDC 35104		
80 (8C, B4)								
80 (8C, B4)		09/91 → 12/94	~~HB~~, FWD	●		**VKDC 35100 T**		
1.6, 1.6 E, 2.0, 2.0 E, 2.0 E 16V, 2.3 E		09/91 → 12/94	~~SPS~~, ~~HB~~	●				**VKDP 32103 T**
1.9 TD, 1.9 TDI		09/91 → 12/94	~~SPS~~, ~~HB~~	●				**VKDP 32103 T**
QUATTRO: 2.0 E 16V, 2.0 E, 2.3 E		09/91 → 12/94	~~SPS~~, ~~HB~~	●				**VKDP 32103 T**
80 (8C, B4)		09/91 → 12/94	CH 8C-N-000 001 →, 2WD		○	**VKDA 40113 T**		
80 (8C, B4)		09/91 → 12/94	~~SPS~~, FWD		○			**VKDP 43101 T**
80 (8C, B4) Avant								
80 (8C, B4) Avant		09/91 → 01/96	~~HB~~	●		**VKDC 35100 T**		
1.6 E, 2.0, 2.0 E, 2.0 E 16V, 2.3 E		07/92 → 01/96	~~SPS~~, ~~HB~~	●				**VKDP 32103 T**

AUDI .../...						
1.9 TD, 1.9 TDI ... 09/91 → 01/96 ... ~~SPS~~, ~~HD~~	●					**VKDP 32103 T**
QUATTRO: 80 (8C, B4) Avant ... 09/91 → 07/95 ... ~~HD~~	●		**VKDC 35100 T**			
QUATTRO: 2.0 E 16V, 2.3 E ... 09/91 → 07/95 ... ~~SPS~~, ~~HD~~	●					**VKDP 32103 T**
80 (8C, B4) Avant ... 09/91 → 01/96 ... CH 8C-N-000 001 |→, 2WD		○	**VKDA 40113 T**			
S2 Avant						
QUATTRO: S2 ... 02/93 → 07/95 ... ~~HD~~	●		VKDC 35104			
RS2 Avant						
QUATTRO: RS2 ... 03/94 → 05/95	●		**VKDC 35100 T**			
90						
90 ... 10/84 → 09/91	●		**VKDC 35100 T**			**VKDP 32103 T**
QUATTRO: 90 ... 11/84 → 09/91	●		**VKDC 35100 T**			**VKDP 32103 T**
2.0, 2.0 20 V, 2.2, 2.2 E ... 10/84 → 09/91 ... ~~SPS~~, ~~HD~~, FWD		○				**VKDP 43101 T**
1.6 TD ... 10/85 → 09/91 ... ~~SPS~~, ~~HD~~, FWD		○				**VKDP 43101 T**
QUATTRO: 90 ... 11/84 → 09/91		○	VKDC 35104			
100 II						
100 II ... 06/76 → 07/82		○				**VKDP 43700 T**
100 II Avant						
100 II Avant ... 07/77 → 02/83		○				**VKDP 43700 T**
100 III						
100 III ... 08/82 → 07/91	●		—		**VKD 35023 T**	**VKDP 33104 T**
QUATTRO: 100 III ... 08/84 → 11/90	●		—		**VKD 35023 T**	
QUATTRO: 1.8, 1.8 CAT ... 10/84 → 11/90	●					**VKDP 33104 T**
QUATTRO: 2.3, 2.3 E ... 08/86 → 11/90	●					**VKDP 33104 T**
100 III ... 08/82 → 07/91 ... ~~AAS~~		○	VKDA____			
QUATTRO: 100 III ... 08/84 → 11/90 ... ~~AAS~~, ~~SPS~~		○	VKDA____			
100 III Avant						
100 III Avant ... 08/82 → 11/90	●		—		**VKD 35023 T**	**VKDP 33104 T**
QUATTRO: 100 III Avant ... 08/84 → 11/90	●		—		**VKD 35023 T**	
100 III Avant ... 08/82 → 11/90 ... ~~AAS~~		○	VKDA____			
QUATTRO: 100 III Avant ... 08/84 → 11/90 ... ~~AAS~~, ~~SPS~~		○	VKDA____			
100 IV						
100 IV ... 12/90 → 06/94	●		—		**VKD 35021 T**	
100 IV ... 12/90 → 06/94 ... ~~SPS~~, FWD	●					**VKDP 33104 T**
QUATTRO: 100 IV ... 12/90 → 06/94	●		—		**VKD 35021 T**	
100 IV ... 12/90 → 06/94 ... ~~AAS~~		○	VKDA____			
QUATTRO: 100 IV ... 12/90 → 06/94 ... ~~[illegible]~~		○	VKDA____			
S4						
QUATTRO: S4 ... 08/91 → 06/94	●		—		**VKD 35021 T**	
QUATTRO: S4 ... 08/91 → 06/94 ... ~~[illegible]~~		○	VKDA____			

100 IV Avant								
100 IV Avant	12/90 → 06/94		●		—	**VKD 35021 T**	
100 IV Avant	12/90 → 06/94	~~SPS~~, FWD	●				**VKDP 33104 T**
QUATTRO: 100 IV Avant	12/90 → 06/94		●		—	**VKD 35021 T**	
100 IV Avant	12/90 → 06/94	~~AAS~~		○	VKDA____		
QUATTRO: 100 IV Avant	12/90 → 06/94			○	VKDA____		
S4 Avant								
QUATTRO: S4 Avant	09/91 → 06/94		●		—	**VKD 35021 T**	
QUATTRO: S4 Avant	09/91 → 06/94			○	VKDA____		
200 (43)								
200 (43)	10/79 → 09/82		●		—	**VKD 35023 T**	
200 (43)	10/79 → 09/82			○			**VKDP 43700 T**
200 (44, 44Q)								
200 (44, 44Q)	08/83 → 09/91		●		—	**VKD 35023 T**	**VKDP 33104 T**
QUATTRO: 200 (44, 44Q)	08/83 → 12/91		●		—	**VKD 35023 T**	
QUATTRO: 2.1 Turbo	08/83 → 09/86		●				**VKDP 33104 T**
200 (44, 44Q)	08/83 → 09/91	~~AAS~~		○	VKDA____		
QUATTRO: 200 (44, 44Q)	08/83 → 12/91	~~AAS~~, ~~SPS~~		○	VKDA____		
200 Avant (44, 44Q)								
200 Avant (44, 44Q)	08/85 → 09/91		●		—	**VKD 35023 T**	**VKDP 33104 T**
QUATTRO: 200 Avant (44, 44Q)	09/83 → 12/91		●		—	**VKD 35023 T**	
200 Avant (44, 44Q)	08/85 → 09/91	~~AAS~~		○	VKDA____		
QUATTRO: 2.1 Turbo, 2.2 20V Turbo	09/83 → 12/90	~~AAS~~		○	VKDA____		
QUATTRO: 2.2 Turbo	09/83 → 12/91	~~Mod.~~ Exklusiv, ~~AAS~~		○	VKDA____		
A2 (8Z0)								
1.4, 1.6 FSI	02/00 → 11/05		●		**VKDA 35115 T**	**VKD 35025 T**	**VKDP 33800 T**
1.2 TDI, 1.4 TDI	02/00 → 11/05		●		**VKDA 35115 T**	**VKD 35025 T**	
1.4 TDI	02/00 → 02/06		●				**VKDP 33800 T**
A2 (8Z0)	02/00 → 11/05			○	***VKDA 40123 T***		
A3 (8L1)								
A3 (8L1)	09/96 → 11/05		●		**VKDA 35113 T**		**VKDP 33101 T**
QUATTRO: A3 (8L1)	12/96 → 11/05		●		**VKDA 35113 T**		
A3 (8L1)	09/96 → 11/05	FWD		○	**VKDA 40104 T**		**VKDP 43106 T**
S3								
QUATTRO: S3	03/99 → 11/05		●		**VKDA 35113 T**		
A3 (8P1)								
A3 (8P1)	05/03 → 11/05		●		**VKDA 35122 T**	**VKD 35025 T**	
QUATTRO: A3 (8P1)	05/03 → 11/05		●		**VKDA 35122 T**	**VKD 35025 T**	
A3 (8P1)	05/03 → 11/05			○	***VKDA 40125 T***		
QUATTRO: A3 (8P1)	05/03 → 11/05			○	***VKDA 40125 T***		
A3 Sportback (8PA)								
A3 Sportback (8PA)	09/04 → 11/05		●		**VKDA 35122 T**	**VKD 35025 T**	
QUATTRO: A3 Sportback (8PA)	09/04 → 11/05		●		**VKDA 35122 T**	**VKD 35025 T**	

AUDI .../...					
A3 Sportback (8PA) 09/04 → 11/05		○	***VKDA 40125 T***		
QUATTRO: A3 Sportback (8 PA) 09/04 → 11/05		○	***VKDA 40125 T***		
A4 (8D2, B5)					
A4 (8D2, B5) 01/95 → 11/00 →| CH 8D-W-012 334	●		**VKDA 35116 T**		
A4 (8D2, B5) 01/95 → 11/00 CH 8D-W-012 335 |→	●		**VKDA 35118 T**		
A4 (8D2, B5) 01/95 → 11/00 FWD	●				**VKDP 33111 T**
QUATTRO: A4 (8D2, B5) 01/95 → 11/00 →| CH 8D-W-012 334	●		**VKDA 35116 T**		
QUATTRO: A4 (8D2, B5) 01/95 → 11/00 CH 8D-W-012 335 |→	●		**VKDA 35118 T**		
QUATTRO: A4 (8D2, B5) 01/95 → 11/00 ~~SPS~~, ~~HD~~	●				**VKDP 33111 T**
A4 (8D2, B5) 01/95 → 11/00 →| CH 8D-X-199 999, FWD		○	**VKDA 40121 T**		
A4 (8D2, B5) 01/95 → 11/00 CH 8D-X-200 001 |→, FWD		○	**VKDA 40122 T**		
A4 (8D2, B5) 01/95 → 11/00 ~~SPS~~, ~~HD~~		○			**VKDP 43104 T**
A4 (8D2, B5) 01/95 → 11/00 SPS		○			**VKDP 43102 T**
S4					
QUATTRO: S4 09/97 → 11/00 →| CH 8D-W-012 334	●		**VKDA 35116 T**		
QUATTRO: S4 09/97 → 11/00 CH 8D-W-012 335 |→	●		**VKDA 35118 T**		
A4 (8D5, B5) Avant					
1.6, 1.8, 1.8 T, 2.4, 2.6, 2.8 07/95 → 09/01 →| CH 8D-W-012 334	●		**VKDA 35116 T**		
1.6, 1.8, 1.8 T, 2.4, 2.6, 2.8 07/95 → 09/01 CH 8D-W-012 335 |→, →| CH 8E-1-000 001	●		**VKDA 35118 T**		
1.6, 1.8, 1.8 T, 2.4, 2.6, 2.8 07/95 → 09/01 FWD	●				**VKDP 33111 T**
1.9 DUO 03/98 → 09/01 →| CH 8D-W-012 334	●		**VKDA 35116 T**		
1.9 DUO 03/98 → 09/01 CH 8D-W-012 335 |→, →| CH 8E-1-000 001	●		**VKDA 35118 T**		
1.9 TDI, 2.5 TDI 02/96 → 09/01 →| CH 8D-W-012 334	●		**VKDA 35116 T**		
1.9 TDI, 2.5 TDI 02/96 → 09/01 CH 8D-W-012 335 |→, →| CH 8E-1-000 001	●		**VKDA 35118 T**		
1.9 TDI, 2.5 TDI 02/96 → 09/01 FWD	●				**VKDP 33111 T**
QUATTRO: A4 (8D5, B5) Avant 07/95 → 09/01 →| CH 8D-W-012 334	●		**VKDA 35116 T**		
QUATTRO: A4 (8D5, B5) Avant 07/95 → 09/01 CH 8D-W-012 335 |→, →| CH 8E-1-000 001	●		**VKDA 35118 T**		
QUATTRO: A4 (8D5, B5) Avant 07/95 → 09/01 ~~SPS~~, ~~HD~~	●				**VKDP 33111 T**
1.6, 1.8, 1.8 T, 2.4, 2.6, 2.8 07/95 → 09/01 →| CH 8D-X-199 999, FWD		○	**VKDA 40121 T**		
1.6, 1.8, 1.8 T, 2.4, 2.6, 2.8 07/95 → 09/01 CH 8D-X-200 001 |→, FWD		○	**VKDA 40122 T**		
1.9 DUO 03/98 → 09/01 →| CH 8D-X-199 999, FWD		○	**VKDA 40121 T**		
1.9 DUO 03/98 → 09/01 CH 8D-X-200 001 |→, FWD		○	**VKDA 40122 T**		
1.9 TDI, 2.5 TDI 02/96 → 09/01 →| CH 8D-X-199 999, FWD		○	**VKDA 40121 T**		
1.9 TDI, 2.5 TDI 02/96 → 09/01 CH 8D-X-200 001 |→, FWD		○	**VKDA 40122 T**		
S4 Avant					
QUATTRO: S4 09/97 → 09/01 →| CH 8D-W-012 334	●		**VKDA 35116 T**		
QUATTRO: S4 09/97 → 09/01 CH 8D-W-012 335 |→, →| CH 8D-1-200 000	●		**VKDA 35118 T**		

RS4 Avant					
QUATTRO: RS4 ... 05/00 → 09/01 ... CH 8D-W-012 335 |→, →| CH 8D-1-200 000...	●		**VKDA 35118 T**	
A4 (8E2, B6)					
A4 (8E2, B6) ... 11/00 → 11/05 ...	●		***VKDA 35123 T***	
A4 (8E2, B6) ... 11/00 → 02/06 ... 2)	●			**VKDP 33111 T**
QUATTRO: A4 (8E2, B6) ... 11/00 → 11/05 ...	●		***VKDA 35123 T***	
QUATTRO: A4 (8E2, B6) ... 11/00 → 02/06 ... 2)	●			**VKDP 33111 T**
A4 (8E2, B6) ... 11/00 → 11/05 ...		○	***VKDA 40129 T***	
QUATTRO: A4 (8E2, B6) ... 11/00 → 11/05 ...		○	***VKDA 40129 T***	
S4					
QUATTRO: S4 ... 03/03 → 11/05 ...	●		***VKDA 35123 T***	
QUATTRO: S4 ... 03/03 → 11/05 ...		○	***VKDA 40129 T***	
A4 (8E5, B6) Avant					
A4 (8E5, B6) Avant ... 04/01 → 11/05 ...	●		***VKDA 35123 T***	
A4 (8E5, B6) Avant ... 04/01 → 02/06 ... 2)	●			**VKDP 33111 T**
QUATTRO: A4 (8E5, B6) Avant ... 04/01 → 11/05 ...	●		***VKDA 35123 T***	
QUATTRO: A4 (8E5, B6) Avant ... 04/01 → 02/06 ... 2)	●			**VKDP 33111 T**
A4 (8E5, B6) Avant ... 04/01 → 11/05 ...		○	***VKDA 40129 T***	
QUATTRO: A4 (8E5, B6) Avant ... 04/01 → 11/05 ...		○	***VKDA 40129 T***	
S4 Avant					
QUATTRO: S4 ... 03/03 → 11/05 ...	●		***VKDA 35123 T***	
QUATTRO: S4 ... 03/03 → 11/05 ...		○	***VKDA 40129 T***	
S4					
QUATTRO: S4 ... 03/04 → 11/05 ...	●		***VKDA 35123 T***	
QUATTRO: S4 ... 03/04 → 11/05 ...		○	***VKDA 40129 T***	
RS4					
QUATTRO: RS4 ... 09/05 → 11/05 ...	●		***VKDA 35123 T***	
QUATTRO: RS4 ... 09/05 → 11/05 ...		○	—	
A4 (8H7)					
A4 (8H7) ... 04/02 → 11/05 ...	●		***VKDA 35123 T***	**VKDP 33111 T**
QUATTRO: A4 (8H7) ... 05/03 → 11/05 ...	●		***VKDA 35123 T***	**VKDP 33111 T**
A4 (8H7) ... 04/02 → 11/05 ...		○	***VKDA 40129 T***	
QUATTRO: A4 (8H7) ... 05/03 → 11/05 ...		○	***VKDA 40129 T***	
A4 (8EC)					
A4 (8EC) ... 11/04 → 11/05 ...	●		***VKDA 35123 T***	
A4 (8EC) ... 11/04 → 02/06 ... 2)	●			**VKDP 33111 T**
QUATTRO: A4 (8EC) ... 11/04 → 11/05 ...	●		***VKDA 35123 T***	
QUATTRO: A4 (8EC) ... 11/04 → 02/06 ... 2)	●			**VKDP 33111 T**
A4 (8EC) ... 11/04 → 11/05 ...		○	—	
QUATTRO: A4 (8EC) ... 11/04 → 11/05 ...		○	—	
A4 (8ED) Avant					
A4 (8ED) Avant ... 11/04 → 11/05 ...	●		***VKDA 35123 T***	

AUDI .../...					
QUATTRO: A4 (8ED) Avant .. 11/04 → 11/05	●		***VKDA 35123 T***		
A4 (8ED) Avant .... 11/04 → 11/05		○	—		
QUATTRO: A4 (8ED) Avant .. 11/04 → 11/05		○	—		
A6 (4A, C4)					
A6 (4A, C4) .... 06/94 → 02/97	●		—	**VKD 35021 T**	
A6 (4A, C4) .... 06/94 → 02/97 .... ~~SPS~~, FWD	●				**VKDP 33104 T**
QUATTRO: A6 (4A, C4) .... 06/94 → 02/97	●		—	**VKD 35021 T**	
A6 (4A, C4) .... 06/94 → 02/97 .... ~~AAS~~		○	VKDA____		
QUATTRO: A6 (4A, C4) .... 06/94 → 02/97 .... ~~AAS~~, ...		○	VKDA____		
S6					
QUATTRO: S6 Turbo .... 06/94 → 02/97	●		—	**VKD 35021 T**	
QUATTRO: S6 4.2, S6 Plus .. 06/94 → 02/97	●		—	**VKD 35021 T**	
QUATTRO: S6 Turbo, S6 4.2, S6 Plus .... 06/94 → 02/97 .... ~~AAS~~, ...		○	VKDA____		
A6 (4A, C4) Avant					
A6 (4A, C4) Avant .... 06/94 → 12/97	●		—	**VKD 35021 T**	
A6 (4A, C4) Avant .... 06/94 → 12/97 .... ~~SPS~~, FWD	●				**VKDP 33104 T**
QUATTRO: A6 (4A, C4) Avant .... 06/94 → 12/97	●		—	**VKD 35021 T**	
A6 (4A, C4) Avant .... 06/94 → 12/97 .... ~~AAS~~		○	VKDA____		
QUATTRO: A6 (4A, C4) Avant .... 06/94 → 12/97 .... ~~AAS~~, ...		○	VKDA____		
A6 (4B,C5)					
A6 (4B, C5) .... 01/97 → 11/05	●		**VKDA 35118 T**		
A6 (4B, C5) .... 01/97 → 02/06 .... ~~AAS~~, ~~HD~~	●				**VKDP 33111 T**
QUATTRO: A6 (4B, C5) .... 02/97 → 11/05	●		**VKDA 35118 T**		
QUATTRO: A6 (4B, C5) .... 02/97 → 02/06 .... ~~AAS~~, ~~HD~~	●				**VKDP 33111 T**
A6 (4B, C5) .... 01/97 → 11/05 .... FWD		○	**VKDA 40110 T**		
S6					
QUATTRO: S6 .... 09/99 → 11/05	●		**VKDA 35118 T**		
S6 Avant					
QUATTRO: S6 Turbo .... 06/94 → 12/97	●		—	**VKD 35021 T**	
QUATTRO: S6 4.2, S6 Plus .. 06/94 → 12/97	●		—	**VKD 35021 T**	
QUATTRO: S6 Turbo, S6 4.2, S6 Plus .... 06/94 → 12/97 .... ~~AAS~~, ...		○	VKDA____		
A6 (4B,C5) Avant					
A6 (4B, C5) Avant .... 12/97 → 11/05	●		**VKDA 35118 T**		
A6 (4B, C5) Avant .... 12/97 → 02/06 .... ~~AAS~~, ~~HD~~	●				**VKDP 33111 T**
QUATTRO: A6 (4B, C5) Avant .... 12/97 → 11/05	●		**VKDA 35118 T**		
QUATTRO: A6 (4B, C5) Avant .... 12/97 → 02/06 .... ~~AAS~~, ~~HD~~	●				**VKDP 33111 T**
A6 (4B, C5) Avant .... 12/97 → 11/05 .... FWD		○	**VKDA 40110 T**		

S6 Avant						
QUATTRO: S6	09/99 → 11/05	●		**VKDA 35118 T**		
RS6						
RS6	07/02 → 11/05	●		**VKDA 35118 T**		
A6 (4F2)						
A6 (4F2)	05/04 → 11/05	●		—		
QUATTRO: A6 (4F2)	05/04 → 11/05	●		—		
A6 (4F2)	05/04 → 11/05		○	—		
QUATTRO: A6 (4F2)	05/04 → 11/05		○	—		
A6 (4F5) Avant						
A6 (4F5) Avant	03/05 → 11/05	●		—		
QUATTRO: A6 (4F5) Avant	03/05 → 11/05	●		—		
A6 (4F5) Avant	03/05 → 11/05		○	—		
QUATTRO: A6 (4F5) Avant	03/05 → 11/05		○	—		
COUPE (81, 85)						
COUPE (81, 85)	07/80 → 10/88	●		**VKDC 35100 T**		
COUPE (81, 85)	07/80 → 10/88 ~~SPS~~	●				**VKDP 32103 T**
QUATTRO: COUPE (81, 85)	10/84 → 10/88	●		**VKDC 35100 T**		
QUATTRO: 2.2, 2.3	10/84 → 10/88 ~~SPS~~	●				**VKDP 32103 T**
COUPE (81, 85)	07/80 → 10/88 2WD		○	—		**VKDP 43101 T**
QUATTRO: COUPE (81, 85)	10/84 → 10/88		○	VKDC 35104		
COUPE (89, 8B)						
COUPE (89, 8B)	10/88 → 12/96	●		**VKDC 35100 T**		
COUPE (89, 8B)	10/88 → 12/96 ~~SPS~~	●				**VKDP 32103 T**
QUATTRO: COUPE (89, 8B)	11/88 → 12/96	●		**VKDC 35100 T**		
QUATTRO: 2.0 20 V, 2.2, 2.3, 2.3 20V	11/88 → 12/96 ~~SPS~~	●				**VKDP 32103 T**
1.8, 2.0, 2.0 16 V, 2.0 20 V, 2.3, 2.3 20V, 2.6, 2.8	10/88 → 12/96 2WD		○	—		
QUATTRO: COUPE (89, 8B)	11/88 → 12/96		○	**VKDC 35100 T**		
QUATTRO						
QUATTRO	07/80 → 07/91	●		VKDC 35104		
TT						
TT	10/98 → 11/05	●		**VKDA 35113 T**		
QUATTRO: TT	10/98 → 11/05	●		**VKDA 35113 T**		
TT	10/98 → 11/05 FWD		○	**VKDA 40104 T**		
TT Roadster						
TT Roadster	10/99 → 11/05	●		**VKDA 35113 T**		
QUATTRO: TT Roadster	10/99 → 11/05	●		**VKDA 35113 T**		
TT Roadster	10/99 → 11/05 FWD		○	**VKDA 40104 T**		
V8						
QUATTRO: 3.6	10/88 → 07/91	●		—	**VKD 35023 T**	
QUATTRO: 3.6	08/91 → 02/94	●		—	**VKD 35021 T**	
QUATTRO: 4.2	10/91 → 02/94	●		—	**VKD 35021 T**	

AUSTIN

MAESTRO I

MAESTRO I	03/83 → 08/90	●				VKDP____
MAESTRO I	03/83 → 08/90		○			**VKDP 43700 T**

MONTEGO I

MONTEGO I	04/84 → 08/91	●				VKDP____
MONTEGO I	04/84 → 08/91		○			**VKDP 43700 T**

BMW

1 (E87)

1 (E87)	09/04 → 05/06	●		**VKDC 35814 T**		
1 (E87)	09/04 → 09/05 ~~SPS~~	●				—
1 (E87)	09/04 → 09/05 ~~SPS~~		○			—

3 (E21)

3 (E21)	06/75 → 07/83	●		**VKDC 35820 T**		**VKDP 33800 T**
3 (E21)	06/75 → 03/84		○			**VKDP 43101 T**

3 (E30)

316 i, 316 i 1.8, 318 i, 318 is, 320 i, 320 is, 323 i, 325 i, 325 e 2.7	09/82 → 08/91 ~~SPS~~, 2WD	●		**VKDC 35801 T**		**VKDP 33800 T**
324 d, 324 td	09/85 → 08/91 ~~SPS~~, 2WD	●		**VKDC 35801 T**		**VKDP 33800 T**
316 i, 316 i 1.8, 318 i, 318 is, 320 i, 320 is, 323 i, 325 i, 325 e 2.7	09/82 → 08/91 ~~SPS~~		○	VKDA 40805 T		
324 d, 324 td	09/85 → 08/91 ~~SPS~~		○	VKDA 40805 T		
4X4: 3 (E30)	03/86 → 08/91 ~~SPS~~		○	VKDA 40805 T		

M3 (E30)

M3 2.3	07/86 → 06/91 ~~SPS~~, 2WD	●		**VKDC 35801 T**		

3 (E30)

3 (E30)	12/85 → 10/93 ~~SPS~~	●		**VKDC 35801 T**		**VKDP 33800 T**
318 i, 320 i	04/86 → 10/93 ~~SPS~~		○	VKDA 40805 T		

M3 (E30)

M3 2.3	06/88 → 06/91 ~~SPS~~	●		**VKDC 35801 T**		

3 (E30) Touring

3 (E30) Touring	07/87 → 06/94 ~~SPS~~, 2WD	●		**VKDC 35801 T**		
3 (E30) Touring	07/87 → 06/94 ~~SPS~~	●				**VKDP 33800 T**
320 i, 325 i	07/87 → 03/93 SPS		○	—		
3 (E30) Touring	07/87 → 06/94 ~~SPS~~		○	VKDA 40805 T		
324 td	01/88 → 06/93 SPS		○	—		
4X4: 325 i X	06/88 → 10/93 ~~SPS~~		○	VKDA 40805 T		

3 (E36)

316 i	12/90 → 02/98 ~~SPS~~	●		**VKDC 35802 T**		**VKDP 33800 T**
318 i, 318 is	12/90 → 02/98 ~~SPS~~	●		**VKDC 35802 T**		**VKDP 33800 T**
320 i, 323 i 2.5, 325 i, 328 i	06/92 → 02/98 ~~SPS~~	●		**VKDC 35802 T**		**VKDP 33800 T**

318 tds, 325 td, 325 tds	06/92 → 02/98	SPS	●		VKDC 35802 T		VKDP 33800 T
3 (E36)	09/90 → 02/98			○	VKDA 40805 T		
3 (E36)							
3 (E36)	03/93 → 04/99	SPS	●		VKDC 35802 T		VKDP 33800 T
3 (E36)	03/93 → 04/99			○	VKDA 40805 T		
3 (E36)							
3 (E36)	03/92 → 04/99	SPS	●		VKDC 35802 T		
3 (E36)	03/92 → 04/99			○	VKDA 40805 T		
3 (E36) Touring							
3 (E36) Touring	01/95 → 10/99	SPS	●		VKDC 35802 T		
3 (E36) Touring	01/95 → 10/99	3)	●				VKDP 33800 T
3 (E36) Touring	01/95 → 10/99			○	VKDA 40805 T		
3 (E36) Compact							
3 (E36) Compact	03/94 → 08/00	SPS	●		VKDC 35802 T		
3 (E36) Compact	03/94 → 08/00			○	VKDA 40805 T		
3 (E46)							
3 (E46)	02/98 → 07/04		●		VKDC 35814 T		VKDP 33800 T
4X4: 3 (E46)	06/00 → 07/04		●		VKDC 35814 T		VKDP 33800 T
3 (E46)	02/98 → 07/04			○	VKDA 40805 T		
4X4: 3 (E46)	06/00 → 07/04			○	VKDA 40805 T		
3 (E46)							
318 Ci, 320 Ci, 323 Ci, 325 Ci, 330 Ci	04/00 → 07/04		●		VKDC 35814 T		
3 (E46)							
316 Ci, 318 Ci, 320 Ci, 323 Ci, 325 Ci, 328 Ci, 330 Ci	04/99 → 07/04		●		VKDC 35814 T		VKDP 33800 T
320 Cd, 330 Cd	03/03 → 07/04		●		VKDC 35814 T		VKDP 33800 T
316 Ci, 318 Ci, 320 Ci, 323 Ci, 325 Ci, 328 Ci, 330 Ci	04/99 → 07/04			○	VKDA 40805 T		
320 Cd, 330 Cd	03/03 → 07/04			○	VKDA 40805 T		
3 (E46) Touring							
3 (E46) Touring	10/99 → 07/04		●		VKDC 35814 T		VKDP 33800 T
4X4: 3 (E46) Touring	06/00 → 07/04		●		VKDC 35814 T		VKDP 33800 T
3 (E46) Touring	10/99 → 07/04			○	VKDA 40805 T		
4X4: 3 (E46) Touring	06/00 → 07/04			○	VKDA 40805 T		
3 (E46) Compact							
3 (E46) Compact	06/01 → 07/04		●		VKDC 35814 T		
3 (E46) Compact	06/01 → 07/04			○	VKDA 40805 T		
3 (E90)							
3 (E90)	01/05 → 05/06	SPS	●		VKDC 35814 T		

BMW .../...						
4X4: 3 (E90) 01/05 → 05/06 ~~SPS~~	●		VKDC 35814 T			
3 (E91) Touring						
3 (E91) Touring 01/05 → 05/06 ~~SPS~~	●		VKDC 35814 T			
4X4: 3 (E91) Touring 01/05 → 05/06 ~~SPS~~	●		VKDC 35814 T			
5 (E12)						
518, 518i, 520/6, 525, 528 i 07/74 → 08/81	●					VKDP 33800 T
5 (E12) 08/72 → 08/81		○				VKDP 43802 T
M5 (E12)						
M 535 i 06/80 → 08/81	●					VKDP 33800 T
5 (E28)						
518, 518 i, 518i, 520 i, 525 i, 525 e 2.7, 528 i, 535 i, M 535 i, 535 i, M535 i 06/81 → 06/90 ~~AAS~~, ~~SPS~~	●		VKDC 35801 T			
518, 518 i, 518i, 520 i, 525 i, 525 e 2.7, 528 i 06/81 → 06/90	●					VKDP 33800 T
524 d, 524 td 09/83 → 12/87 ~~AAS~~, ~~SPS~~	●		VKDC 35801 T			VKDP 33800 T
518, 518 i, 518i, 520 i, 525 i, 525 e 2.7, 528 i 06/81 → 06/90		○				VKDP 43802 T
524 d, 524 td 09/83 → 12/87		○				VKDP 43802 T
M5 (E28)						
M5 3.5 08/85 → 12/87 ~~AAS~~, ~~SPS~~	●		VKDC 35801 T			VKDP 33800 T
5 (E34)						
518 i, 520 i, 520 i 24V 01/88 → 09/95 ~~AAS~~, ~~SPS~~	●		VKDC 35801 T			VKDP 33800 T
525 i 24V 09/92 → 09/95 ~~AAS~~, ~~SPS~~	●		VKDC 35801 T			VKDP 33800 T
525 td, 525 tds 09/92 → 09/95 ~~AAS~~, ~~SPS~~	●		VKDC 35801 T			VKDP 33800 T
4X4: 525 i X 24V 10/91 → 09/95	●					VKDP 33800 T
518 i, 520 i, 520 i 24V, 525 i, 525 i 24V, 530 i V8 01/88 → 09/95 ~~AAS~~		○	VKDA 40809 T			
525 i, 525 i 24V, 530 i V8 01/88 → 09/95 AAS		○	—			
530 i, 535 i 01/88 → 09/95 EDC		○	—			
530 i, 535 i 01/88 → 09/95 ~~EDC~~		○	VKDA 40809 T			
540 i V8 09/92 → 09/95 ~~AAS~~		○	VKDA 40809 T			
524 td, 525 td, 525 tds 03/88 → 09/95 ~~AAS~~		○	VKDA 40809 T			
4X4: 525 i X 24V 10/91 → 09/95 AAS		○	—			
4X4: 525 i X 24V 10/91 → 09/95 ~~AAS~~		○	VKDA 40809 T			
M5 (E34)						
M5 3.6, M5 3.6 CAT, M5 3.8 10/88 → 09/95 ~~EDC~~		○	VKDA 40809 T			
5 (E34) Touring						
518 i, 520 i 11/91 → 12/95 ~~SPS~~	●		VKDC 35801 T			VKDP 33800 T
525 i 09/92 → 12/95 ~~SPS~~	●		VKDC 35801 T			VKDP 33800 T
525 td, 525 tds 12/91 → 12/95 ~~SPS~~	●		VKDC 35801 T			
525 td 03/93 → 01/97 ~~SPS~~	●					VKDP 33800 T
5 (E34) Touring 11/91 → 01/97 ~~AAS~~		○	VKDA 40809 T			

4X4: 525 i X	02/92 → 01/97	~~AAS~~		○	**VKDA 40809 T**
5 (E39)					
520 i	01/96 → 08/97		●		**VKDC 35815 T**
520 i	09/97 → 06/03		●		**VKDC 35814 T**
520 i, 523 i, 525 i	09/97 → 06/03		●		**VKDC 35814 T**
523 i	11/95 → 08/97		●		**VKDC 35815 T**
528 i	11/95 → 08/97	~~AAS~~	●		**VKDC 35815 T**
528 i, 530 i	11/95 → 06/03	AAS	●		—
528 i	09/97 → 09/00	~~AAS~~	●		**VKDC 35814 T**
530 i	09/00 → 06/03	~~AAS~~	●		**VKDC 35814 T**
535 i, 540 i	04/96 → 06/03		●		—
520 d, 525 d, 525 td, 525 tds	09/97 → 06/03		●		**VKDC 35814 T**
525 td, 525 tds	01/96 → 08/97		●		**VKDC 35815 T**
530 d	08/98 → 06/03	~~AAS~~	●		**VKDC 35814 T**
530 d	08/98 → 06/03	AAS	●		—
5 (E39) Touring					
520 i	01/97 → 08/97		●		**VKDC 35815 T**
520 i	09/97 → 05/04		●		**VKDC 35814 T**
520 i, 523 i, 525 i	09/97 → 05/04		●		**VKDC 35814 T**
523 i	01/97 → 08/97		●		**VKDC 35815 T**
528 i	01/97 → 08/97	~~AAS~~	●		**VKDC 35815 T**
528 i, 530 i	01/97 → 05/04	AAS	●		—
528 i	09/97 → 09/00	~~AAS~~	●		**VKDC 35814 T**
530 i	09/00 → 05/04	~~AAS~~	●		**VKDC 35814 T**
540 i	01/97 → 05/04		●		—
520 d, 525 d, 525 tds	09/97 → 05/04		●		**VKDC 35814 T**
525 tds	03/97 → 08/97		●		**VKDC 35815 T**
530 d	08/98 → 05/04	~~AAS~~	●		**VKDC 35814 T**
530 d	08/98 → 05/04	AAS	●		—
5 (E60)					
5 (E60)	07/03 → 05/06		●		**VKDC 35814 T**
5 (E61) Touring					
5 (E61) Touring	06/04 → 05/06		●		**VKDC 35814 T**
6 (E24)					
628 CSi, 633 CSi, 635 CSi	05/82 → 09/90	~~SPS~~	●		**VKDC 35801 T**	**VKDP 33800 T**
6 (E63)					
6 (E63)	01/04 → 05/06		●		**VKDC 35814 T**
6 (E64)					
6 (E64)	04/04 → 05/06		●		**VKDC 35814 T**
7 (E23)					
7 (E23)	05/77 → 08/86		●			**VKDP 33800 T**
7 (E32)					
730 i, iL, 730 i, iL V8, 735 i, iL, 740 i, iL V8	09/86 → 09/94	~~AAS~~	●			**VKDP 33800 T**

BMW .../...

7 (E38)						
7 (E38)	10/94 → 09/01		●		—	
7 (E38)	10/94 → 09/01			○	**VKDA 40813 T**	
7 (E65)						
735 i, Li, 745 i, Li	11/01 → 05/06		●		—	
X3						
X3	01/04 → 05/06		●		**VKDC 35814 T**	
2.5 i, 3.0 i	01/04 → 09/05	~~SPS~~	●			—
3.0 d	01/04 → 09/05	~~SPS~~	●			—
X5						
3.0 i, 4.4 i, 4.6 is	05/00 → 05/06		●		—	
4.4 i	05/00 → 09/05		●			—
3.0 d	05/01 → 05/06		●		—	—
Z1						
2.5	06/88 → 06/91		●		**VKDC 35801 T**	
Z3						
1.8, 1.9, 2.0, 2.2, 2.8, 3.0	10/95 → 07/04		●		**VKDC 35802 T**	
1.8, 1.9, 2.0, 2.2, 2.8, 3.0	05/97 → 07/04			○	**VKDA 40805 T**	
Z4						
Z4	02/03 → 05/06		●		**VKDC 35802 T**	
Z8						
4.9	06/00 → 09/01		●		—	

CITROËN

2 CV						
2 CV	01/66 → 07/90		●		**VKDA 13004**	
2 CV	01/66 → 07/90			○	**VKDA 13004**	
ACADIANE						
ACADIANE	08/78 → 10/88		●		**VKDA 13004**	
ACADIANE	08/78 → 10/88			○	**VKDA 13004**	
AMI						
AMI	01/63 → 12/77		●		**VKDA 13004**	
AMI	01/63 → 12/77			○	**VKDA 13004**	
AX						
AX	07/86 → 12/98		●		**VKDA 35300 T**	**VKD 35002 T** **VKDP 34303 T**
4X4: AX	06/91 → 12/96		●		**VKDA 35300 T**	**VKD 35002 T**
10, 10 E, 11, 11 CAT	07/86 → 12/98	Carbu.		○	**VKDA 27003**	

10, 10 E, 11, 11 CAT ... 07/86 → 12/98 ... Injec.		○	VKDA 27004		
1.3 Sport, 1.4 GTi ... 04/87 → 12/96 ...		○	VKDA 27004		
14 ... 12/86 → 04/97 ... Carbu.		○	VKDA 27003		
14 ... 12/86 → 04/97 ... Injec.		○	VKDA 27004		
14 D, 15 D ... 09/88 → 12/97 ...		○	VKDA 27003		
4X4: AX ... 06/91 → 12/96 ...		○	VKDA 27006		
BERLINGO					
1.1 i (MAHDZ, MBHDZ) ... 07/96 → 09/05 ... 475Kg	●		VKDA 35307 T	VKD 35002 T	VKDP 33300 T
1.1 i (MAHDZ, MBHDZ) ... 07/96 → 09/05 ... 600Kg, ⌀	●		VKDA 35307 T	VKD 35002 T	VKDP 33300 T
1.1 i (MAHDZ, MBHDZ) ... 07/96 → 09/05 ... 600Kg, ⌀	●		VKDA 35306 T	VKD 35002 T	VKDP 33300 T
1.4 i (MBKFX), 1.8 i ... 07/96 → 09/05 ... ⌀	●		VKDA 35307 T	VKD 35002 T	VKDP 33300 T
1.4 i (MBKFX), 1.8 i ... 07/96 → 09/05 ... ⌀	●		VKDA 35306 T	VKD 35002 T	VKDP 33300 T
1.4 bivalent, 1.4 i bivalent ... 11/02 → 09/05 ...	●		VKDA 35306 T	VKD 35002 T	VKDP 33300 T
1.8 D (MBA9A, MCA9A), 1.9 D, 1.9 D (MBWJZ, MCWJZ) ... 07/96 → 09/05 ... ⌀	●		VKDA 35307 T	VKD 35002 T	VKDP 33300 T
1.8 D (MBA9A, MCA9A), 1.9 D, 1.9 D (MBWJZ, MCWJZ) ... 07/96 → 09/05 ... ⌀	●		VKDA 35306 T	VKD 35002 T	VKDP 33300 T
2.0 HDI 90 (MBRHY, MCRHY) ... 12/99 → 09/05 ...	●		VKDA 35306 T	VKD 35002 T	VKDP 33300 T
4X4: 1.9 D 4WD ... 07/98 → 09/05 ... ⌀	●		VKDA 35307 T	VKD 35002 T	VKDP 33300 T
4X4: 1.9 D 4WD ... 07/98 → 09/05 ... ⌀	●		VKDA 35306 T	VKD 35002 T	VKDP 33300 T
4X4: 2.0 HDI 90 4WD ... 11/00 → 09/05 ...	●		VKDA 35306 T	VKD 35002 T	
1.1 i (MAHDZ, MBHDZ), 1.4 i (MBKFX), 1.8 i ... 07/96 → 11/02 ...		○	VKDA 27006		
1.8 D (MBA9A, MCA9A), 1.9 D, 1.9 D (MBWJZ, MCWJZ), 2.0 HDI 90 (MBRHY, MCRHY) ... 07/96 → 11/02 ...		○	VKDA 27006		
4X4: 1.9 D 4WD ... 07/98 → 11/02 ...		○	VKDA 27006		
BERLINGO (MF)					
1.1 i (MFHDZ), 1.4 bivalent, 1.4 i (MFKFX), 1.4 i bivalent, 1.6 16V (MFNFU), 1.8 i (MFLFX) ... 07/96 → 09/05 ... ⌀	●		VKDA 35307 T	VKD 35002 T	VKDP 33300 T
1.1 i (MFHDZ), 1.4 bivalent, 1.4 i (MFKFX), 1.4 i bivalent, 1.6 16V (MFNFU), 1.8 i (MFLFX) ... 07/96 → 09/05 ... ⌀	●		VKDA 35306 T	VKD 35002 T	VKDP 33300 T
electrique ... 01/00 → 09/05 ...	●		VKDA 35306 T	VKD 35002 T	VKDP 33300 T
1.6 HDI 75, 1.6 HDI 90, 1.8 D (MFA9A), 1.9 D (MFDJY, MFWJZ) ... 07/96 → 09/05 ... ⌀	●		VKDA 35307 T	VKD 35002 T	VKDP 33300 T
1.6 HDI 75, 1.6 HDI 90, 1.8 D (MFA9A), 1.9 D (MFDJY, MFWJZ) ... 07/96 → 09/05 ... ⌀	●		VKDA 35306 T	VKD 35002 T	VKDP 33300 T
2.0 HDI 90 (MFRHY) ... 12/99 → 07/03 ... ⌀	●		VKDA 35307 T	VKD 35002 T	VKDP 33300 T
2.0 HDI 90 (MFRHY) ... 12/99 → 07/03 ... ⌀	●		VKDA 35306 T	VKD 35002 T	VKDP 33300 T
4X4: 1.8 i 4WD (MFLFX) ... 04/97 → 09/05 ... ⌀	●		VKDA 35307 T	VKD 35002 T	VKDP 33300 T
4X4: 1.8 i 4WD (MFLFX) ... 04/97 → 09/05 ... ⌀	●		VKDA 35306 T	VKD 35002 T	VKDP 33300 T
4X4: 1.9 D 4WD (MFWJZ) ... 07/98 → 09/05 ... ⌀	●		VKDA 35307 T	VKD 35002 T	VKDP 33300 T
4X4: 1.9 D 4WD (MFWJZ) ... 07/98 → 09/05 ... ⌀	●		VKDA 35306 T	VKD 35002 T	VKDP 33300 T
1.1 i (MFHDZ), 1.4 i (MFKFX), 1.6 16V (MFNFU), 1.8 i (MFLFX) ... 07/96 → 11/02 ...		○	VKDA 27006		
electrique ... 01/00 → 11/02 ...		○	VKDA 27006		
1.8 D (MFA9A), 1.9 D (MFDJY, MFWJZ), 2.0 HDI 90 (MFRHY) ... 07/96 → 11/02 ...		○	VKDA 27006		

CITROËN .../...

4X4: BERLINGO (MF)	04/97 → 11/02		○	**VKDA 27006**		
BX						
14 E, 16	10/82 → 09/85	●		**VKDA 13003**	**VKD 24000**	
19 D	09/83 → 09/85	●		**VKDA 13003**	**VKD 24000**	
11, 14, 14 E, 15, 16, 16 E, 19, 19 E, 19 GTi, 19 GTi 16V	10/82 → 02/93		○	**VKDA 23001**	**VKD 24000**	
1.8 D, TRD Turbo, 19 D	09/83 → 09/93		○	**VKDA 23001**	**VKD 24000**	
4X4: BX	06/88 → 02/93		○	**VKDA 23001**	**VKD 24000**	
BX						
19 D	09/83 → 09/85	●		**VKDA 13003**	**VKD 24000**	
14, 15, 16, 19, 19 CAT	06/85 → 12/94		○	**VKDA 23001**	**VKD 24000**	
18 D, TRD Turbo, 19 D	09/83 → 12/94		○	**VKDA 23001**	**VKD 24000**	
4X4: 19	10/90 → 05/91		○	**VKDA 23001**	**VKD 24000**	
C1						
C1	06/05 → 09/05	●		—		
C15						
C15	05/88 → 09/05	●		**VKDA 35303 T**	**VKD 35002 T**	**VKDP 33300 T**
C15	10/84 → 09/05		○	**VKDA 23001**	**VKD 24000**	
C2						
C2	09/03 → 08/04	●		**VKDA 35316 T**	**VKD 35002 T**	—
C3						
C3	02/02 → 08/04	●		**VKDA 35316 T**	**VKD 35002 T**	VKDP____
C3 Pluriel						
C3 Pluriel	05/03 → 08/04	●		**VKDA 35316 T**	**VKD 35002 T**	VKDP____
C4						
C4	11/04 → 09/05	●		**VKDA 35315 T**	**VKD 35002 T**	**VKDP 33304 T**
C4	11/04 → 09/05		○	—		
C5 I						
1.8 16V (DC6FZB, DC6FZE), 2.0 16V, 2.0 16V HPi (DCRLZB), 3.0 V6 (DCXFXC, DCXFXF)	03/01 → 12/04	●		—		
2.0 HDi (DCRHZB, DCRHZE), 2.2 HDi (DC4HXB, DC4HXE)	03/01 → 12/04	●		—		
1.8 16V (DC6FZB, DC6FZE), 2.0 16V, 2.0 16V HPi (DCRLZB), 3.0 V6 (DCXFXC, DCXFXF)	03/01 → 09/05		○	—		
2.0 HDi (DCRHZB, DCRHZE), 2.2 HDi (DC4HXB, DC4HXE)	03/01 → 09/05		○	—		

C5 I							
1.8 16V (DE6FZB, DE6FZE), 2.0 16V, 2.0 16V HPi (DERLZB), 3.0 V6 (DEXFXC, DEXFXF)	06/01 → 12/04		●		—		
2.0 HDi (DERHZB, DERHZE), 2.2 HDi (DE4HXB, DE4HXE)	06/01 → 12/04		●		—		
1.8 16V (DE6FZB, DE6FZE), 2.0 16V, 2.0 16V HPi (DERLZB), 3.0 V6 (DEXFXC, DEXFXF)	06/01 → 09/05			○	—		
2.0 HDi (DERHZB, DERHZE), 2.2 HDi (DE4HXB, DE4HXE)	06/01 → 09/05			○	—		
C5 II							
1.8 16V (RC6FZB), 2.0 16V (RCRFJB, RCRFJC), 3.0 V6 (RCXFUF)	09/04 → 09/05			○	—		
1.6 HDi (RC8HZB), 2.0 HDi (RCRHRH), 2.2 HDi (RC4HXE)	09/04 → 09/05			○	—		
C5 II							
1.8 16V (RE6FZB), 2.0 16V (RERFJB, RERFJC), 3.0 V6 (REXFUF)	09/04 → 09/05			○	—		
1.6 HDi (RE8HZB), 2.0 HDi (RERHRH), 2.2 HDi (RE4HXE)	09/04 → 09/05			○	—		
C8							
C8	07/02 → 09/05		●		**VKDA 35317 T**	**VKD 35018 T**	—
CX I							
CX I	09/74 → 08/85			○	**VKDA 23002**	**VKD 24000**	
CX II							
CX II	07/85 → 12/92			○	**VKDA 23002**	**VKD 24000**	
DYANE							
DYANE	08/67 → 10/84		●		**VKDA 13004**		
DYANE	08/67 → 10/84			○	**VKDA 13004**		
EVASION							
EVASION	06/94 → 07/02		●		**VKDA 35317 T**	**VKD 35018 T**	**VKDP 33301 T**
JUMPY							
1.6, 1.6 i, 2.0, 2.0 i 16V	10/95 → 09/00		●		**VKDA 35317 T**	**VKD 35018 T**	**VKDP 33301 T**
1.9 D, 1.9 TD, 2.0 HDi	10/95 → 09/00		●		**VKDA 35317 T**	**VKD 35018 T**	
1.9 D, 1.9 TD, 2.0 HDi	10/95 → 11/05		●				**VKDP 33301 T**
MEHARI							
MEHARI	05/68 → 10/87		●		**VKDA 13004**		
MEHARI	05/68 → 10/87			○	**VKDA 13004**		

CITROËN .../...

SAXO						
SAXO	05/96 → 09/05	●		**VKDA 35302 T**	**VKD 35002 T**	
1.0 X, 1.1 X, SX	05/96 → 11/05	●				**VKDP 34303 T**
1.0 X	05/96 → 08/99		○	**VKDA 27003**		
1.0 X, 1.1 X, SX	05/96 → 08/99		○	**VKDA 27004**		
1.0 X, 1.1 X, SX	08/99 → 09/05		○	**VKDA 27004**		
1.1 X, SX	05/96 → 08/99		○	**VKDA 27003**		
1.1 X, SX	05/96 → 08/99		○	**VKDA 27004**		
1.1 X, SX	05/96 → 08/99		○	**VKDA 27004**		
1.4 VTS, 1.6 VTL, VTR, 1.6 VTS	05/96 → 09/05		○	**VKDA 27004**		
1.5 D	09/96 → 09/05		○	**VKDA 27004**		
VISA						
16 GTI	01/85 → 03/91	●		**VKDA 35303 T**	**VKD 35002 T**	**VKDP 33300 T**
17 D	04/84 → 03/91	●		**VKDA 35303 T**	**VKD 35002 T**	**VKDP 33300 T**
XANTIA I						
XANTIA I	03/93 → 01/98 HST	●		—		
XANTIA I	03/93 → 01/98		○	**VKDA 23001**	**VKD 24000**	
XANTIA I						
XANTIA I	06/95 → 01/98 HST	●		—		
XANTIA II						
XANTIA II	01/98 → 12/04 HST	●		—		
XANTIA II	01/98 → 09/05		○	**VKDA 23001**	**VKD 24000**	
XANTIA II						
XANTIA II	01/98 → 12/04 HST	●		—		
XM I						
XM I	05/89 → 06/94 HST	●		—		
XM I	05/89 → 06/94		○	VKDA 23005	**VKD 24000**	
XM I						
XM I	11/91 → 04/94 HST	●		—		
XM II						
XM II	05/94 → 10/00 HST	●		—		
XM II	05/94 → 10/00		○	VKDA 23005	**VKD 24000**	
XM II						
XM II	05/94 → 10/00 HST	●		—		
XSARA						
1.4 i	04/97 → 09/00 ~~AAS~~, ~~HD~~, GPL	●		**VKDA 35307 T**	**VKD 35002 T**	
1.4 i, 1.6 i, 1.8 i, 1.8 i 16V, 1.8 i Aut., 2.0 16V	04/97 → 09/00 HD	●		**VKDA 35307 T**	**VKD 35002 T**	
1.4 i, 1.6 i, 1.8 i, 1.8 i 16V, 1.8 i Aut., 2.0 16V	04/97 → 09/00 AAS	●		**VKDA 35307 T**	**VKD 35002 T**	

1.4 i	04/97 → 09/04	~~GPL~~	●		VKDA 35306 T	VKD 35002 T	
1.6 i	04/97 → 04/99	~~AAS~~, ~~HD~~	●		VKDA 35307 T	VKD 35002 T	
1.6 i	04/99 → 09/00	~~AAS~~, ~~HD~~	●		VKDA 35306 T	VKD 35002 T	
1.6 16V	09/00 → 09/04		●		VKDA 35306 T	VKD 35002 T	
1.8 i, 1.8 i 16V, 1.8 i Aut.	04/97 → 04/99	~~AAS~~, ~~HD~~	●		VKDA 35307 T	VKD 35002 T	
1.8 i, 1.8 i 16V, 1.8 i Aut.	04/99 → 09/00	~~AAS~~, ~~HD~~	●		VKDA 35306 T	VKD 35002 T	
2.0 16V	09/00 → 09/04		●		VKDA 35306 T	VKD 35002 T	
1.4 HDi	01/03 → 09/04		●		VKDA 35306 T	VKD 35002 T	
1.5 D	04/97 → 01/99	~~AAS~~, ~~HD~~	●		VKDA 35307 T	VKD 35002 T	
1.5 D, 1.8 D, 1.8 TD, 1.9 D, 1.9 SD, 1.9 TD	04/97 → 09/00	HD	●		VKDA 35307 T	VKD 35002 T	
1.5 D, 1.8 D, 1.8 TD, 1.9 D, 1.9 SD, 1.9 TD	04/97 → 09/00	AAS	●		VKDA 35307 T	VKD 35002 T	
1.5 D	01/99 → 09/00	~~AAS~~, ~~HD~~	●		VKDA 35306 T	VKD 35002 T	
1.8 D, 1.8 TD	04/97 → 04/99	~~AAS~~, ~~HD~~	●		VKDA 35307 T	VKD 35002 T	
1.8 D, 1.8 TD	04/99 → 09/00	~~AAS~~, ~~HD~~	●		VKDA 35306 T	VKD 35002 T	
1.9 D, 1.9 SD, 1.9 TD	04/97 → 04/99	~~AAS~~, ~~HD~~	●		VKDA 35307 T	VKD 35002 T	
1.9 D	07/98 → 02/99	~~AAS~~, ~~HD~~	●		VKDA 35307 T	VKD 35002 T	
1.9 D	02/99 → 09/04	~~AAS~~, ~~HD~~	●		VKDA 35306 T	VKD 35002 T	
1.9 D, 1.9 SD, 1.9 TD	04/99 → 09/00	~~AAS~~, ~~HD~~	●		VKDA 35306 T	VKD 35002 T	
2.0 HDi 109, 2.0 HDi 90	02/99 → 09/04		●		VKDA 35306 T	VKD 35002 T	
Entreprise: 1.4 i, 1.6 16V, 1.6 i, 1.8 i, 1.8 i 16V, 1.8 i Aut., 2.0 16V	04/97 → 09/04		●		VKDA 35307 T	VKD 35002 T	
Entreprise: 1.5 D, 1.8 D, 1.8 TD, 1.9 D, 1.9 SD, 1.9 TD, 2.0 HDi 109, 2.0 HDi 90	04/97 → 09/04		●		VKDA 35307 T	VKD 35002 T	
XSARA	04/97 → 11/05	~~HD~~	●				VKDP 33300 T
1.4 i, 1.6 16V, 1.6 i, 1.8 i, 1.8 i 16V, 1.8 i Aut.	04/97 → 09/04	~~, ~~HD~~		○	VKDA 27000		
1.4 i, 1.6 16V, 1.6 i, 1.8 i, 1.8 i 16V, 1.8 i Aut.	04/97 → 09/04	, HD		○	VKDA 27001		
2.0 16V	04/97 → 09/04			○	VKDA 27001		
1.5 D, 1.8 D, 1.8 TD, 1.9 D, 1.9 SD, 1.9 TD, 2.0 HDi 109, 2.0 HDi 90	04/97 → 09/04	~~, ~~HD~~		○	VKDA 27000		
1.5 D, 1.8 D, 1.8 TD, 1.9 D, 1.9 SD, 1.9 TD, 2.0 HDi 109, 2.0 HDi 90	04/97 → 09/04	, HD		○	VKDA 27001		

XSARA

1.4 i	03/98 → 09/00	~~AAS~~, ~~HD~~, GPL	●		VKDA 35307 T	VKD 35002 T	
1.4 i	03/98 → 09/00	HD	●		VKDA 35307 T	VKD 35002 T	
1.4 i	03/98 → 09/00	AAS	●		VKDA 35307 T	VKD 35002 T	
1.4 i	03/98 → 09/04	~~GPL~~	●		VKDA 35306 T	VKD 35002 T	
1.4 i	03/98 → 09/00	~~HD~~	●				VKDP 33300 T
1.6 16V, 1.6 i, 1.8 i, 1.8 i 16V, 2.0 16V, 2.0 i 16V	04/97 → 11/05	~~HD~~	●				VKDP 33300 T
1.6 i	02/98 → 09/00		●		VKDA 35307 T	VKD 35002 T	
1.6 16V	09/00 → 09/04		●		VKDA 35306 T	VKD 35002 T	
1.8 i	04/97 → 09/00	~~AAS~~, ~~HD~~, GPL	●		VKDA 35307 T	VKD 35002 T	
1.8 i, 1.8 i 16V, 2.0 i 16V	04/97 → 09/04	HD	●		VKDA 35307 T	VKD 35002 T	
1.8 i, 1.8 i 16V, 2.0 i 16V	04/97 → 09/04	AAS	●		VKDA 35307 T	VKD 35002 T	
1.8 i	04/97 → 09/00	~~GPL~~	●		VKDA 35306 T	VKD 35002 T	
1.8 i, 1.8 i 16V	02/98 → 01/99	~~AAS~~, ~~HD~~	●		VKDA 35307 T	VKD 35002 T	
1.8 i, 1.8 i 16V	01/99 → 09/00	~~AAS~~, ~~HD~~	●		VKDA 35306 T	VKD 35002 T	
2.0 16V	09/00 → 09/04		●		VKDA 35306 T	VKD 35002 T	
1.4 HDi, 1.9 D, 1.9 TD, 2.0 HDi 109, 2.0 HDI 90	02/98 → 11/05	~~HD~~	●				VKDP 33300 T
1.4 HDi	01/03 → 09/04		●		VKDA 35306 T	VKD 35002 T	
1.9 D, 1.9 TD	02/98 → 01/99	~~AAS~~, ~~HD~~	●		VKDA 35307 T	VKD 35002 T	
1.9 D, 1.9 TD	02/98 → 09/00	HD	●		VKDA 35307 T	VKD 35002 T	
1.9 D, 1.9 TD	02/98 → 09/00	AAS	●		VKDA 35307 T	VKD 35002 T	
1.9 D, 1.9 TD	01/99 → 09/04	~~AAS~~, ~~HD~~	●		VKDA 35306 T	VKD 35002 T	
2.0 HDi 109, 2.0 HDI 90	02/99 → 09/04		●		VKDA 35306 T	VKD 35002 T	

CITROËN .../...

1.4 i, 1.6 16V, 1.6 i, 1.8 i, 1.8 i 16V	04/97 → 09/04	~~HD~~		○	VKDA 27000	
1.4 i, 1.6 16V, 1.6 i, 1.8 i, 1.8 i 16V	04/97 → 09/04	HD		○	VKDA 27001	
2.0 16V, 2.0 i 16V	02/98 → 09/04			○	VKDA 27001	
1.9 D, 1.9 TD, 2.0 HDi 109, 2.0 HDI 90	02/98 → 09/04	~~HD~~		○	VKDA 27000	
1.9 D, 1.9 TD, 2.0 HDi 109, 2.0 HDI 90	02/98 → 09/04	HD		○	VKDA 27001	

XSARA

1.4 i	10/97 → 08/00		●		VKDA 35307 T	VKD 35002 T
1.4 i	10/97 → 09/00	~~HD~~	●			VKDP 33300 T
1.6 i, 1.8 i, 1.8 i 16V, 1.8 i Aut.	10/97 → 09/00		●		VKDA 35307 T	VKD 35002 T
1.6 16V, 1.6 i, 1.8 i, 1.8 i 16V, 1.8 i Aut., 2.0 16V	10/97 → 11/05	~~HD~~	●			VKDP 33300 T
1.6 16V	09/00 → 09/04		●		VKDA 35306 T	VKD 35002 T
2.0 16V	07/98 → 09/00		●		VKDA 35307 T	VKD 35002 T
2.0 16V	09/00 → 09/04		●		VKDA 35306 T	VKD 35002 T
1.4 HDi, 1.5 D, 1.8 D	10/97 → 11/05	~~HD~~	●			VKDP 33300 T
1.4 HDi	01/03 → 09/04		●		VKDA 35306 T	VKD 35002 T
1.5 D, 1.8 D, 1.9 D, 1.9 TD	10/97 → 08/00		●		VKDA 35307 T	VKD 35002 T
1.9 D, 1.9 TD	10/97 → 09/00	~~HD~~	●			VKDP 33300 T
2.0 HDI 90	02/99 → 08/00		●		VKDA 35307 T	VKD 35002 T
2.0 HDi 109, 2.0 HDI 90	02/99 → 11/05	~~HD~~	●			VKDP 33300 T
2.0 HDi 109	05/01 → 09/04		●		VKDA 35306 T	VKD 35002 T
1.4 i, 1.6 16V, 1.6 i, 1.8 i, 1.8 i 16V, 1.8 i Aut., 2.0 16V	10/97 → 09/04			○	VKDA 27001	
1.5 D, 1.8 D, 1.9 D, 1.9 TD, 2.0 HDi 109, 2.0 HDI 90	10/97 → 09/04			○	VKDA 27001	

XSARA PICASSO

XSARA PICASSO	02/00 → 09/05		●		VKDA 35306 T	VKD 35002 T	VKDP 33300 T
XSARA PICASSO	02/00 → 09/05			○	VKDA 27006	

ZX

1.1, 1.4, 1.4 i, 1.6 i, 1.8 i, 1.8 i 16V, 1.9 i, 2.0 i	03/91 → 06/97		●		VKDA 35307 T	VKD 35002 T	VKDP 33300 T
1.1, 1.4, 1.4 i, 1.6 i, 1.8 i, 1.8 i 16V, 1.9 i	03/91 → 06/97		●		VKDA 35306 T	VKD 35002 T	VKDP 33300 T
2.0 i 16V	07/92 → 06/97		●		—	VKD 35002 T	
1.8 D, 1.9 D, 1.9 TD	03/91 → 06/97		●		VKDA 35307 T	VKD 35002 T	VKDP 33300 T
1.8 D, 1.9 D, 1.9 TD	03/91 → 06/97		●		VKDA 35306 T	VKD 35002 T	VKDP 33300 T
1.1, 1.4, 1.4 i, 1.6 i, 1.8 i, 1.8 i 16V, 1.9 i, 2.0 i, 2.0 i 16V	03/91 → 06/97			○	VKDA 27000	
1.8 D, 1.9 D, 1.9 TD	03/91 → 06/97			○	VKDA 27000	

ZX

1.4 i, 1.6 i, 1.8 i, 1.8 i 16V	10/93 → 02/98		●		VKDA 35307 T	VKD 35002 T	VKDP 33300 T
1.4 i, 1.6 i, 1.8 i, 1.8 i 16V	10/93 → 02/98		●		VKDA 35306 T	VKD 35002 T	VKDP 33300 T
1.8 D, 1.9 D, 1.9 TD	10/93 → 10/97		●		VKDA 35307 T	VKD 35002 T	VKDP 33300 T
1.8 D, 1.9 D, 1.9 TD	10/93 → 10/97		●		VKDA 35306 T	VKD 35002 T	VKDP 33300 T
ZX	10/93 → 02/98			○	VKDA 27000	

CITROËN

C25						
1.8 E, 2.0, 2.0 E	09/81 → 03/94	●		—	**VKD 35016 T**	
1.8 E	07/87 → 02/94	●				**VKDP 33311 T**
2.0, 2.0 E	01/86 → 02/94	●				**VKDP 33311 T**
C25	01/86 → 03/94	●				**VKDP 33311 T**
1.9 D, 1.9 TD, 2.5 D, 2.5 D Turbo	10/85 → 02/94	●		—	**VKD 35016 T**	**VKDP 33311 T**
4X4: C25	01/87 → 02/94	●		—	**VKD 35016 T**	**VKDP 33311 T**
C25	09/81 → 03/94		○	**VKDA 13004**		
4X4: C25	01/87 → 02/94		○	**VKDA 13004**		
JUMPER I						
JUMPER I	02/94 → 04/02	●		**VKDA 35313 T**	**VKD 35017 T**	
JUMPER I	02/94 → 04/02	●				**VKDP 33311 T**
4X4: JUMPER I	03/00 → 04/02	●		**VKDA 35313 T**	**VKD 35017 T**	
4X4: JUMPER I	03/00 → 04/02	●				**VKDP 33311 T**
JUMPER I						
2.0	02/94 → 04/02	●		**VKDA 35313 T**	**VKD 35017 T**	**VKDP 33311 T**
1.9 D, 1.9 TD, 2.5 D, 2.5 TD, 2.5 TDi, 2.8 HDi	02/94 → 04/02	●		**VKDA 35313 T**	**VKD 35017 T**	**VKDP 33311 T**
4X4: 2.0	08/96 → 04/02	●		**VKDA 35313 T**	**VKD 35017 T**	**VKDP 33311 T**
4X4: 1.9 TD, 2.5 D, 2.5 TD, 2.5 TDI, 2.8 HDi	08/96 → 04/02	●		**VKDA 35313 T**	**VKD 35017 T**	**VKDP 33311 T**
JUMPER I						
2.0	03/94 → 04/02	●		**VKDA 35313 T**	**VKD 35017 T**	
2.0	03/94 → 04/02	●				**VKDP 33311 T**
1.9 TD, 2.5 D, 2.5 TD, 2.5 TDi, 2.8 HDi	03/94 → 04/02	●		**VKDA 35313 T**	**VKD 35017 T**	
1.9 TD, 2.5 D, 2.5 TD, 2.5 TDi, 2.8 HDi	03/94 → 04/02	●				**VKDP 33311 T**
4X4: JUMPER I	03/00 → 04/02	●		**VKDA 35313 T**	**VKD 35017 T**	
4X4: JUMPER I	03/00 → 04/02	●				**VKDP 33311 T**
JUMPER II						
JUMPER II	04/02 → 07/05	●		**VKDA 35321 T**	**VKD 35017 T**	
JUMPER II	04/02 → 11/05	●				**VKDP 33311 T**
4X4: 2.8 HDi	04/02 → 07/05	●		**VKDA 35321 T**	**VKD 35017 T**	
4X4: 2.8 HDi	04/02 → 11/05	●				**VKDP 33311 T**
JUMPER II						
2.0, 2.0 bivalent	04/02 → 07/05	●		**VKDA 35321 T**	**VKD 35017 T**	
2.0	04/02 → 11/05	●				**VKDP 33311 T**
2.0 HDi, 2.2 HDi, 2.8 HDi	04/02 → 07/05	●		**VKDA 35321 T**	**VKD 35017 T**	**VKDP 33311 T**
JUMPER II						
JUMPER II	04/02 → 07/05	●		**VKDA 35321 T**	**VKD 35017 T**	
JUMPER II	04/02 → 11/05	●				**VKDP 33311 T**

DACIA

LOGAN						
LOGAN	09/04 → 05/06	●		**VKDA 35633 T**		

DAEWOO

ESPERO					
1.5, 1.5 16V, 1.8, 2.0	10/91 → 09/99	●	**VKDC 35505 T**		**VKDP 33500 T**
LANOS					
LANOS	05/97 → 03/04	●			**VKDP 33500 T**
LEGANZA					
1.8	06/97 → 12/98	●	—	**VKD 75001 T**	
2.0 16V	06/97 → 12/98	●	—	**VKD 75001 T**	
MATIZ					
MATIZ	09/98 → 03/04	●			**VKDP 33500 T**
NEXIA					
NEXIA	02/95 → 08/97	●	**VKDC 35505 T**		**VKDP 33500 T**

FIAT

BRAVA					
1.2 16V 80, 1.4, 1.4 12 V	10/95 → 10/01	●	**VKDC 35204 T**		
1.2 16V 80, 1.4, 1.4 12 V, 1.6 16V	10/95 → 10/01 ~~SPS~~, CH 4085698 →	●			**VKDP 33300 T**
1.6 16V	10/95 → 10/01 ~~Mot.~~ 182B0	●	**VKDC 35204 T**		
1.8 GT 16V	10/95 → 10/01	●	**VKDC 35204 T**		
1.8 GT 16V	10/95 → 10/01 ~~SPS~~	●			**VKDP 33300 T**
1.9 D, 1.9 JTD 105, 1.9 TD 100 S, 1.9 TD 75 S..	10/95 → 10/01	●	**VKDC 35204 T**		
1.9 D, 1.9 JTD 105, 1.9 TD 100 S, 1.9 TD 75 S..	10/95 → 10/01 ~~SPS~~	●			**VKDP 33300 T**
BRAVO					
1.2 16V 80, 1.4, 1.6 16V, 1.8 GT	10/95 → 10/01	●	**VKDC 35204 T**		
1.2 16V 80, 1.4, 1.6 16V	10/95 → 10/01 ~~SPS~~, CH 4085698 →	●			**VKDP 33300 T**
2.0 HGT 20V	10/95 → 10/01 ~~SPS~~	●	**VKDC 35204 T**		**VKDP 33300 T**
2.0 HGT 20V	10/95 → 10/01 SPS	●	**VKDA 35200 T**		
1.9 D, 1.9 JTD 105, 1.9 TD 100 S, 1.9 TD 75 S .	10/95 → 10/01	●	**VKDC 35204 T**		
1.9 D, 1.9 JTD 105, 1.9 TD 100 S, 1.9 TD 75 S..	10/95 → 10/01 ~~SPS~~	●			**VKDP 33300 T**
CINQUECENTO					
CINQUECENTO	07/91 → 01/98	●	**VKDC 35202 T**		
0.7 (170AA), 0.7 i (170AD), 0.9 (170AB), 0.9 i.e. (170AC), 0.9 i.e. S (170AF, 170CF)	07/91 → 01/98 ~~SPS~~	●			**VKDP 33203 T**
COUPE					
COUPE	11/93 → 03/04	●	**VKDA 35200 T**		

CROMA (154)								
2000 i.e., 2000 i.e. Turbo	12/85 → 12/90	HD		●		**VKDC 35213 T**		—
2000 CHT	12/85 → 09/92	Ø		●		**VKDC 35213 T**		—
2000 CHT	12/85 → 09/92	Ø		●		**VKDC 35214 T**		—
2000 16V, 2000 i.e., 2000 i.e. Turbo	01/91 → 08/96	HD		●		**VKDC 35214 T**		—
2500 V6	06/93 → 08/96			●		**VKDC 35214 T**		—
1900 Turbo D i.d., 2500 TD, 2500 D, 2500 TDE	12/85 → 12/96			●		**VKDC 35214 T**		—
2000 CHT	01/91 → 09/92				○	**VKDA 40208 T**		—
2000 16V, 2000 i.e., 2000 i.e. Turbo, 2500 V6	01/91 → 08/96	HD			○	**VKDA 40208 T**		—
1900 Turbo D i.d.	05/89 → 10/92				○	**VKDA 40208 T**		—
1900 Turbo D i.d.	11/92 → 12/96	CH 53014 →			○	**VKDA 40208 T**		—
2500 TD, 2500 TDE	05/89 → 08/96				○	**VKDA 40208 T**		—
DOBLO								
DOBLO	03/01 → 07/05			●		**VKDC 35232 T**		
DUNA								
DUNA	01/89 → 12/91			●		**VKDA 37203 T**		
DUNA Weekend								
DUNA Weekend	01/89 → 12/91			●		**VKDA 37203 T**		
FIORINO (146)								
FIORINO (146)	01/88 → 05/01			●		**VKDA 37203 T**		
FIORINO (147)								
1.3, 1.5	07/88 → 08/93			●		**VKDA 37203 T**		
1.7 Diesel	07/88 → 03/04			●		**VKDA 37203 T**		
IDEA								
1.2 16V, 1.4 16V	01/04 → 07/05			●		—		
1.3 JTD, 1.9 JTD	01/04 → 07/05			●		**VKDA 35225 T**	**VKD 35030 T**	
MAREA								
MAREA	09/96 → 03/04			●		**VKDC 35204 T**		
MAREA Weekend								
MAREA Weekend	09/96 → 03/04			●		**VKDC 35204 T**		
MULTIPLA								
MULTIPLA	04/99 → 07/05			●		**VKDA 35236 T**	**VKD 35018 T**	
PALIO								
PALIO	04/96 → 07/05			●		**VKDC 35232 T**		
PALIO Weekend								
PALIO Weekend	04/96 → 07/05			●		**VKDC 35232 T**		

FIAT .../...							
PANDA (141A_)							
PANDA (141A_)	10/80 → 03/04		●		**VKDA 37201 T**		**VKDP 33800 T**
4X4: PANDA (141A_)	09/83 → 03/04		●		**VKDA 37201 T**		**VKDP 33800 T**
PANDA (169)							
PANDA (169)	09/03 → 07/05		●		**VKDA 35220 T**		—
PANDA							
PANDA	01/86 → 03/04		●		**VKDA 37201 T**		**VKDP 33800 T**
PUNTO I							
PUNTO I	09/93 → 09/99		●		**VKDC 35203 T**		**VKDP 31200 T**
PUNTO I	09/93 → 09/99			○	**VKDA 27014**		
PUNTO I							
PUNTO I	04/96 → 12/99		●		**VKDC 35203 T**		**VKDP 31200 T**
PUNTO I	04/96 → 02/00			○	**VKDA 27014**		
PUNTO I							
PUNTO I	04/94 → 12/99		●		**VKDC 35203 T**		**VKDP 31200 T**
PUNTO II							
1.2 60, 1.2 Natural Power	09/99 → 07/05		●		**VKDA 35220 T**		
1.2 16V 80	09/99 → 07/05	~~SPS~~	●		**VKDA 35220 T**		
1.2 16V 80	09/99 → 07/05	SPS	●		**VKDA 35221 T**	**VKD 35030 T**	
1.4	09/03 → 07/05	~~SPS~~, ~~AC~~	●		**VKDA 35220 T**		
1.4	09/03 → 07/05	SPS, AC	●		**VKDA 35221 T**	**VKD 35030 T**	
1.8 130 HGT	09/99 → 07/05		●		**VKDA 35221 T**	**VKD 35030 T**	
1.3 JTD 16V	06/03 → 07/05		●		**VKDA 35220 T**		
1.9 DS 60	09/99 → 07/05		●		**VKDA 35225 T**	**VKD 35030 T**	
1.9 JTD, 1.9 JTD 80	09/99 → 07/05	~~SPS~~	●		**VKDA 35225 T**	**VKD 35030 T**	
1.9 JTD, 1.9 JTD 80	09/99 → 07/05	SPS	●		**VKDA 35221 T**	**VKD 35030 T**	
PUNTO II							
1.2 60	02/00 → 07/05	~~SPS~~	●		**VKDA 35220 T**		
1.2 60	02/00 → 07/05	SPS	●		**VKDA 35221 T**	**VKD 35030 T**	
1.9 D 60, 1.9 JTD	02/00 → 07/05		●		**VKDA 35225 T**	**VKD 35030 T**	
REGATA							
REGATA	09/83 → 12/90		●		**VKDA 37204 T**		**VKDP 31400 T**
REGATA Weekend							
REGATA Weekend	01/84 → 12/90		●		**VKDA 37204 T**		**VKDP 31400 T**
RITMO Bertone							
50 1.3	10/85 → 12/87		●		**VKDA 37204 T**		**VKDP 31400 T**
85 1.5	01/80 → 09/82		●		**VKDA 37201 T**		**VKDP 31400 T**
85 1.5, 100 1.6	10/82 → 12/88		●		**VKDA 37204 T**		**VKDP 31400 T**

RITMO I						
60 1.0, 65 1.3, 75 1.3	01/78 → 09/82	●		**VKDA 37201 T**		**VKDP 31400 T**
70 1.3	11/83 → 08/85	●		**VKDA 37204 T**		**VKDP 31400 T**
75 1.5, 85 1.5	01/78 → 09/82	●		**VKDA 37201 T**		**VKDP 31400 T**
75 1.5, 75 i.e. 1.5	10/82 → 05/87	●		**VKDA 37204 T**		**VKDP 31400 T**
105 Sport 1.6	05/81 → 09/82	●		**VKDA 37201 T**		**VKDP 31400 T**
105 Sport 1.6, 90 i.e. 1.6	10/82 → 12/87	●		**VKDA 37204 T**		**VKDP 31400 T**
125 TC Abarth 2.0	11/81 → 09/82	●		**VKDA 37201 T**		
55 Diesel 1.7	10/79 → 09/82	●		**VKDA 37201 T**		**VKDP 31400 T**
RITMO II						
60 1.1, 70 1.3, 75 1.5, 75 1.5 CAT, 85 1.5, 100 1.6, 105 1.6, 90 1.6 i.e., 125 TC Abarth 2.0, 130 TC Abarth 2.0	10/82 → 12/88	●		**VKDA 37204 T**		
60 1.1, 70 1.3, 75 1.5, 75 1.5 CAT, 85 1.5, 100 1.6, 105 1.6, 90 1.6 i.e.	10/82 → 12/88	●				**VKDP 31400 T**
60 Diesel 1.7, 80 Turbo Diesel 1.9	10/82 → 12/87	●		**VKDA 37204 T**		**VKDP 31400 T**
SCUDO						
SCUDO	02/96 → 07/05	●		**VKDA 35317 T**	**VKD 35018 T**	**VKDP 33301 T**
SEICENTO						
0.9, 1.1	01/98 → 07/05	●		**VKDC 35202 T**		**VKDP 33203 T**
SEICENTO						
SEICENTO	01/98 → 07/05	●		**VKDC 35202 T**		
SIENA						
SIENA	04/96 → 07/05	●		**VKDC 35232 T**		
STILO						
STILO	10/01 → 05/06	●		***VKDA 35233 T***		
1.2 16V, 1.4 16V, 1.6 16V, 1.8 16V, 2.4 20V	10/01 → 06/05	●				**VKDP 33208 T**
1.9 JTD	10/01 → 06/05	●				**VKDP 33208 T**
STILO Multi Wagon						
STILO Multi Wagon	01/03 → 05/06	●		***VKDA 35233 T***		
STRADA						
STRADA	06/99 → 07/05	●		**VKDC 35232 T**		
TEMPRA						
TEMPRA	03/90 → 08/96	●		**VKDA 35200 T**		**VKDP 33202 T**
TEMPRA SW						
TEMPRA SW	03/90 → 08/96	●		**VKDA 35200 T**		
TEMPRA SW	03/90 → 08/96	●				**VKDP 33202 T**
4X4: 2.0 i.e.	03/92 → 03/95	●		**VKDA 35200 T**		

FIAT .../...

4X4: 2.0 i.e.	03/92 → 03/95	~~AAS~~	●			**VKDP 33202 T**
TIPO						
TIPO	01/88 → 08/96		●	**VKDA 35200 T**		**VKDP 33202 T**
ULYSSE (179AX)						
ULYSSE (179AX)	08/02 → 07/05		●	**VKDA 35317 T**	**VKD 35018 T**	—
ULYSSE (220)						
ULYSSE (220)	06/94 → 08/02		●	**VKDA 35317 T**	**VKD 35018 T**	**VKDP 33301 T**
UNO						
UNO	01/83 → 03/04		●	**VKDA 37202 T**		**VKDP 31400 T**
45 0.9, 45, 45 1.0, 45 i.e. 1.0, 55 1.0, 50 1.1, 50 i.e. 1.1, 55 1.1, 60 1.1, 70 1.3	01/83 → 03/04		○	**VKDA 40218 T**		
1.3 Turbo i.e.	04/85 → 03/91		○	**VKDA 40219 T**		
70 i.e. 1.4, 70 S 1.4	09/89 → 12/93		○	**VKDA 40218 T**		
1.4 Turbo i.e.	09/89 → 12/96		○	**VKDA 40219 T**		
75 i.e. 1.5	10/85 → 12/93		○	**VKDA 40218 T**		
1.3 Super Diesel	06/83 → 12/89		○	**VKDA 40218 T**		
70 TD 1.4, 60 Diesel 1.7, 1.9 D	07/86 → 03/94		○	**VKDA 40218 T**		

FIAT

DUCATO I Box						
DUCATO I Box	01/82 → 03/94		●	—	**VKD 35016 T**	
2.0	03/89 → 08/90	1000, 1400Kg	●			**VKDP 33311 T**
1.9 D, 1.9 TD	01/88 → 03/94	1000, 1400Kg	●			**VKDP 33311 T**
2.5 TD	07/90 → 03/94	1000, 1400Kg	●			**VKDP 33311 T**
4X4: DUCATO I	03/89 → 03/94		●	—	**VKD 35016 T**	
4X4: DUCATO I	03/89 → 03/94	1000, 1400Kg	●			**VKDP 33311 T**
DUCATO I Bus						
1.8	07/82 → 12/88		●	—	**VKD 35016 T**	
2.0	07/82 → 03/94		●	—	**VKD 35016 T**	
2.0	01/86 → 03/94		●			**VKDP 33311 T**
1.9 D, 1.9 TD	02/87 → 03/94		●	—	**VKD 35016 T**	**VKDP 33311 T**
2.4 D	07/82 → 12/85		●	—	**VKD 35016 T**	
2.5 D, 2.5 TD	01/86 → 03/94		●	—	**VKD 35016 T**	**VKDP 33311 T**
4X4: DUCATO I	01/86 → 03/94		●	—	**VKD 35016 T**	**VKDP 33311 T**
DUCATO I Flatbed / Chassis						
DUCATO I Flatbed / Chassis	07/82 → 03/94		●	—	**VKD 35016 T**	
2.0	08/88 → 03/94	1000, 1400Kg	●			**VKDP 33311 T**
1.9 D, 1.9 TD, 2.5 D, 2.5 TD	01/88 → 03/94	1000, 1400Kg	●			**VKDP 33311 T**
4X4: DUCATO I	03/89 → 03/94		●	—	**VKD 35016 T**	
4X4: DUCATO I	03/89 → 03/94	1000, 1400Kg	●			**VKDP 33311 T**
DUCATO II						
DUCATO II	03/94 → 04/02		●	**VKDA 35313 T**	**VKD 35017 T**	

DUCATO II ... 03/94 → 04/02 ... 1000, 1400Kg	●					**VKDP 33311 T**
4X4: DUCATO II ... 05/98 → 07/01 ...	●		**VKDA 35313 T**	**VKD 35017 T**		
4X4: DUCATO II ... 05/98 → 04/02 ... 1000, 1400Kg	●					**VKDP 33311 T**
DUCATO II						
DUCATO II ... 03/94 → 04/02 ...	●		**VKDA 35313 T**	**VKD 35017 T**		**VKDP 33311 T**
4X4: DUCATO II ... 04/97 → 07/01 ...	●		**VKDA 35313 T**	**VKD 35017 T**		**VKDP 33311 T**
DUCATO II						
2.0 ... 06/98 → 07/01 ...	●		**VKDA 35313 T**	**VKD 35017 T**		
2.0 ... 06/98 → 04/02 ... 1000, 1400Kg	●					**VKDP 33311 T**
1.9 D, 1.9 TD, 1.9 TD CAT, 2.5 D, 2.5 TDI, 2.8 D, 2.8 JTD, 2.8 TDI ... 03/94 → 07/01 ...	●		**VKDA 35313 T**	**VKD 35017 T**		
1.9 D, 1.9 TD, 1.9 TD CAT, 2.5 D, 2.5 TDI, 2.8 D, 2.8 JTD, 2.8 TDI ... 03/94 → 04/02 ... 1000, 1400Kg	●					**VKDP 33311 T**
4X4: DUCATO II ... 03/94 → 07/01 ...	●		**VKDA 35313 T**	**VKD 35017 T**		
4X4: DUCATO II ... 03/94 → 04/02 ... 1000, 1400Kg	●					**VKDP 33311 T**
DUCATO III						
DUCATO III ... 04/02 → 07/05 ...	●		**VKDA 35321 T**	**VKD 35017 T**		
DUCATO III ... 04/02 → 06/05 ... 1000, 1400Kg	●					**VKDP 33311 T**
4X4: 2.8 JTD ... 07/02 → 07/05 ...	●		**VKDA 35321 T**	**VKD 35017 T**		
4X4: 2.8 JTD ... 07/02 → 06/05 ... 1000, 1400Kg	●					**VKDP 33311 T**
DUCATO III						
DUCATO III ... 04/02 → 07/05 ...	●		**VKDA 35321 T**	**VKD 35017 T**		**VKDP 33311 T**
4X4: 2.8 JTD ... 07/02 → 07/05 ...	●		**VKDA 35321 T**	**VKD 35017 T**		**VKDP 33311 T**
DUCATO III						
DUCATO III ... 04/02 → 07/05 ...	●		**VKDA 35321 T**	**VKD 35017 T**		
DUCATO III ... 04/02 → 06/05 ... 1000, 1400Kg	●					**VKDP 33311 T**
4X4: 2.8 JTD ... 10/02 → 07/05 ...	●		**VKDA 35321 T**	**VKD 35017 T**		
4X4: 2.8 JTD ... 10/02 → 06/05 ... 1000, 1400Kg	●					**VKDP 33311 T**
TALENTO						
TALENTO ... 03/89 → 03/94 ...	●		—	**VKD 35016 T**		**VKDP 33311 T**
FORD						
COUGAR						
COUGAR ... 08/98 → 12/01 ...	●		**VKDA 35402 T**	**VKD 35013 T**		
2.0 16V, 2.5 V6 24V ... 08/98 → 12/01 ...		○	**VKDA 40400 T**			
ESCORT III						
1.1 ... 05/83 → 01/85 ...	●		**VKDA 35409 T**	**VKD 35010 T**		**VKDP 31400 T**
1.1 ... 01/85 → 12/85 ...	●		**VKDA 35403 T**	**VKD 35014 T**		**VKDP 31400 T**
1.3 ... 05/83 → 01/85 ...	●		**VKDA 35409 T**	**VKD 35010 T**		**VKDP 31400 T**
1.3 ... 01/85 → 12/85 ...	●		**VKDA 35403 T**	**VKD 35014 T**		**VKDP 31400 T**
1.6, 1.6 RS Turbo, 1.6 XR3i, RS 1600i ... 05/83 → 01/85 ...	●		**VKDA 35409 T**	**VKD 35010 T**		
1.6, 1.6 i, 1.6 RS Turbo, 1.6 XR3i, RS 1600i ... 01/85 → 07/86 ...	●		**VKDA 35403 T**	**VKD 35014 T**		
1.6 D ... 02/84 → 01/85 ...	●		**VKDA 35409 T**	**VKD 35010 T**		**VKDP 31400 T**

FORD .../...					
1.6 D 01/85 → 12/85	●		VKDA 35403 T	VKD 35014 T	VKDP 31400 T
ESCORT III					
1.1 05/83 → 01/85	●		VKDA 35409 T	VKD 35010 T	
1.1 01/85 → 02/86	●		VKDA 35403 T	VKD 35014 T	
1.3 05/83 → 01/85	●		VKDA 35409 T	VKD 35010 T	
1.3 01/85 → 02/86	●		VKDA 35403 T	VKD 35014 T	
1.6 05/83 → 01/85	●		VKDA 35409 T	VKD 35010 T	
1.6 01/85 → 02/86	●		VKDA 35403 T	VKD 35014 T	
1.6 D 02/84 → 01/85	●		VKDA 35409 T	VKD 35010 T	
1.6 D 01/85 → 02/86	●		VKDA 35403 T	VKD 35014 T	
ESCORT III					
1.3 09/83 → 01/85	●		VKDA 35409 T	VKD 35010 T	VKDP 31400 T
1.3 01/85 → 12/85	●		VKDA 35403 T	VKD 35014 T	VKDP 31400 T
1.6, 1.6 i 09/83 → 01/85	●		VKDA 35409 T	VKD 35010 T	VKDP 31400 T
1.6, 1.6 i 01/85 → 12/85	●		VKDA 35403 T	VKD 35014 T	VKDP 31400 T
ESCORT III					
1.1 05/83 → 01/85	●		VKDA 35409 T	VKD 35010 T	VKDP 31400 T
1.1 01/85 → 12/85	●		VKDA 35403 T	VKD 35014 T	VKDP 31400 T
1.3 05/83 → 01/85	●		VKDA 35409 T	VKD 35010 T	VKDP 31400 T
1.3 01/85 → 12/85	●		VKDA 35403 T	VKD 35014 T	VKDP 31400 T
1.6 05/83 → 01/85	●		VKDA 35409 T	VKD 35010 T	VKDP 31400 T
1.6 01/85 → 12/85	●		VKDA 35403 T	VKD 35014 T	VKDP 31400 T
1.6 D 02/84 → 01/85	●		VKDA 35409 T	VKD 35010 T	VKDP 31400 T
1.6 D 01/85 → 12/85	●		VKDA 35403 T	VKD 35014 T	VKDP 31400 T
ESCORT IV					
ESCORT IV 10/85 → 10/90	●		VKDA 35403 T	VKD 35014 T	VKDP 31400 T
ESCORT IV					
ESCORT IV 02/86 → 07/90	●		VKDA 35403 T	VKD 35014 T	
ESCORT IV					
ESCORT IV 01/86 → 07/90	●		VKDA 35403 T	VKD 35014 T	VKDP 31400 T
ESCORT IV					
ESCORT IV 10/85 → 10/90	●		VKDA 35403 T	VKD 35014 T	VKDP 31400 T
ESCORT V, VI					
ESCORT V, VI 07/90 → 01/95	●		VKDA 35401 T	VKD 35010 T	
1.3, 1.4, 1.6, 1.6 i 16V 07/90 → 01/95	●				VKDP 33401 T
1.8 16V XR3i 02/92 → 12/92	●				VKDP 31400 T
1.8 i 16V 09/92 → 01/95	●				VKDP 33401 T
1.8 D 07/90 → 01/95	●				VKDP 33401 T
4X4: 1.8 XR3i 16V, RS 2000 08/93 → 01/95	●		VKDA 35401 T	VKD 35010 T	
4X4: RS Cosworth 09/92 → 01/95	●		VKDA 35406 T	VKD 35014 T	
ESCORT V, VI 07/90 → 01/95		○	VKDA 40407 T		
4X4: ESCORT V, VI 09/92 → 01/95		○	VKDA 40407 T		

ESCORT V, VI							
ESCORT V, VI	07/90 → 12/94	●		**VKDA 35401 T**	**VKD 35010 T**	
ESCORT V, VI							
ESCORT V, VI	07/90 → 01/95	●		**VKDA 35401 T**	**VKD 35010 T**	
ESCORT V, VI	07/90 → 01/95		○	**VKDA 40407 T**		
ESCORT V, VI							
ESCORT V, VI	07/90 → 01/95	●		**VKDA 35401 T**	**VKD 35010 T**	**VKDP 33401 T**
ESCORT V, VI							
ESCORT V, VI	08/93 → 01/95	●		**VKDA 35401 T**	**VKD 35010 T**	**VKDP 33401 T**
ESCORT V, VI	08/93 → 01/95		○	**VKDA 40407 T**		
ESCORT VII							
1.3, 1.4, 1.6 16V, 1.6 i 16V, 1.8 16V, RS 2000	01/95 → 10/98	●		**VKDA 35405 T**		
1.3, 1.4, 1.6 16V, 1.6 i 16V, 1.8 16V	01/95 → 10/98	●				**VKDP 33401 T**
1.8 D, 1.8 TD, 1.8 Turbo D	01/95 → 10/98	●		**VKDA 35405 T**		**VKDP 33401 T**
4X4: 1.6 16V, RS 2000	01/95 → 10/98	●		**VKDA 35405 T**		
4X4: RS Cosworth	02/95 → 10/98	●		**VKDA 35406 T**	**VKD 35014 T**	
1.3, 1.4, 1.6 16V, 1.6 i 16V, 1.8 16V	01/95 → 10/98 FWD		○	**VKDA 40407 T**		**VKDP 43400 T**
1.8 D, 1.8 TD, 1.8 Turbo D	01/95 → 10/98 FWD		○	**VKDA 40407 T**		**VKDP 43400 T**
ESCORT VII							
ESCORT VII	01/95 → 08/05	●		**VKDA 35405 T**		
ESCORT VII	01/95 → 08/05		○	**VKDA 40407 T**		
ESCORT VII							
ESCORT VII	02/95 → 08/00	●		**VKDA 35405 T**		
ESCORT VII	02/95 → 08/00 FWD		○	**VKDA 40407 T**		
ESCORT VII							
ESCORT VII	01/95 → 02/99	●		**VKDA 35405 T**		**VKDP 33401 T**
ESCORT VII							
ESCORT VII	01/95 → 02/99	●		**VKDA 35405 T**		**VKDP 33401 T**
ESCORT VII	01/95 → 02/99		○			**VKDP 43400 T**
ESCORT VII CLASSIC							
ESCORT VII CLASSIC	10/98 → 07/00	●		**VKDA 35405 T**		
ESCORT VII CLASSIC							
ESCORT VII CLASSIC	02/99 → 07/00	●		**VKDA 35405 T**		
FESTIVA							
1.3 B3	01/88 → 12/93	●		**VKDA 88401 T**		

FORD .../...					
FIESTA I					
FIESTA I 05/76 → 08/83	●				**VKDP 31400 T**
FIESTA II					
1.0 09/83 → 01/85	●		**VKDA 35409 T**	**VKD 35010 T**	**VKDP 31400 T**
1.0 01/85 → 11/89	●		**VKDA 35403 T**	**VKD 35014 T**	**VKDP 31400 T**
1.1 09/83 → 01/85	●		**VKDA 35409 T**	**VKD 35010 T**	**VKDP 31400 T**
1.1 01/85 → 02/89	●		**VKDA 35403 T**	**VKD 35014 T**	**VKDP 31400 T**
1.3 09/83 → 01/85	●		**VKDA 35409 T**	**VKD 35010 T**	**VKDP 31400 T**
1.3 01/85 → 01/87	●		**VKDA 35403 T**	**VKD 35014 T**	**VKDP 31400 T**
1.4 09/83 → 01/85	●		**VKDA 35409 T**	**VKD 35010 T**	**VKDP 31400 T**
1.4 01/85 → 11/89	●		**VKDA 35403 T**	**VKD 35014 T**	**VKDP 31400 T**
1.6 XR2 03/84 → 01/85	●		**VKDA 35409 T**	**VKD 35010 T**	**VKDP 31400 T**
1.6 XR2 01/85 → 02/89	●		**VKDA 35403 T**	**VKD 35014 T**	**VKDP 31400 T**
1.6 D 04/84 → 01/85	●		**VKDA 35409 T**	**VKD 35010 T**	**VKDP 31400 T**
1.6 D 12/84 → 02/89	●		**VKDA 35403 T**	**VKD 35014 T**	**VKDP 31400 T**
FIESTA II					
1.0 08/83 → 01/85	●		**VKDA 35409 T**	**VKD 35010 T**	**VKDP 31400 T**
1.0 01/85 → 11/89	●		**VKDA 35403 T**	**VKD 35014 T**	**VKDP 31400 T**
1.1 08/83 → 01/85	●		**VKDA 35409 T**	**VKD 35010 T**	**VKDP 31400 T**
1.1 01/85 → 11/86	●		**VKDA 35403 T**	**VKD 35014 T**	**VKDP 31400 T**
1.8 D 03/89 → 07/95	●		**VKDA 35403 T**	**VKD 35014 T**	**VKDP 33401 T**
1.8 D 08/95 → 12/95	●		**VKDA 35407 T**	**VKD 35034 T**	**VKDP 33401 T**
FIESTA III					
FIESTA III 01/89 → 12/95	●		**VKDA 35403 T**	**VKD 35014 T**	
1.0, 1.1, 1.3, 1.3 CAT, 1.4, 1.4 CAT, 1.6, 1.6 i 16V 01/89 → 12/95	●				**VKDP 31400 T**
1.8 D 03/89 → 12/95	●				**VKDP 31400 T**
FIESTA III 01/89 → 12/95		○	**VKDA 40407 T**		
FIESTA III					
1.3 09/91 → 07/95	●		**VKDA 35403 T**	**VKD 35014 T**	**VKDP 31400 T**
1.3 08/95 → 02/96	●		**VKDA 35407 T**	**VKD 35034 T**	**VKDP 31400 T**
1.8 D 09/91 → 07/95	●		**VKDA 35406 T**	**VKD 35014 T**	**VKDP 31400 T**
1.8 D 08/95 → 02/96	●		**VKDA 35407 T**	**VKD 35034 T**	**VKDP 31400 T**
FIESTA III 09/91 → 02/96		○	**VKDA 40407 T**		
FIESTA IV					
FIESTA IV 08/95 → 01/02	●		**VKDA 35407 T**	**VKD 35034 T**	**VKDP 33401 T**
1.0 i, 1.25 i 16V, 1.3 i, 1.4 i 16V, 1.6 16V Sport 08/95 → 01/02		○	**VKDA 40401 T**		
1.0 i, 1.25 i 16V, 1.3 i, 1.4 i 16V 08/95 → 01/02		○			**VKDP 43400 T**
1.8 D, 1.8 DI 08/95 → 01/02		○	**VKDA 40401 T**		**VKDP 43400 T**
FIESTA IV					
1.3, 1.4 i 02/96 → 08/05	●		**VKDA 35407 T**	**VKD 35034 T**	**VKDP 33401 T**
1.8 D, 1.8 DI, D 1.8 02/96 → 08/05	●		**VKDA 35407 T**	**VKD 35034 T**	**VKDP 33401 T**
FIESTA V					
FIESTA V 11/01 → 08/05	●		**VKDA 35424 T**		

FIESTA V		11/01 → 08/05			○	VKDA 40416 T		
FOCUS I								
1.4 16V, 1.6 16V, 1.8 16V, 2.0 16V		10/98 → 11/04	Man. GBX	●		VKDA 35417 T		VKDP 33402 T
1.4 16V, 1.6 16V, 1.8 16V, 2.0 16V		10/98 → 11/04	Auto. GBX	●		VKDA 35425 T		VKDP 33402 T
1.8 DI / TDDi, 1.8 TDCi, 1.8 Turbo DI / TDDi		10/98 → 11/04	Man. GBX	●		VKDA 35417 T		VKDP 33402 T
1.8 DI / TDDi, 1.8 TDCi, 1.8 Turbo DI / TDDi		10/98 → 11/04	Auto. GBX	●		VKDA 35425 T		VKDP 33402 T
1.4 16V, 1.6 16V, 1.8 16V, 2.0 16V		10/98 → 11/04			○	VKDA 40404 T		VKDP 44400 T
1.8 DI / TDDi, 1.8 TDCi, 1.8 Turbo DI / TDDi		10/98 → 11/04			○	VKDA 40404 T		VKDP 44400 T
FOCUS I								
1.4 16V, 1.6 16V, 1.8 16V, 2.0 16V		02/99 → 11/04	Man. GBX	●		VKDA 35417 T		VKDP 33402 T
1.4 16V, 1.6 16V, 1.8 16V, 2.0 16V		02/99 → 11/04	Auto. GBX	●		VKDA 35425 T		VKDP 33402 T
1.8 DI / TDDi, 1.8 TDCi, 1.8 Turbo DI / TDDi		02/99 → 11/04	Man. GBX	●		VKDA 35417 T		VKDP 33402 T
1.8 DI / TDDi, 1.8 TDCi, 1.8 Turbo DI / TDDi		02/99 → 11/04	Auto. GBX	●		VKDA 35425 T		VKDP 33402 T
1.4 16V, 1.6 16V, 1.8 16V, 2.0 16V		02/99 → 11/04			○			VKDP 44400 T
1.8 DI / TDDi, 1.8 TDCi, 1.8 Turbo DI / TDDi		02/99 → 11/04			○			VKDP 44400 T
FOCUS I								
1.4 16V, 1.6 16V, 1.8 16V, 2.0 16V		02/99 → 11/04	Man. GBX	●		VKDA 35417 T		VKDP 33402 T
1.4 16V, 1.6 16V, 1.8 16V, 2.0 16V		02/99 → 11/04	Auto. GBX	●		VKDA 35425 T		VKDP 33402 T
1.8 TDCi, 1.8 Turbo DI / TDDi		02/99 → 11/04	Man. GBX	●		VKDA 35417 T		VKDP 33402 T
1.8 TDCi, 1.8 Turbo DI / TDDi		02/99 → 11/04	Auto. GBX	●		VKDA 35425 T		VKDP 33402 T
FOCUS I		02/99 → 11/04			○	VKDA 40404 T		VKDP 44400 T
FOCUS II								
FOCUS II		11/04 → 01/06		●		—	VKD 35035 T	
FOCUS II		11/04 → 05/06			○	VKDA 40415 T		
FOCUS II								
FOCUS II		11/04 → 01/06		●		—	VKD 35035 T	
FOCUS II								
FOCUS II		04/05 → 01/06		●		—	VKD 35035 T	
FOCUS II		04/05 → 08/05			○	VKDA 40415 T		
FOCUS II C-MAX								
1.6		10/03 → 12/03		●		—	VKD 35035 T	—
1.6		12/03 → 07/04		●		—	VKD 35035 T	—
1.6		07/04 → 01/06		●		—	VKD 35035 T	—
1.8		10/03 → 12/03		●		—	VKD 35035 T	—
1.8		12/03 → 07/04		●		—	VKD 35035 T	—

FORD .../...

1.8	07/04 → 01/06	●		—	**VKD 35035 T**	—
2.0	04/04 → 07/04	●		—	**VKD 35035 T**	—
2.0	07/04 → 01/06	●		—	**VKD 35035 T**	—
1.6 TDCi	10/03 → 12/03	●		—	**VKD 35035 T**	—
1.6 TDCi	12/03 → 07/04	●		—	**VKD 35035 T**	—
1.6 TDCi	07/04 → 01/06	●		—	**VKD 35035 T**	—
2.0 TDCi	10/03 → 12/03	●		—	**VKD 35035 T**	—
2.0 TDCi	12/03 → 07/04	●		—	**VKD 35035 T**	—
2.0 TDCi	07/04 → 01/06	●		—	**VKD 35035 T**	—
1.6, 1.8, 2.0	10/03 → 01/06		○	**VKDA 40415 T**		
1.6 TDCi, 2.0 TDCi	10/03 → 01/06		○	**VKDA 40415 T**		

FUSION

FUSION	08/02 → 08/05	●		**VKDA 35424 T**		
FUSION	08/02 → 08/05		○	**VKDA 40416 T**		

GALAXY

GALAXY	03/95 → 08/05	●		**VKDA 35110 T**		**VKDP 33405 T**
4X4: 2.8 i V6	04/96 → 04/00	●		**VKDA 35110 T**		**VKDP 33405 T**

KA

KA	09/96 → 08/05	●		**VKDA 35407 T**	**VKD 35034 T**	
KA	09/96 → 08/05		○	**VKDA 40401 T**		

MONDEO I

MONDEO I	02/93 → 08/96	●		**VKDA 35402 T**	**VKD 35013 T**	**VKDP 33400 T**
4X4: MONDEO I	02/93 → 08/96	●		**VKDA 35402 T**	**VKD 35013 T**	
4X4: MONDEO I	02/93 → 08/96 ~~AAS~~	●				**VKDP 33400 T**
MONDEO I	02/93 → 08/96		○	**VKDA 40400 T**		**VKDP 43403 T**
4X4: MONDEO I	02/93 → 08/96		○	**VKDA 40400 T**		
4X4: MONDEO I	02/93 → 08/96 ~~AAS~~		○			**VKDP 43403 T**

MONDEO I

MONDEO I	01/93 → 08/96	●		**VKDA 35402 T**	**VKD 35013 T**	**VKDP 33400 T**
4X4: MONDEO I	04/93 → 08/96	●		**VKDA 35402 T**	**VKD 35013 T**	**VKDP 33400 T**
MONDEO I	01/93 → 08/96		○			VKDP_____
4X4: MONDEO I	04/93 → 08/96		○			VKDP_____

MONDEO I

MONDEO I	02/93 → 08/96	●		**VKDA 35402 T**	**VKD 35013 T**	**VKDP 33400 T**
4X4: MONDEO I	12/94 → 08/96	●		**VKDA 35402 T**	**VKD 35013 T**	
4X4: MONDEO I	12/94 → 08/96 ~~AAS~~	●				**VKDP 33400 T**
MONDEO I	02/93 → 08/96		○	**VKDA 40400 T**		**VKDP 43403 T**
4X4: MONDEO I	12/94 → 08/96		○	**VKDA 40400 T**		
4X4: MONDEO I	12/94 → 08/96 ~~AAS~~		○			**VKDP 43403 T**

MONDEO II

MONDEO II	09/96 → 11/00	●		**VKDA 35402 T**	**VKD 35013 T**	**VKDP 33400 T**
MONDEO II	09/96 → 11/00		○	**VKDA 40400 T**		**VKDP 43403 T**

MONDEO II

MONDEO II	09/96 → 11/00	●		**VKDA 35402 T**	**VKD 35013 T**	**VKDP 33400 T**

MONDEO II ... 09/96 → 11/00 ...		○				VKDP____
MONDEO II						
MONDEO II ... 09/96 → 11/00 ...	●		**VKDA 35402 T**	**VKD 35013 T**	**VKDP 33400 T**
MONDEO II ... 09/96 → 11/00 ...		○	**VKDA 40400 T**		**VKDP 43403 T**
MONDEO III						
1.8 16V, 1.8 SCi, 2.0 16V, 2.5 V6 24V, 3.0 V6 24V, ST220 ... 11/00 → 08/05 ...	●		**VKDA 35418 T**	—	
1.8 16V, 1.8 SCi, 2.0 16V, 2.5 V6 24V ... 11/00 → 02/06 ... ~~SPS~~ ...	●				**VKDP 33411 T**
2.0 16V DI / TDDi, 2.0 16V TDDi / TDCi, 2.0 TDCi ... 11/00 → 08/05 ...	●		**VKDA 35418 T**	—	
2.0 16V DI / TDDi, 2.0 16V TDDi / TDCi, 2.0 TDCi ... 11/00 → 02/06 ... ~~SPS~~ ...	●				**VKDP 33411 T**
1.8 16V, 1.8 SCi, 2.0 16V, 2.5 V6 24V, 3.0 V6 24V ... 11/00 → 08/05 ...		○	VKDA____		
1.8 16V, 1.8 SCi, 2.0 16V, 2.5 V6 24V, 3.0 V6 24V ... 11/00 → 02/06 ... ~~SPS~~, ~~HD~~ ...		○			**VKDP 43407 T**
ST220 ... 04/02 → 08/05 ...		○	—		
2.0 16V DI / TDDi, 2.0 16V TDDi / TDCi, 2.0 TDCi, 2.2 TDCi ... 11/00 → 08/05 ...		○	VKDA____		
2.0 16V DI / TDDi, 2.0 16V TDDi / TDCi, 2.0 TDCi, 2.2 TDCi ... 11/00 → 02/06 ... ~~SPS~~, ~~HD~~ ...		○			**VKDP 43407 T**
MONDEO III						
MONDEO III ... 11/00 → 08/05 ...	●		**VKDA 35418 T**	—	
1.8 16V, 1.8 SCi, 2.0 16V, 2.5 V6 24V ... 11/00 → 02/06 ... ~~SPS~~ ...	●				**VKDP 33411 T**
2.0 16V DI / TDDi, 2.0 16V TDDi / TDCi, 2.0 TDCi ... 11/00 → 02/06 ... ~~SPS~~ ...	●				**VKDP 33411 T**
MONDEO III						
MONDEO III ... 11/00 → 08/05 ...	●		**VKDA 35418 T**	—	
1.8 16V, 1.8 SCi, 2.0 16V, 2.5 V6 24V ... 11/00 → 02/06 ... ~~SPS~~ ...	●				**VKDP 33411 T**
2.0 16V DI / TDDi, 2.0 16V TDDi / TDCi, 2.0 TDCi ... 11/00 → 02/06 ... ~~SPS~~ ...	●				**VKDP 33411 T**
1.8 16V, 1.8 SCi, 2.0 16V, 2.5 V6 24V, 3.0 V6 24V ... 11/00 → 08/05 ...		○	VKDA____		
1.8 16V, 1.8 SCi, 2.0 16V, 2.5 V6 24V, 3.0 V6 24V ... 11/00 → 02/06 ... ~~SPS~~, ~~HD~~ ...		○			**VKDP 43407 T**
ST220 ... 04/02 → 08/05 ...		○	—		
2.0 16V DI / TDDi, 2.0 16V TDDi / TDCi, 2.0 TDCi, 2.2 TDCi ... 11/00 → 08/05 ...		○	VKDA____		
2.0 16V DI / TDDi, 2.0 16V TDDi / TDCi, 2.0 TDCi, 2.2 TDCi ... 11/00 → 02/06 ... ~~SPS~~, ~~HD~~ ...		○			**VKDP 43407 T**
ORION I						
1.3 ... 07/83 → 01/85 ...	●		**VKDA 35409 T**	**VKD 35010 T**	**VKDP 31400 T**
1.3 ... 01/85 → 03/86 ...	●		**VKDA 35403 T**	**VKD 35014 T**	**VKDP 31400 T**
1.6, 1.6 i ... 07/83 → 01/85 ...	●		**VKDA 35409 T**	**VKD 35010 T**	**VKDP 31400 T**

FORD .../...

1.6, 1.6 i	01/85 → 03/86	●		**VKDA 35403 T**	**VKD 35014 T**	**VKDP 31400 T**
1.6 D	02/84 → 01/85	●		**VKDA 35409 T**	**VKD 35010 T**	**VKDP 31400 T**
1.6 D	01/85 → 03/86	●		**VKDA 35403 T**	**VKD 35014 T**	**VKDP 31400 T**
ORION II						
ORION II	12/85 → 07/90	●		**VKDA 35403 T**	**VKD 35014 T**	**VKDP 31400 T**
ORION III						
ORION III	07/90 → 12/93	●		**VKDA 35401 T**	**VKD 35010 T**	**VKDP 33401 T**
ORION III	07/90 → 12/93		○	**VKDA 40407 T**		
PUMA						
PUMA	03/97 → 08/05	●		**VKDA 35407 T**	**VKD 35034 T**	
PUMA	03/97 → 08/05		○	**VKDA 40401 T**		**VKDP 43400 T**
SCORPIO I						
1.8, 2.0, 2.0 i	04/85 → 01/92	●		**VKDA 35400 T**	**VKD 35010 T**	**VKDP 33405 T**
2.0 i	02/92 → 09/94	●		**VKDA 35416 T**		**VKDP 33405 T**
2.4 i, 2.4 i CAT, 2.8 i, 2.9 i, 2.9 i 24V, 2.9 i CAT	04/85 → 01/92	●		**VKDA 35400 T**	**VKD 35010 T**	
2.9 i, 2.9 i 24V	02/92 → 09/94	●		**VKDA 35416 T**		
2.5 D, 2.5 TD	12/85 → 01/92	●		**VKDA 35400 T**	**VKD 35010 T**	**VKDP 33405 T**
2.5 TD	02/92 → 09/94	●		**VKDA 35416 T**		**VKDP 33405 T**
4X4: SCORPIO I	10/85 → 01/92	●		**VKDA 35400 T**	**VKD 35010 T**	
4X4: 2.9 i	02/92 → 09/94	●		**VKDA 35416 T**		
1.8, 2.0, 2.0 i, 2.4 i, 2.4 i CAT, 2.8 i, 2.9 i, 2.9 i 24V, 2.9 i CAT	04/85 → 09/94		○	—		
2.5 D	12/85 → 02/92		○	—		
4X4: SCORPIO I	10/85 → 09/94		○	—		
SCORPIO I						
2.0 i	09/91 → 01/92	●		**VKDA 35400 T**	**VKD 35010 T**	
2.0 i	02/92 → 09/94	●		**VKDA 35416 T**		
2.4 i	09/91 → 01/92	●		**VKDA 35400 T**	**VKD 35010 T**	
2.4 i	02/92 → 09/94	●		**VKDA 35416 T**		
2.9 i	09/91 → 01/92	●		**VKDA 35400 T**	**VKD 35010 T**	
2.9 24V, 2.9 i	02/92 → 09/94	●		**VKDA 35416 T**		
2.5 TD	09/91 → 01/92	●		**VKDA 35400 T**	**VKD 35010 T**	
2.5 TD	02/92 → 09/94	●		**VKDA 35416 T**		
4X4: 2.9 i	05/88 → 01/92	●		**VKDA 35400 T**	**VKD 35010 T**	
4X4: 2.9 i	02/92 → 02/93	●		**VKDA 35416 T**		
SCORPIO I						
2.0 i	05/89 → 01/92	●		**VKDA 35400 T**	**VKD 35010 T**	**VKDP 33405 T**
2.0 i	02/92 → 09/94	●		**VKDA 35416 T**		**VKDP 33405 T**
2.4 i, 2.9 i, 2.9 i 24V	09/86 → 01/92	●		**VKDA 35400 T**	**VKD 35010 T**	
2.9 i, 2.9 i 24V	02/92 → 12/94	●		**VKDA 35416 T**		
2.5 TD	06/88 → 01/92	●		**VKDA 35400 T**	**VKD 35010 T**	**VKDP 33405 T**
2.5 D, 2.5 TD	02/92 → 12/94	●		**VKDA 35416 T**		**VKDP 33405 T**
4X4: 2.9 i	12/89 → 01/92	●		**VKDA 35400 T**	**VKD 35010 T**	
2.0 i, 2.4 i, 2.9 i, 2.9 i 24V	09/86 → 12/94		○	—		
2.5 D	12/89 → 12/94		○	—		
4X4: 2.9 i	12/89 → 10/94		○	—		

SCORPIO II								
SCORPIO II	10/94 → 08/98		●		—	**VKD 35013 T**		
2.0 i, 2.0 i 16V, 2.3 i 16V, 2.9 i, 2.9 i 24V	10/94 → 08/98			○	—			
SCORPIO II								
SCORPIO II	10/94 → 08/98		●		—	**VKD 35013 T**		
SIERRA								
SIERRA	01/87 → 02/93		●		**VKDA 35403 T**	**VKD 35014 T**	**VKDP 33409 T**	
4X4: 2.0	01/90 → 02/93		●		**VKDA 35403 T**	**VKD 35014 T**		
4X4: 2.0, 2.9	08/88 → 02/93		●		**VKDA 35403 T**	**VKD 35014 T**		
SIERRA	01/87 → 02/93			○	—			
4X4: 2.0	01/90 → 02/93			○	—			
4X4: 2.0, 2.9	08/88 → 02/93			○	—			
SIERRA								
1.6, 1.6 i, 1.8, 2.0, 2.0 i, 2.0 i CAT, 2.3, 2.8 i, 2.8 XR4i, 2.9, 2.9 i	01/84 → 02/93		●		**VKDA 35403 T**	**VKD 35014 T**		
1.6, 1.6 i, 1.8, 2.0, 2.0 i, 2.0 i CAT, 2.3, 2.8 i, 2.9, 2.9 i	08/82 → 02/93		●				**VKDP 33409 T**	
1.8 TD, 2.3 D	01/84 → 02/93		●		**VKDA 35403 T**	**VKD 35014 T**	**VKDP 33409 T**	
4X4: SIERRA	08/82 → 02/93		●		**VKDA 35403 T**	**VKD 35014 T**		
SIERRA								
1.3, 1.6, 1.6 i, 1.8, 2.0, 2.0 i, 2.0 i CAT, 2.0 RS Cosworth, 2.3, 2.8 i, 2.8 XR4i, 2.9 i	01/84 → 02/93		●		**VKDA 35403 T**	**VKD 35014 T**		
1.3, 1.6, 1.6 i, 1.8, 2.0, 2.0 i, 2.0 i CAT, 2.3, 2.8 i, 2.9 i	08/82 → 02/93		●				**VKDP 33409 T**	
1.8 TD, 2.3 D	01/84 → 02/93		●		**VKDA 35403 T**	**VKD 35014 T**	**VKDP 33409 T**	
4X4: 2.0 16V Cosworth CAT	01/90 → 02/93		●		**VKDA 35403 T**	**VKD 35014 T**		
4X4: 2.0 16V Cosworth, 2.8 i XR, 2.8 XR, 2.9 i XR	09/83 → 02/93		●		**VKDA 35403 T**	**VKD 35014 T**		
SIERRA	08/82 → 02/93			○	—			
4X4: 2.0 16V Cosworth CAT	01/90 → 02/93			○	—			
4X4: 2.0 16V Cosworth, 2.8 i XR, 2.8 XR, 2.9 i XR	09/83 → 02/93			○	—			
STREET KA								
1.6	05/03 → 08/05		●		**VKDA 35407 T**	**VKD 35034 T**		
FORD								
P 100 II								
P 100 II	10/87 → 06/04		●		**VKDA 35403 T**	**VKD 35014 T**		
TRANSIT I								
2.0, 2.0 CNG, 2.0 i	01/92 → 03/00		●		**VKDA 35415 T**			
2.9 i	01/91 → 06/04		●		**VKDA 35415 T**			
2.5 DI, 2.5 TD, 2.5 TDI	01/92 → 06/04		●		**VKDA 35415 T**			
TRANSIT II								
TRANSIT II	01/00 → 06/04		●		**VKDA 35423 T**	**VKD 35013 T**	**VKDP 33410 T**	

HONDA								
CIVIC IV								
CIVIC IV			10/91 → 01/97	●				***VKDP 83300 T***
1.6 (ES5), 1.7 (ES1)			02/01 → 09/01	●		VKDA____	—	
1.5 (ES8)	D15Y		01/01 → 12/02	●		VKDA____	—	
CONCERTO								
1.4, 1.5 i 16V, 1.6 16V, 1.6 i 16V			08/89 → 03/95	●				***VKDP 83301 T***
1.8 TD			08/94 → 10/96	●				***VKDP 83301 T***
1.4, 1.5 i 16V, 1.6 16V, 1.6 i 16V			08/89 → 03/95		○			***VKDP 93300 T***
1.8 TD			08/94 → 10/96		○			***VKDP 93300 T***
FIT								
1.3 (GD1), 1.5 (GD3)			01/02 → 12/05	●		—	**VKD 35030 T**	
1.4 (GD1)			01/02 → 12/04	●		—	**VKD 35030 T**	
JAZZ								
1.3 (GD1)			01/02 → 12/05	●		—	**VKD 35030 T**	
1.4 (GD1)			03/02 → 12/04	●		VKDA____	**VKD 35030 T**	
1.5 (GD3)			01/02 → 12/05	●		—	**VKD 35030 T**	
HYUNDAI								
ATOS								
ATOS			07/01 → 12/03	●		—		
COUPE								
COUPE			09/01 → 02/06	●		—	**VKD 35002 T**	
ELANTRA								
1.5 (JF2J#, JF3J#, KF2J#, KF3J#), 1.6 (JF2R#, JF3R#, KF3R#), 1.8 (JF3M#, KF3M#)			12/90 → 09/94	●		**VKDC 81503 T**		
GETZ								
GETZ			09/02 → 02/05	●		—		
LANTRA								
1.5 i.e.			12/90 → 09/94	●		**VKDC 81503 T**		
1.6 i.e. 16V			11/91 → 06/92	●		**VKDC 81503 T**		
1.8 i.e. 16V			06/92 → 09/94	●		**VKDC 81503 T**		
PONY/EXCEL								
PONY/EXCEL		CH KMHV →	01/90 → 01/95	●				**VKDP 33401 T**
S COUPE								
S COUPE			02/90 → 05/96	●				**VKDP 33401 T**

SANTA FE								
2.2		11/05 → 02/06			●		—	***VKD 75003 T***
4X4: 2.7 V6		11/05 → 02/06			●		—	***VKD 75003 T***
SANTAMO								
2.0 16V		02/95 → 12/99			●		**VKDC 81505 T**	
4X4: 2.0 16V		02/95 → 12/99			●		**VKDC 81505 T**	
KIA								
CAPITAL								
1.5 (K9#)		05/90 → 01/94			●		**VKDA 88402 T**	
1.8 (K9#)		05/90 → 01/94	Man. GBX		●		**VKDA 88402 T**	
CONCORD								
1.8 (K9#), 2.0 (K9#)		11/93 → 09/94	~~AAS~~		●		**VKDA 88402 T**	
PRIDE								
1.3		01/88 → 12/93			●		**VKDA 88401 T**	
LADA								
FORMA / SAMARA								
FORMA / SAMARA		01/86 → 01/05			●			**VKDP 33108 T**
LANCIA								
DEDRA								
DEDRA		04/89 → 07/99			●		**VKDA 35200 T**	**VKDP 33202 T**
INTEGRALE: DEDRA		05/90 → 07/94			●		**VKDA 35200 T**	**VKDP 33202 T**
DEDRA SW								
DEDRA SW		07/94 → 07/99			●		**VKDA 35200 T**	**VKDP 33202 T**
INTEGRALE: 2.0		07/94 → 07/99			●		**VKDA 35200 T**	**VKDP 33202 T**
DELTA I								
1.3, 1.5, 1.6 GT i.e.,								
1.6 HF Turbo		01/86 → 12/92			●		**VKDC 35207 T**	
1.9 Turbo DS		10/86 → 12/89			●		VKDC 35209	
INTEGRALE: 2.0 16V HF,								
2.0 HF		01/87 → 12/92	→| CH	0412353	●		VKDC 35209	
DELTA II								
DELTA II		06/93 → 08/99			●		**VKDA 35200 T**	
1.4 i.e., 1.6 i.e., 1.6 i.e. 16V,								
1.8 i.e., 1.8 i.e. 16V,								
1.8 i.e. 16V GT, 2.0 16V		06/93 → 08/99			●			**VKDP 33202 T**
KAPPA								
KAPPA		08/94 → 10/01			●		—	**VKD 35020 T**

LANCIA .../...						
KAPPA						
KAPPA	07/96 → 03/01	●		—	**VKD 35020 T**	
KAPPA SW						
KAPPA SW	07/96 → 10/01	●		—	**VKD 35020 T**	
LYBRA						
LYBRA	07/99 → 07/05	●		—	**VKD 35018 T**	
LYBRA SW						
LYBRA SW	07/99 → 07/05	●		—	**VKD 35018 T**	
MUSA						
1.4	10/04 → 07/05	●		—		
1.3 Multijet, 1.9 Multijet	10/04 → 07/05	●		**VKDA 35225 T**	**VKD 35030 T**	
PHEDRA						
PHEDRA	09/02 → 07/05	●		**VKDA 35317 T**	**VKD 35018 T**	
PRISMA						
1.3, 1.5	01/86 → 12/89	●		**VKDC 35207 T**		
1.6, 1.6 i.e., 1.6 i.e. Super	05/86 → 12/89 ⊖	●		VKDC 35209		
1.6, 1.6 i.e., 1.6 i.e. Super	05/86 → 12/89 ⌀	●		**VKDC 35207 T**		
1.9 Turbo Diesel	01/86 → 12/89	●		VKDC 35209		
1.9 Diesel	01/86 → 12/89	●		**VKDC 35207 T**		
4X4: 2.0 i.e. 4WD	04/86 → 12/89	●		VKDC 35209		
THEMA						
2000 i.e. Turbo, 2000 i.e.Turbo, 2850 V6 i.e.	11/84 → 12/88	●		**VKDC 35214 T**		
2000 i.e.	11/84 → 12/88 Auto. GBX	●		**VKDC 35213 T**		
2000 16V, 2000 16V Turbo, 2000 i.e, 2000 i.e., 2000 i.e. 16V, 2000 i.e. 16V Turbo, 2000 i.e. Turbo, 2000 i.e.Turbo, 2850 V6 i.e., 3000 V6	11/84 → 07/94 ~~AAS~~	●				—
2000 i.e, 2000 i.e.	01/88 → 05/92 ~~AC~~, ⌀	●		**VKDC 35213 T**		
2000 i.e, 2000 i.e.	01/88 → 05/92 AC, ⊖	●		**VKDC 35214 T**		
3000 V6	08/92 → 07/94 ~~HD~~	●		**VKDC 35214 T**		
2500 Turbo D, 2500 Turbo DS	11/84 → 07/94	●		**VKDC 35214 T**		
2500 Turbo D, 2500 Turbo DS	11/84 → 07/94 ~~AAS~~	●				—
2000 16V, 2000 16V Turbo, 2000 i.e, 2000 i.e., 2000 i.e. 16V, 2000 i.e. 16V Turbo, 2000 i.e. Turbo, 2000 i.e.Turbo, 2850 V6 i.e.	11/84 → 07/94 ~~AAS~~		○			—

2000 16V, 2000 16V Turbo, 2000 i.e, 2000 i.e., 2000 i.e. 16V, 2000 i.e. 16V Turbo, 2850 V6 i.e., 8.32, 3000 V6	09/87 → 07/94	~~HD~~		○	**VKDA 40208 T**		
2000 i.e.Turbo	01/88 → 05/90	~~HD~~		○	**VKDA 40208 T**		
3000 V6	08/92 → 07/94	~~AAS~~		○			—
2500 Turbo D, 2500 Turbo DS	11/84 → 07/94	~~AAS~~		○			—
2500 Turbo DS	05/88 → 07/92	~~HD~~		○	**VKDA 40208 T**		
2500 Turbo DS	05/92 → 07/94			○	**VKDA 40208 T**		
THEMA SW							
2000 16V	05/92 → 07/94			●		**VKDC 35214 T**	
3000 V6	09/92 → 07/94	~~HD~~		●		**VKDC 35214 T**	
THEMA SW	03/87 → 04/97	~~AAS~~		●			—
2500 Turbo DS	03/87 → 04/97			●		**VKDC 35214 T**	
THEMA SW	03/87 → 04/97	~~AAS~~		○			—
Y							
1.1 (840AE)	11/95 → 03/04	→| CH 03301656		●		VKDC 35205	
1.1 (840AE), 1.2 16V (840AD), 1.4 12V (840AB, 840AC)	11/95 → 03/04	CH 03301656 |→		●		**VKDC 35203 T**	
1.2 16V (840AD), 1.4 12V (840AB, 840AC)	03/96 → 03/04	→| CH 03301656		●		VKDC 35206	
1.2 (840AF1A), 1.2 16V (840AG1A)	03/96 → 03/04			●		**VKDC 35203 T**	
1.2 (840AA)	03/96 → 03/04	CH 03301656 |→		●		**VKDC 35203 T**	
1.2 (840AA)	03/96 → 03/04	→| CH 03301656, ⊖		●		VKDC 35206	
1.2 (840AA)	03/96 → 03/04	→| CH 03301656, ⊘		●		VKDC 35205	
Y10							
Y10	03/85 → 12/95			●		VKDA 37200 T		**VKDP 31400 T**
4X4: Y10	12/86 → 12/95			●		VKDA 37200 T		**VKDP 31400 T**
YPSILON							
YPSILON	10/03 → 07/05			●		—		
ZETA							
ZETA	05/95 → 09/02			●		**VKDA 35317 T**	**VKD 35018 T**	**VKDP 33301 T**
MAZDA							
121							
1.1, 1.1 (DB#)	11/87 → 11/93			●		**VKDA 88401 T**		
1.25, 1.3	03/96 → 03/04	(EUR)		●				**VKDP 33401 T**
1.3, 1.3 16V	11/87 → 02/98			●		**VKDA 88401 T**		
1.8 D	03/96 → 03/04	(EUR)		●				**VKDP 33401 T**
1.25, 1.3	03/96 → 03/04			○				**VKDP 43400 T**
1.8 D	03/96 → 03/04			○				**VKDP 43400 T**
3							
3	10/03 → 01/05			●		—	**VKD 35035 T**	

MAZDA .../...

323

1.3	10/96 → 05/06					
		CH BA1*** - 500001 →, DOHC	●		VKDA____	**VKDP 81400 T**
1.5, 1.8	10/96 → 05/06					
		CH BA1*** - 500001 →, DOHC	●		VKDA____	**VKDP 81400 T**
1.5 16V, 1.6, 2.0	09/98 → 05/06		●		VKDA____	
1.6 D, 2.0 D	03/97 → 05/06					
		CH BA1*** - 500001 →, DOHC	●		VKDA____	**VKDP 81400 T**
2.0 D, 2.0 TD	09/98 → 05/06		●		VKDA____	
1.1, 1.3, 1.3 16V, 1.3 i, 1.4, 1.5, 1.5 i, 1.5 i Turbo, 1.6, 1.6 16V, 1.6 GT, 1.6 GT Turbo, 1.6 GT Turbo (BF1), 1.8 16V, 1.8 16V GT	11/80 → 10/94			○		**VKDP 93401 T**
1.7 D	04/86 → 07/94			○		**VKDP 93401 T**
4WD: 1.6 GT Turbo (BF2), 1.8, 1.8 16V, 1.8 16V Turbo	08/87 → 07/94			○		**VKDP 93401 T**

626

1.6	11/82 → 09/87		●			**VKDP 84402 T**
1.6	07/85 → 07/87	Man. GBX	●		**VKDA 88402 T**	
1.6	06/87 → 05/92		●			**VKDP 84401 T**
1.8, 2.0, 2.0 12V, 2.0 16V	06/87 → 05/92		●			**VKDP 84401 T**
1.8, 1.9, 2.0	05/97 → 05/06	4, 5, CH GF1***-100001 →.	●		**VKDA 88404 T**	
2.0	03/83 → 09/87		●			**VKDP 84402 T**
2.0	07/85 → 08/87	~~AAS~~, Man. GBX	●		**VKDA 88402 T**	
2.2 12V	11/87 → 04/92		●			**VKDP 84401 T**
2.0 D	01/83 → 06/87		●			**VKDP 84402 T**
2.0 D	07/85 → 06/87		●		**VKDA 88402 T**	
2.0 D	07/87 → 07/91		●			**VKDP 84401 T**
4 WD: 2.2 12V 4WD	11/87 → 07/90		●			**VKDP 84401 T**
1.6, 2.0	11/82 → 09/87			○		**VKDP 93402 T**
2.0 D	01/83 → 06/87			○		**VKDP 93402 T**

929 II

2.0, 2.0 i GLX	05/82 → 07/87	→| CH HB 540489		○		**VKDP 43400 T**

DEMIO

DEMIO	08/98 → 01/05	~~ABS~~	●			**VKDP 33107 T**
DEMIO	08/98 → 01/05	~~ABS~~		○		**VKDP 43105 T**

MPV II

2.0, 2.3, 2.5 V6	09/99 → 06/04		●		—	—
3.0 V6	04/02 → 08/04		●		—	—
2.0 DI	07/02 → 06/04		●		—	—

MERCEDES BENZ

124							
200, 200 E, 220 CE, 220 E, 230 CE, 230 E, 260 E, 280 E, 300 E, 300 CE, 300 CE-24, 300 E-24, 320 CE, 320 E, 400 E 4.2	12/84 → 06/93	~~SPS~~	●				**VKDP 33801 T**
200 D, 250 D, 250 Turbo-D	12/84 → 06/93	~~SPS~~	●				**VKDP 33801 T**
300 D, 300 Turbo-D	12/84 → 06/93	~~SPS~~	●				**VKDP 33801 T**
4-MATIC: 260 E, 300 E	09/86 → 06/93	~~SPS~~	●				**VKDP 33801 T**
4-MATIC: 300 D, 300 Turbo-D	09/86 → 06/93	~~SPS~~	●				**VKDP 33801 T**
190							
190	10/82 → 08/93		●		**VKDA 35810 T**		
E 1.8, 2.0, E 2.0, E 2.3	10/82 → 08/93	~~SPS~~	●				**VKDP 33801 T**
E 2.6	09/86 → 08/93	~~SPS~~	●				**VKDP 33801 T**
D 2.0, D 2.5, Turbo-D 2.5	08/83 → 08/93	~~SPS~~	●				**VKDP 33801 T**
A-class (W168)							
A-class (W168)	07/97 → 07/04		●		—	**VKD 35005 T**	
C-class (202)							
C-class (202)	03/93 → 05/00	IST	●		—		
C-class (202)							
C-class (202)	06/96 → 03/01	IST	●		—		
C-class (203)							
C 180 Kompressor (203.046), C 200 CGI Kompressor (203.043), C 200 Kompressor (203.042), C 230 Kompressor (203.040), C 180 (203.035), C 200 Kompressor (203.045), C 240 (203.061)	05/00 → 07/04	2WD	●		—		
C 32 AMG Kompressor (203.065), C 320 (203.064)	05/00 → 07/04	2WD	●		—		
C 180 Kompressor (203.046), C 200 CGI Kompressor (203.043), C 200 Kompressor (203.042), C 230 Kompressor (203.040), C 180 (203.035), C 200 Kompressor (203.045), C 240 (203.061)	05/00 → 07/04	~~SPS~~	●				**VKDP 33802 T**
C 32 AMG Kompressor (203.065), C 320 (203.064)	05/00 → 07/04	~~SPS~~	●				**VKDP 33802 T**
C 200 CDI, C 200 CDI (203.004, 007), C 220 CDI (203.006, 008), C 270 CDI (203.016), C 30 CDI AMG (203.018)	05/00 → 07/04	2WD	●		—		

MERCEDES BENZ .../...

C 200 CDI, C 200 CDI (203.004, 007), C 220 CDI (203.006, 008), C 270 CDI (203.016)	05/00 → 07/04	~~SPS~~	●				**VKDP 33802 T**
4-MATIC: C-class (203)	07/02 → 07/04	~~SPS~~	●				**VKDP 33802 T**
C-class (203) C 180 Kompressor (203.746), C 200 CGI Kompressor (203.743), C 200 Kompressor (203.742), C 230 Kompressor (203.740), C 180 (203.735), C 200 Kompressor (203.745), C 230 Kompressor (203.747)	03/01 → 07/04	2WD	●		—		
C 32 AMG Kompressor, C 320 (203.764)	03/01 → 07/04	2WD	●		—		
C 180 Kompressor (203.746), C 200 CGI Kompressor (203.743), C 200 Kompressor (203.742), C 230 Kompressor (203.740), C 180 (203.735), C 200 Kompressor (203.745), C 230 Kompressor (203.747)	03/01 → 07/04	~~SPS~~	●				**VKDP 33802 T**
C 32 AMG Kompressor, C 320 (203.764)	03/01 → 07/04	~~SPS~~	●				**VKDP 33802 T**
C 200 CDI (203.707), C 220 CDI (203.706, 708), C 30 CDI AMG (203.718)	03/01 → 07/04	2WD	●		—		
C 200 CDI (203.707), C 220 CDI (203.706, 708), C 30 CDI AMG (203.718)	03/01 → 07/04	~~SPS~~	●				**VKDP 33802 T**
C-class (203) C 180 Kompressor (203.246), C 200 CGI Kompressor (203.243), C 200 Kompressor (203.242), C 230 Kompressor (203.240), C 180 (203.235), C 200 Kompressor (203.245), C 240 (203.261)	03/01 → 07/04	2WD	●		—		
C 32 AMG Kompressor (203.265), C 320 (203.264)	03/01 → 07/04	2WD	●		—		

C 180 Kompressor (203.24 6), C 200 CGI Kompressor (203 .243), C 200 Kompressor (203.24 2), C 230 Kompressor (203.24 0), C 180 (203.235), C 200 Kompressor (203.24 5), C 240 (203.261)	03/01 → 07/04	~~SPS~~	●				**VKDP 33802 T**
C 32 AMG Kompressor (203 .265), C 320 (203.264)	03/01 → 07/04	~~SPS~~	●				**VKDP 33802 T**
C 200 CDI, C 200 CDI (203.204, 207), C 220 CDI (203.206, 208), C 270 CDI (203.216), C 30 CDI AMG (203.218)	03/01 → 07/04	2WD	●		—		
C 200 CDI, C 200 CDI (203.204, 207), C 220 CDI (203.206, 208), C 270 CDI (203.216), C 30 CDI AMG (203.218)	03/01 → 07/04	~~SPS~~	●				**VKDP 33802 T**
4-MATIC: C-class (203)	07/02 → 07/04	~~SPS~~	●				**VKDP 33802 T**
CLK (A208)							
CLK (A208)	03/98 → 03/02	IST	●		—		
CLK (C208)							
CLK (C208)	06/97 → 06/02	IST	●		—		
E-class (124)							
E 200, E 220, E 280, E 280 long, E 320, E 36 AMG, E 420, E 500	06/93 → 06/97	2WD	●		**VKDA 35811 T**		
E 200, E 220	06/93 → 06/95	~~SPS~~, ~~HD~~	●				**VKDP 33801 T**
E 280, E 280 long	06/93 → 06/95	~~SPS~~, ~~HD~~	●				**VKDP 33801 T**
E 320	06/93 → 06/95	~~SPS~~, ~~HD~~	●				**VKDP 33801 T**
E 200 D	06/93 → 06/95	2WD	●		**VKDA 35811 T**		
E 200 D	06/93 → 06/95	~~SPS~~, ~~HD~~	●				**VKDP 33801 T**
E 250 D, E 250 Turbo-D, E 300 D, E 300 Turbo-D	06/93 → 06/95	2WD	●		**VKDA 35811 T**		
E 250 D, E 250 Turbo-D, E 300 D, E 300 Turbo-D	06/93 → 06/95	~~SPS~~, ~~HD~~	●				**VKDP 33801 T**
E-class (124)							
E-class (124)	06/93 → 06/96	2WD	●		**VKDA 35811 T**		
E 200 T, E 220 T, E 280 T	06/93 → 06/96	~~SPS~~, ~~HD~~	●				**VKDP 33801 T**
E 320 T	06/93 → 06/96	~~SPS~~, ~~HD~~	●				**VKDP 33801 T**
E 250 T D, E 250 Turbo D, E 300 T D, E 300 T Turbo-D	06/93 → 06/96	~~SPS~~, ~~HD~~	●				**VKDP 33801 T**
4-MATIC: E 300 T	06/93 → 06/96	~~SPS~~	●				**VKDP 33801 T**
4-MATIC: E 300 T Turbo-D	06/93 → 06/96	~~SPS~~	●				**VKDP 33801 T**
E-class (210)							
E-class (210)	06/95 → 03/02	IST	●		—		
4-MATIC: E-class (210)	12/96 → 03/02	IST	●		—		
E-class (210)							
E-class (210)	06/96 → 03/03	IST	●		—		

MERCEDES BENZ .../...

4-MATIC: E-class (210)	12/96 → 03/03	IST	● —
E-class (211)			
E 200 CGI, E 200 Kompressor (211.042), E200 NGT, E 240 (211.061), E 280, E 320 (211.065), E 350, E 500 (211.070), E 55 AMG Kompressor (211.076)	03/02 → 05/06		● —
E 220 CDI (211.006), E 200 CDI (211.004), E 270 CDI (211.016), E 280 CDI, E 320 CDI, E 280 CDI (211.023), E 320 CDI (211.026), E 400 CDI (211.028)	03/02 → 05/06		● —
4-MATIC: E-class (211)	03/03 → 07/04	IST	● —
E-class (211) T-Model			
E 200 T Kompressor (211.242), E 240 T (211.261), E 280 T, E 320 T (211.265), E 350 T, E 500 T (211.270), E 55 T AMG Kompressor (211.276)	03/03 → 05/06		● —
E 220 T CDI (211.206), E 270 T CDI (211.216), E 280 T CDI, E 320 T CDI, E 280 T CDI (211.223), E 320 T CDI (211.226)	03/03 → 05/06		● —
4-MATIC: E-class (211) T-Model	07/03 → 07/04	IST	● —
G-class			
230 GE, 300 GE, 320 GE, G 320, G 36 AMG, G 500 E, G 500, G 55 AMG	09/89 → 07/04		● —
250 GD, G 270 CDI, 300 GD, G 300 TD, 350 G Turbo D, 350 G Turbo-D, G 400 CDI..	09/89 → 07/04		● —
M-class (W163)			
M-class (W163)	02/98 → 07/04	IST	● —
S-class (140)			
S-class (140)	02/91 → 02/99	IST	● —
S-class (215)			
S-class (215)	03/99 → 07/04	HST	● —

S-class (220)

S 280, S 320, S 350, S 430, S 500, S 55 AMG, S 55 AMG Kompressor, S 600, S 65 AMG, S 63 AMG	10/98 → 07/04		●		—
S 320 CDI, S 400 CDI	08/99 → 07/04		●		—
4-MATIC: S-class (220)	09/02 → 07/04	HST	●		—

SLK

200 (170.435), 200 Kompressor (170.444, 445), 230 Kompressor (170.447, 449), 32 AMG Kompressor (170.466), 320 (170.465)	09/96 → 04/04		●		—

MERCEDES BENZ

V-class

V-class	09/96 → 07/04		●		**VKDA 35813 T**

VITO

113 2.0 (638.014, 114), 114 2.3 (638.034, 134)	02/96 → 07/04		●		**VKDA 35813 T**
108 CDI 2.2, 110 CDI 2.2, 112 CDI 2.2, 108 D 2.3 (638.064, 164), 110 D 2.3 (638.074), 110 TD 2.3 (638.174)	02/96 → 07/04		●		**VKDA 35813 T**

MG

MG ZR

MG ZR	06/01 → 06/05		●		***VKDC 35703 T***
MG ZR	06/01 → 06/05			○	***VKDA 40700 T***

MG ZS

MG ZS	07/01 → 06/05		●		***VKDA 35705 T***

MG ZT

1.8 16V, 1.8 T 16V, 160, 180, 190, 260	06/01 → 06/05		●		***VKDC 35709 T***
160, 190	06/01 → 01/05		●		VKDP____
2.0 CDTi	11/02 → 06/05		●		***VKDC 35709 T***
160, 190	06/01 → 01/05			○	VKDP____
MG ZT	06/01 → 06/05			○	***VKDA 40700 T***

MG ZT- T

1.8 16V, 1.8 T 16V, 160, 180, 190, 260	10/01 → 06/05		●		***VKDC 35709 T***
160, 190	10/01 → 01/05		●		VKDP____
2.0 CDTi	11/02 → 06/05		●		***VKDC 35709 T***
160, 190	10/01 → 01/05			○	VKDP____
MG ZT- T	10/01 → 06/05			○	***VKDA 40700 T***

MINI

MINI

Cooper, Cooper S, One	03/02 → 07/04	●		VKDC 35821 T	
Cooper, Cooper S, One	06/01 → 11/04 SPS	●			*VKDP 33803 T*
One D	06/03 → 07/04	●		VKDC 35821 T	
One D	06/03 → 11/04 SPS	●			*VKDP 33803 T*
MINI	06/01 → 10/05		○	*VKDA 40815 T*	
Cooper, Cooper S, One	06/01 → 11/04 SPS		○		*VKDP 43800 T*
One D	06/03 → 11/04 SPS		○		*VKDP 43800 T*

MINI

MINI	07/04 → 07/04	●		VKDC 35821 T	
MINI	07/04 → 11/04 SPS	●			*VKDP 33803 T*
MINI	07/04 → 10/05		○	*VKDA 40815 T*	
MINI	07/04 → 11/04 SPS		○		*VKDP 43800 T*

MITSUBISHI

COLT

1.2 EL, GL (C15A)	02/84 → 05/86	●		VKDA 81501 T	VKDP 81505 T
1.2 EL, GL (C15A), 1.3 EL, GL (C11A), 1.5 GLX (C12A), 1.6 Turbo ECi (C13A)	09/85 → 04/88 (8)	●			VKDP 83502 T
1.2 EL, GL (C15A), 1.3 (C11A), 1.3 EL, GL (C11A)	06/86 → 12/89	●		VKDA 81502 T	
1.3 (C51A), 1.3 12V (C51A)	04/88 → 05/92	●		VKDC 81503 T	VKDP 83503 T
1.3 GLi 12V (CA1A)	04/92 → 06/93	●		VKDC 81504 T	
1.5 GLX (C12A)	09/84 → 05/86	●		VKDA 81501 T	
1.5 GLX (C12A)	09/84 → 04/88	●			VKDP 81505 T
1.5 GLX (C12A)	06/86 → 04/88	●		VKDA 81502 T	
1.5 (C52A) CAT, 1.5 GLXi (C52A)	04/88 → 05/92	●		VKDC 81503 T	VKDP 83503 T
1.6 Turbo ECi (C13A)	02/84 → 05/86	●		VKDA 81501 T	VKDP 81505 T
1.6 Turbo ECi (C13A)	06/86 → 04/88	●		VKDA 81502 T	
1.6 GTi 16V (C53A)	04/88 → 05/90	●		VKDC 81503 T	VKDP 83503 T
1.6 (CC4, CD4), 1.6 GLXi 16V (CA4A)	12/91 → 06/93	●		VKDC 81504 T	
1.8 (C58A), 1.8 GTi 16V (C58A) CAT	04/88 → 05/92	●		VKDC 81503 T	VKDP 83503 T
1.8 GTi 16V (CA5A), 2.0 (CB8)	12/91 → 06/93	●		VKDC 81504 T	
1.8 D (C14), 1.8 GL Diesel (C14A)	01/84 → 05/86	●		VKDA 81501 T	VKDP 81505 T
1.8 GL Diesel (C14A)	09/86 → 04/88	●		VKDA 81502 T	
1.8 GL Diesel (C14A)	09/86 → 04/88 (8)	●			VKDP 83502 T
1.8 Diesel GLX (C54A)	04/88 → 05/92	●		VKDC 81503 T	VKDP 83503 T

CORDIA

CORDIA	10/82 → 12/86	●			VKDP 81505 T

LANCER

1.2 (C15A)	01/84 → 05/86	●		VKDA 81501 T	VKDP 83503 T
1.2 (C15A)	06/86 → 12/89	●		VKDA 81502 T	VKDP 83503 T
1.2 (C65A)	08/86 → 04/88 (8)	●			VKDP 83502 T
1.2 (C65A), 1.3 (C61A), 1.3 12V (C61A)	04/88 → 05/94	●		VKDC 81503 T	
1.3 (CA1, CB1)	12/91 → 06/93	●		VKDC 81504 T	VKDP 83503 T
1.5 (C12A)	01/84 → 05/86	●		VKDA 81501 T	VKDP 83503 T
1.5 (C12A)	06/86 → 12/89	●		VKDA 81502 T	VKDP 83503 T

1.5 GLX (C12AS)	06/86 → 04/88	~~S~~	●					**VKDP 83502 T**
1.5 (C62A), 1.5 12V (C62A), 1.6 (C63A, C66A, C76A), 1.6 GLi 16V (C66A)	04/88 → 05/93		●		**VKDC 81503 T**			
1.6 (CA4, CA5, CB4, CC4, CD4)	12/91 → 06/93		●		**VKDC 81504 T**			**VKDP 83503 T**
1.8 (C69A), 1.8 GTi 16V (C68A, C69A)	04/88 → 12/93		●		**VKDC 81503 T**			
1.8 (CB5)	12/91 → 06/93		●		**VKDC 81504 T**			**VKDP 83503 T**
2.0 (C67A)	04/88 → 05/93		●		**VKDC 81503 T**			**VKDP 83503 T**
1.8 D (C14A)	01/84 → 05/86		●		**VKDA 81501 T**			**VKDP 83503 T**
1.8 D (C14A)	06/86 → 12/89		●		**VKDA 81502 T**			**VKDP 83503 T**
1.8 Diesel (C14AS)	09/86 → 04/88	~~S~~	●					**VKDP 83502 T**
1.8 Diesel (C64A), 1.8 GLX Diesel (C64A)	04/88 → 05/92		●		**VKDC 81503 T**			
2.0 D (CB8)	12/91 → 06/93		●		**VKDC 81504 T**			**VKDP 83503 T**
4X4: 1.8 GLXi (C77A)	09/89 → 06/92		●		**VKDC 81503 T**			
MIRAGE								
1.5 (C52A, C62A)	04/88 → 12/91		●		**VKDC 81503 T**			
1.5 (CA2A, CB2A)	06/92 → 08/94		●		**VKDC 81504 T**			
1.6 (C53A, C63A)	04/88 → 12/91		●		**VKDC 81503 T**			
1.8 (CA5A, CB5A)	06/92 → 08/94		●		**VKDC 81504 T**			
SANTAMO								
2.0 16V	02/95 → 12/99		●		**VKDC 81505 T**			
4X4: 2.0 16V	02/95 → 12/99		●		**VKDC 81505 T**			
SPACE WAGON								
1.8 (N31W), 2.0 GLXi (N33W)	10/91 → 07/94		●		**VKDC 81505 T**			
TREDIA								
TREDIA	09/82 → 10/87	2WD	●					**VKDP 81505 T**
NISSAN								
ALMERA								
1.5	03/01 → 08/02	Mod. N16E	●		VKDA____			
1.6	09/95 → 02/98		●		**VKDA 88203 T**			
1.8	03/01 → 02/04	Mod. N16E	●		VKDA____			
BLUEBIRD								
1.6	03/86 → 02/90		●		**VKDC 81201 T**			
1.8 Turbo	12/85 → 01/88		●		—			
2.0 i (HLT72, T12)	12/85 → 02/90		●		**VKDC 81201 T**			
2.0 (T12), 2.0 i, 2.0 i (FHLT72, T12)	12/85 → 02/90	~~Mod.~~ SLX	●		**VKDC 81201 T**			
2.0 (T12), 2.0 i (FHLT72, T12)	12/85 → 02/90	AAS	●		—			
2.0 D (T12)	12/85 → 02/90		●		**VKDC 81201 T**			
2.0 D (FSLT72, T12)	03/86 → 02/90	AAS	●		—			
CHERRY								
1.0, 1.3, 1.5	05/82 → 10/86		●					**VKDP 83201 T**
1.7 D	10/82 → 12/86		●					**VKDP 83201 T**

NISSAN .../...

MAXIMA					
3.0 (U11)	07/84 → 08/88	●		**VKDC 81201 T**	
MICRA					
1.0	12/82 → 12/89	●		**VKDA 88205 T**	
1.0 i 16V	08/92 → 01/96	●		VKDA____	
1.0 16V	01/03 → 03/06	●		***VKDA 35631 T***	
1.2	07/86 → 07/92	●		**VKDA 88205 T**	
1.2 16V	01/03 → 03/06	●		***VKDA 35631 T***	
1.3 i 16V	08/92 → 01/96	●		VKDA____	
1.4 16V, 160 SR	01/03 → 03/06	●		***VKDA 35631 T***	
1.5 dCi	01/03 → 03/06	●		***VKDA 35631 T***	
MICRA	12/82 → 07/92		○		**VKDP 93201 T**
MICRA C+C					
MICRA C+C	08/05 → 03/06	●		***VKDA 35631 T***	
PRIMERA					
1.6 i, 2.0 i	07/90 → 07/94	●		—	
1.6, 1.6 16V, 1.8 16V, 2.0, 2.0 16V, 2.0 GT, 2.0 i	06/90 → 03/04	●			VKDP____
2.0 D	07/90 → 07/94	●		—	
2.0 D, 2.0 TD	01/91 → 03/04	●			VKDP____
4X4: PRIMERA	04/91 → 06/96	●			VKDP____
1.6, 2.0, 2.0 16V, 2.0 GT, 2.0 i	06/90 → 06/96		○		**VKDP 93203 T**
2.0 D	01/91 → 01/96		○		**VKDP 93203 T**
4X4: PRIMERA	04/91 → 06/96		○		**VKDP 93203 T**
PULSAR					
1.0 (N13), 1.3 (N13), 1.4 (N13), 1.5 (N13), 1.6 (N13), 1.8 (N13)	06/86 → 08/90	●		**VKDA 88202 T**	
1.7 D (N13)	06/86 → 08/90	●		**VKDA 88202 T**	
STANZA					
1.6 (T12)	12/85 → 02/90	●		**VKDC 81201 T**	
2.0 (T12)	12/85 → 02/90 ~~Mod.~~ SLX	●		**VKDC 81201 T**	
2.0 D (T12)	12/85 → 02/90	●		**VKDC 81201 T**	
SUNNY					
1.0 (N13)	06/86 → 08/90	●		**VKDA 88202 T**	**VKDP 83201 T**
1.3 (N13)	06/86 → 08/88	●		**VKDA 88202 T**	
1.4 LX (N13)	10/88 → 08/90	●		**VKDA 88202 T**	
1.4 i, 1.4 i 16V (N14)	10/90 → 06/95	●		**VKDA 88203 T**	
1.5 (N13)	06/86 → 10/88	●		**VKDA 88202 T**	
1.6 i (B12)	06/86 → 09/88	●		**VKDA 88202 T**	
1.6 i (N13)	06/86 → 10/88	●		**VKDA 88202 T**	
1.6, 1.6 (N13)	06/86 → 08/90	●		**VKDA 88202 T**	
1.6 (B12)	06/86 → 05/90 ~~AAS~~	●		**VKDA 88202 T**	**VKDP 83201 T**
1.6 GTI 16V, 1.6 i 12V (N13)	05/87 → 08/90	●		**VKDA 88202 T**	
1.6 GTI 16V (B12)	05/87 → 09/88 ~~AAS~~	●		**VKDA 88202 T**	
1.6 16V (N14), 1.6 i (N14), 1.6i 16V (N14)	10/90 → 05/95	●		**VKDA 88203 T**	
1.8 (N13), 1.8 GTI 16V (B12)	10/88 → 08/90	●		**VKDA 88202 T**	

2.0 GTI 16V (N14) ... 10/90 → 12/94 ...	●		**VKDA 88204 T**		
2.0 i 16V (N14) ... 10/90 → 05/95 ...	●		**VKDA 88204 T**		
1.7 D (B11) ... 08/82 → 10/86 ...	●		—		**VKDP 83201 T**
1.7 D (B12, N13) ... 06/86 → 05/89 ...	●		**VKDA 88202 T**		
2.0 D (N14) ... 10/90 → 12/94 ...	●		**VKDA 88203 T**		
4X4: 1.6 i 16V (N14) ... 10/92 → 05/95 ...	●		**VKDA 88203 T**		
4X4: 2.0 GTI-R (N14) ... 10/90 → 12/94 ...	●		**VKDA 88204 T**		

OPEL

AGILA

1.0, 1.0 12V, 1.2 16V ... 09/00 → 09/04 ...	●		VKDA____		
1.0, 1.0 12V, 1.2 16V ... 09/00 → 12/05 ... →| CH YG 999 999	●				**VKDP 33509 T**
1.0, 1.0 12V, 1.2 16V ... 09/00 → 12/05 ... CH 1G 000 001 |→	●				—
1.3 CDTI ... 08/03 → 09/04 ...	●		VKDA____		
1.3 CDTI ... 08/03 → 12/05 ... →| CH YG 999 999	●				**VKDP 33509 T**
1.3 CDTI ... 08/03 → 12/05 ... CH 1G 000 001 |→	●				—

ASCONA C

ASCONA C ... 09/81 → 08/88 ...	●		VKDA 35513 T	**VKD 35005 T**	**VKDP 33500 T**

ASCONA C

ASCONA C ... 09/81 → 08/88 ...	●		VKDA 35513 T	**VKD 35005 T**	**VKDP 33500 T**

ASTRA F

1.4, 1.4 i, 1.4 i 16V, 1.4 Si, 1.6, 1.6 i, 1.6 i 16V, 1.6 Si, 1.8 i, 1.8 i 16V, 2.0 i, 2.0 i 16V ... 09/91 → 09/98 ... →| CH T2677310	●		**VKDA 35503 T**		
1.4, 1.4 i, 1.4 i 16V, 1.4 Si, 1.6, 1.6 i, 1.6 i 16V, 1.6 Si, 1.8 i, 1.8 i 16V, 2.0 i, 2.0 i 16V ... 09/91 → 09/98 ... CH T2677311 |→	●		**VKDA 35515 T**		
1.4, 1.4 i, 1.4 i 16V, 1.4 Si, 1.6, 1.6 i, 1.6 i 16V, 1.6 Si, 1.8 i, 1.8 i 16V ... 09/91 → 09/98 ...	●				**VKDP 33501 T**
2.0 i ... 03/92 → 09/98 ...	●				**VKDP 33501 T**
2.0 i 16V ... 02/95 → 09/98 ...	●				**VKDP 33500 T**
1.7 D, 1.7 TD, 1.7 TDS ... 03/92 → 09/98 ... →| CH T2677310	●		**VKDA 35503 T**		**VKDP 33501 T**
1.7 D, 1.7 TD, 1.7 TDS ... 03/92 → 09/98 ... CH T2677311 |→	●		**VKDA 35515 T**		**VKDP 33501 T**

ASTRA F

1.4 i, 1.6 i ... 10/91 → 01/99 ... →| CH T2677310	●		**VKDA 35503 T**		**VKDP 33501 T**
1.4 i, 1.6 i ... 10/91 → 01/99 ... CH T2677311 |→	●		**VKDA 35515 T**		**VKDP 33501 T**
1.7 D, 1.7 TD ... 12/91 → 01/99 ... →| CH T2677310	●		**VKDA 35503 T**		**VKDP 33501 T**
1.7 D, 1.7 TD ... 12/91 → 01/99 ... CH T2677311 |→	●		**VKDA 35515 T**		**VKDP 33501 T**

ASTRA F

ASTRA F ... 03/93 → 03/01 ... →| CH T2677310	●		**VKDA 35503 T**		**VKDP 33501 T**
ASTRA F ... 03/93 → 03/01 ... CH T2677311 |→	●		**VKDA 35515 T**		**VKDP 33501 T**

ASTRA F

1.4, 1.4 i, 1.4 i 16V, 1.4 Si, 1.6, 1.6 i, 1.6 i 16V, 1.6 Si, 1.8 i, 1.8 i 16V, 2.0 i, 2.0 i 16V ... 09/91 → 01/98 ... →| CH T2677310	●		**VKDA 35503 T**		

OPEL .../...									
1.4, 1.4 i, 1.4 i 16V, 1.4 Si, 1.6, 1.6 i, 1.6 i 16V, 1.6 Si, 1.8 i, 1.8 i 16V, 2.0 i, 2.0 i 16V	09/91 → 01/98	CH T2677311	→		●		**VKDA 35515 T**		
1.4, 1.4 i, 1.4 i 16V, 1.4 Si, 1.6, 1.6 i, 1.6 i 16V, 1.6 Si, 1.8 i, 1.8 i 16V	09/91 → 01/98				●				**VKDP 33501 T**
2.0 i	09/91 → 07/94				●				**VKDP 33501 T**
2.0 i 16V	03/93 → 01/98				●				**VKDP 33500 T**
1.7 D, 1.7 TD, 1.7 TDS	12/91 → 01/98	→| CH T2677310			●		**VKDA 35503 T**		**VKDP 33501 T**
1.7 D, 1.7 TD, 1.7 TDS	12/91 → 01/98	CH T2677311	→		●		**VKDA 35515 T**		**VKDP 33501 T**
ASTRA F									
1.4, 1.4 i, 1.4 i 16V, 1.4 Si, 1.6, 1.6 i, 1.6 i 16V, 1.6 Si, 1.8 i, 1.8 i 16V, 2.0 GSI 16V, 2.0 i, 2.0 i 16V	09/91 → 01/98	→| CH T2677310			●		**VKDA 35503 T**		
1.4, 1.4 i, 1.4 i 16V, 1.4 Si, 1.6, 1.6 i, 1.6 i 16V, 1.6 Si, 1.8 i, 1.8 i 16V, 2.0 GSI 16V, 2.0 i, 2.0 i 16V	09/91 → 01/98	CH T2677311	→		●		**VKDA 35515 T**		
1.4, 1.4 i, 1.4 i 16V, 1.4 Si, 1.6, 1.6 i, 1.6 i 16V, 1.6 Si, 1.8 i, 1.8 i 16V	09/91 → 01/98				●				**VKDP 33501 T**
2.0 GSI 16V, 2.0 i 16V	09/91 → 01/98				●				**VKDP 33500 T**
2.0 i	09/91 → 01/98				●				**VKDP 33501 T**
1.7 D, 1.7 TD, 1.7 TDS	12/91 → 01/98	→| CH T2677310			●		**VKDA 35503 T**		**VKDP 33501 T**
1.7 D, 1.7 TD, 1.7 TDS	12/91 → 01/98	CH T2677311	→		●		**VKDA 35515 T**		**VKDP 33501 T**
ASTRA F CLASSIC									
ASTRA F CLASSIC	01/98 → 12/05				●				**VKDP 34500 T**
ASTRA F CLASSIC									
ASTRA F CLASSIC	01/98 → 12/05				●				**VKDP 34500 T**
ASTRA G									
ASTRA G	02/98 → 09/04				●		**VKDA 35508 T**		**VKDP 34500 T**
ASTRA G									
ASTRA G	01/99 → 09/04				●		**VKDA 35508 T**		**VKDP 34500 T**
ASTRA G									
ASTRA G	03/01 → 09/04				●		**VKDA 35508 T**		
ASTRA G									
ASTRA G	03/00 → 09/04				●		**VKDA 35508 T**		**VKDP 34500 T**
ASTRA G									
ASTRA G	02/98 → 09/04				●		**VKDA 35508 T**		**VKDP 34500 T**

ASTRA G							
ASTRA G	09/98 → 09/04	●		**VKDA 35508 T**		**VKDP 34500 T**
ASTRA H							
ASTRA H	03/04 → 01/06	●		—			
ASTRA H							
ASTRA H	08/04 → 01/06	●		—			
ASTRA H GTC							
ASTRA H GTC	03/05 → 01/06	●		—			
CALIBRA							
2.0 i, 2.0 i 16V	06/90 → 07/97	●		**VKDA 35501 T**			
2.0 i	06/90 → 07/97	●				**VKDP 33500 T**	
4X4: CALIBRA	06/90 → 07/97	●		**VKDA 35501 T**			
4X4: 2.0 i	06/90 → 07/97	●				**VKDP 33500 T**	
COMBO							
COMBO	10/01 → 05/06	●		**VKDA 35509 T**			
COMBO Tour							
COMBO Tour	10/01 → 01/05	●		**VKDA 35509 T**			
COMMODORE C							
COMMODORE C	08/78 → 12/82	●				**VKDP 33501 T**	
CORSA A							
CORSA A	09/82 → 03/93	●				**VKDP 33500 T**	
CORSA A							
CORSA A	02/86 → 07/90	●				**VKDP 33500 T**	
CORSA B							
CORSA B	03/93 → 09/00	●		**VKDA 35500 T**		**VKDP 33500 T**	
CORSA B							
CORSA B	08/99 → 09/00	●		**VKDA 35500 T**		**VKDP 33500 T**	
CORSA C							
1.0, 1.2, 1.4, 1.4 Twinport, 1.8	09/00 → 01/05	●		**VKDA 35508 T**			
1.0, 1.2, 1.4, 1.8	09/00 → 12/05	●				—	
1.3 CDTI, 1.7 CDTI, 1.7 DI, 1.7 DTI	09/00 → 01/05	●		**VKDA 35508 T**		—	
CORSA C							
CORSA C	09/00 → 05/06	●		**VKDA 35508 T**		—	

OPEL .../...					
KADETT D					
1.2, 1.2 S, 1.3 N, 1.3 S,					
1.6 S, 1.8 GT/E	08/79 → 08/84	●			**VKDP 33500 T**
1.6 D	03/82 → 08/84	●			**VKDP 33500 T**
KADETT E					
1.2, 1.3 i CAT, 1.3 N, 1.3 S,					
1.4 i, 1.4 S, 1.6 i, 1.6 i CAT,					
1.6 S	12 SC, 13 N, 13 NB, 13 S, 14 NV, 16 SV, C 13 N, C 14 NZ, C 16 LZ, C 16 NZ, E 16 NZ, 09/84 → 08/91	●		**VKDC 35504 T**	**VKDP 33500 T**
1.6 S, 1.8, 1.8 i, 1.8 S, 2.0 i,					
2.0 i CAT	16S, 18 E, 20 NE, C 18 NE, C 18 NT, C 18 NZ, C 20 NE, E 18 NV, 09/84 → 08/91	●		**VKDC 35505 T**	**VKDP 33500 T**
1.5 TD, 1.6 D, 1.7 D	15TD, 16 D, 16 DA, 17 D, 09/84 → 08/91	●		**VKDC 35505 T**	**VKDP 33500 T**
KADETT E (E35)					
KADETT E (E35)	09/84 → 08/91	●		**VKDC 35505 T**	**VKDP 33500 T**
KADETT E					
1.2, 1.3 N, 1.3 S, 1.4 i,					
1.4 S, 1.6, 1.6 i	12 SC, 13 N, 13 NB, 13 S, 14 NV, 16 SV, C 14 NZ, C 16 NZ, 09/84 → 12/91	●		**VKDC 35504 T**	**VKDP 33500 T**
1.6 i	C 16 NZ, 08/91 → 07/94	●		**VKDC 35504 T**	**VKDP 33500 T**
1.8 i	C 18 NT, 08/84 → 12/91	●		**VKDC 35505 T**	**VKDP 33500 T**
1.6 D, 1.7 D	16 D, 16 DA, 17 D, 08/84 → 12/91	●		**VKDC 35505 T**	**VKDP 33500 T**
1.7 D	17 DR, 07/92 → 07/94	●		**VKDC 35505 T**	**VKDP 33500 T**
KADETT E					
1.3 S, 1.4 i, 1.4 S, 1.6 i,					
1.6 i CAT	13 S, 14 NV, 16 SV, C 14 NZ, C 16 LZ, C 16 NZ, E 16 NZ, 10/86 → 02/93	●		**VKDC 35504 T**	**VKDP 33500 T**
2.0 i, 2.0 i CAT	20 NE, C 20 NE, 10/86 → 02/93	●		**VKDC 35505 T**	**VKDP 33500 T**
KADETT E					
1.2, 1.3 i CAT, 1.3 N, 1.3 S,					
1.4 i, 1.4 S, 1.6 i, 1.6 i CAT,					
1.6 S	12 SC, 13 N, 13 NB, 13 S, 14 NV, 16 SV, C 13 N, C 14 NZ, C 14 SE, C 16 LZ, C 16 NZ, E 16 NZ, 09/84 → 08/91	●		**VKDC 35504 T**	**VKDP 33500 T**
1.6 S, 1.8 E, 1.8 GSI, 1.8 i,					
1.8 S, 2.0 GSI, 2.0 GSI 16V,					
2.0 GSI 16V CAT,					
2.0 GSI CAT	16S, 18 E, 20 NE, 20 SEH, 20 XE, 20 XEJ, C 18 NE, C 18 NT, C 18 NZ, C 20 NE, C 20 XE, E 18 NV, S 18 NV, 09/84 → 08/91	●		**VKDC 35505 T**	**VKDP 33500 T**

1.5 TD, 1.6 D, 1.7 D	15TD, 16 D, 16 DA, 17 D	09/84 → 08/91		●	VKDC 35505 T		VKDP 33500 T
MERIVA							
1.4 16V Twinport, 1.6, 1.6 16V, 1.8		05/03 → 01/05		●	VKDA 35509 T		
1.6, 1.6 16V, 1.8		05/03 → 06/05		●			—
1.7 CDTI, 1.7 DTI		09/03 → 01/05		●	VKDA 35509 T		—
MOVANO							
MOVANO		07/98 → 01/05	IST	●	—		
OMEGA A							
1.8, 1.8 N, 1.8 S, 2.0, 2.0 i, 2.4 i, 2.6 i	18 NV, 18 SEH, 18 SV, 20 SE, C 20 NE, C 20 NEF, C 20 NEJ, C 24 NE, C 26 NE, E 18 NVR	09/86 → 03/94		●	VKDA 35510 T	VKD 35005 T	
3.0	30 NE, C 30 LE, C 30 NE	03/87 → 03/94		●	VKDA 35511 T	VKD 35005 T	
OMEGA A		09/86 → 03/94	~~AAS~~	●			VKDP 33504 T
2.3 D, 2.3 TD, 2.3 TD Interc.	23 DTR, 23 YD, 23 YDT	10/86 → 03/94		●	VKDA 35510 T	VKD 35005 T	
OMEGA A							
1.8, 1.8 N, 1.8 S, 2.0, 2.0 i, 2.4 i, 2.6 i	18 NV, 18 SEH, 18 SV, 20 SE, C 20 NE, C 20 NEF, C 20 NEJ, C 24 NE, C 26 NE, E 18 NVR	09/86 → 03/94		●	VKDA 35510 T	VKD 35005 T	
3.0, 3.0 CAT	30 NE, C 30 LE, C 30 NE	03/87 → 03/94		●	VKDA 35511 T	VKD 35005 T	
OMEGA A		09/86 → 03/94	~~AAS~~	●			VKDP 33504 T
2.3 D, 2.3 TD, 2.3 TD Interc.	23 DTR, 23 YD, 23 YDT	09/86 → 03/94		●	VKDA 35510 T	VKD 35005 T	
OMEGA B							
2.0	20 SE, X 20 SE	03/94 → 12/00	~~HD~~	●	VKDA 35510 T	VKD 35005 T	
2.2 16V	Z22XE	09/99 → 07/03		●	VKDA 35511 T	VKD 35005 T	
2.2 16V	Y22XE	09/99 → 07/03	, L.H.D, ~~HD~~	●	VKDA 35510 T	VKD 35005 T	
2.5 V6	X 25 XE	03/94 → 09/00	~~HD~~	●	VKDA 35511 T	VKD 35005 T	
2.6 V6	Y 26 SE	09/00 → 07/03		●	VKDA 35511 T	VKD 35005 T	
3.0 V6	X 30 XE	04/94 → 02/01	~~HD~~	●	VKDA 35511 T	VKD 35005 T	
3.2 V6	Y 32 SE	02/01 → 07/03		●	VKDA 35511 T	VKD 35005 T	
2.0 16V	X 20 XEV	03/94 → 09/99	CH Y1000001 →|, ~~HD~~	●	VKDA 35511 T	VKD 35005 T	
2.0 16V	X 20 XEV	03/94 → 09/99	→| CH X1999999, R.H.D, ~~HD~~	●	VKDA 35510 T	VKD 35005 T	
OMEGA B		03/94 → 07/03	~~AAS~~	●			VKDP 33504 T
2.0 DTI 16V, 2.2 DTI 16V, 2.5 DTI	X 20 DTH, Y 22 DTH, Y25TD	09/97 → 07/03		●	VKDA 35511 T	VKD 35005 T	
2.5 TD	U25TD, X25TD	04/94 → 07/03	~~HD~~	●	VKDA 35511 T	VKD 35005 T	
OMEGA B							
2.0	X 20 SE	03/94 → 09/99	~~HD~~	●	VKDA 35510 T	VKD 35005 T	
2.2 16V	Z22XE	09/99 → 07/03		●	VKDA 35511 T	VKD 35005 T	
2.2 16V	Y22XE	09/99 → 07/03	, L.H.D, ~~HD~~	●	VKDA 35510 T	VKD 35005 T	
2.5 V6	X 25 XE	03/94 → 09/00	~~HD~~	●	VKDA 35511 T	VKD 35005 T	

OPEL .../...

2.6 V6	Y 26 SE	09/00 → 07/03		●	VKDA 35511 T	VKD 35005 T	
3.0 V6	X 30 XE	04/94 → 02/01	~~HD~~	●	VKDA 35511 T	VKD 35005 T	
3.2 V6	Y 32 SE	02/01 → 07/03		●	VKDA 35511 T	VKD 35005 T	
2.0 16V	X 20 XEV	03/94 → 09/99	CH Y1000001 →|, ~~HD~~	●	VKDA 35511 T	VKD 35005 T	
2.0 16V	X 20 XEV	03/94 → 09/99	→| CH X1999999, R.H.D, ~~HD~~	●	VKDA 35510 T	VKD 35005 T	
OMEGA B		03/94 → 07/03	~~AAS~~	●			VKDP 33504 T
2.0 DTI 16V, 2.2 DTI 16V, 2.5 DTI	X 20 DTH, Y 22 DTH, Y25TD	09/97 → 07/03		●	VKDA 35511 T	VKD 35005 T	
2.5 TD	25 DT, X 25 DT, X 25 TD	04/94 → 02/01	~~HD~~	●	VKDA 35511 T	VKD 35005 T	

REKORD E

REKORD E		08/77 → 08/86		●			VKDP 33501 T

SENATOR A

SENATOR A		02/78 → 08/87		●			VKDP 33501 T

SENATOR B

2.5 i, 2.6 i, 3.0, 3.0 i CAT	25 NE, 30 NE, C 26 NE, C 30 LE, C 30 NE	09/87 → 09/93		●	VKDA 35510 T	VKD 35005 T	
3.0 24V	C 30 SE	09/89 → 09/93		●	VKDA 35511 T	VKD 35005 T	

SPEEDSTER

SPEEDSTER		09/00 → 01/05	IST	●	—		

TIGRA

TIGRA		07/94 → 12/00		●	VKDA 35500 T		VKDP 33500 T

TIGRA TwinTop

1.4, 1.8		06/04 → 01/05		●	VKDA 35508 T		

VECTRA A

VECTRA A		04/88 → 11/95		●	VKDA 35501 T		VKDP 33500 T
4X4: VECTRA A		01/89 → 11/95		●	VKDA 35501 T		VKDP 33500 T

VECTRA B

1.6 i, 1.6 i 16V, 1.8 i 16V, 2.0 i	16 LZ2, 20 NEJ, X 16 SZR, X 16 XEL, X 18 XE, X 18 XE1, Y 16 XE, Z 16 XE, Z 18 XE	10/95 → 03/03		●	VKDA 35508 T		
1.6 i, 1.6 i 16V, 1.8 i 16V, 2.0 i, 2.0 i 16V, 2.2 i 16V	16 LZ2, 20 NEJ, C 20 SEL, X 16 SZR, X 16 XEL, X 18 XE, X 18 XE1, X 20 XEV, Y 16 XE, Z 16 XE, Z 18 XE, Z 22 SE	10/95 → 06/05	~~HD~~	●			VKDP 34500 T

2.0 i 16V, 2.2 i 16V, 2.5 i V6, i 500 2.5, 2.6 i V6	C 20 SEL, X 20 XEV, X 25 XE, Y 26 SE, Z 22 SE	10/95 → 03/03		●		**VKDA 35509 T**		
2.5 i V6, 2.6 i V6	X 25 XE, Y 26 SE	10/95 → 06/05	~~SPS~~, CH T1086824 →, ~~HD~~	●				**VKDP 34500 T**
1.7 TD	X 17 DT (TC4EE1)	10/95 → 11/96		●		**VKDA 35508 T**		
1.7 TD, 2.0 DI 16V, 2.0 DTI 16V	X 17 DT (TC4EE1), X 20 DTH, X 20 DTL, Y 20 DTH	10/95 → 06/05	~~HD~~	●				**VKDP 34500 T**
2.0 DI 16V, 2.0 DTI 16V, 2.2 DTI 16V	X 20 DTH, X 20 DTL, Y 20 DTH, Y 22 DTR	11/96 → 03/03		●		**VKDA 35509 T**		
2.2 DTI 16V	Y 22 DTR	09/00 → 06/05	~~SPS~~, CH T1086824 →, ~~HD~~	●				**VKDP 34500 T**

VECTRA B

1.6 i, 1.6 i 16V, 1.8 i 16V, 2.0 i	16 LZ2, 20 NEJ, X 16 SZR, X 16 XEL, X 18 XE, X 18 XE1, Y 16 XE, Z 16 XE, Z 18 XE	11/96 → 03/03		●		**VKDA 35508 T**		
1.6 i, 1.6 i 16V, 1.8 i 16V, 2.0 i, 2.0 i 16V, 2.2 i 16V	16 LZ2, 20 NEJ, X 16 SZR, X 16 XEL, X 18 XE, X 18 XE1, X 20 XEV, Y 16 XE, Z 16 XE, Z 18 XE, Z 22 SE	11/96 → 06/05	~~HD~~	●				**VKDP 34500 T**
2.0 i 16V, 2.2 i 16V, 2.5 i V6, i 500 2.5, 2.6 i V6	X 20 XEV, X 25 XE, Y 26 SE, Z 22 SE	11/96 → 03/03		●		**VKDA 35509 T**		
2.5 i V6, 2.6 i V6	X 25 XE, Y 26 SE	11/96 → 06/05	~~SPS~~, ~~HD~~	●				**VKDP 34500 T**
2.0 DI 16V, 2.0 DTI 16V, 2.2 DTI 16V	X 20 DTH, X 20 DTL, Y 22 DTR	11/96 → 03/03		●		**VKDA 35509 T**		
2.0 DI 16V, 2.0 DTI 16V	X 20 DTH, X 20 DTL	11/96 → 06/05	~~HD~~	●				**VKDP 34500 T**
2.2 DTI 16V	Y 22 DTR	09/00 → 06/05	~~SPS~~, ~~HD~~	●				**VKDP 34500 T**

VECTRA C

1.8, 1.8 16V, 2.0 16V Turbo, 2.2 16V, 2.2 direct, 3.2 V6	Z 18 XE, Z 18 XEL, Z 20 NET, Z 22 SE, Z 22 YH, Z 32 SE	04/02 → 09/04	SPS	●		—		VKDP_____
1.8, 1.8 16V, 2.0 16V Turbo, 2.2 16V, 2.2 direct, 3.2 V6	Z 18 XE, Z 18 XEL, Z 20 NET, Z 22 SE, Z 22 YH, Z 32 SE	04/02 → 09/04	→| CH 41048789, 48045597, ~~SPS~~	●		VKDA_____		VKDP_____
1.9 CDTI, 2.0 DTI 16V, 2.2 DTI 16V	Y 20 DTH, Y 22 DTR, Z 19 DT, Z 19 DTH	04/02 → 09/04	SPS	●		—		VKDP_____
3.0 CDTI	Y 30 DT	06/03 → 09/04		●		—		VKDP_____
1.9 CDTI, 2.0 DTI 16V, 2.2 DTI 16V, 3.0 CDTI	Y 20 DTH, Y 22 DTR, Y 30 DT, Z 19 DT, Z 19 DTH	04/02 → 09/04	→| CH 41048789, 48045597, ~~SPS~~	●		VKDA_____		VKDP_____

OPEL .../...

VECTRA C

1.8, 2.0 Turbo, 2.2 direct, 3.2 V6	Z 18 XE, Z 20 NET, Z 22 YH, Z 32 SE	10/03 → 09/04		SPS	●		—		
1.9 CDTI, 2.0 DTI, 2.2 DTI	Y 20 DTH, Y 22 DTR, Z 19 DT, Z 19 DTH	10/03 → 09/04		SPS	●		—		
3.0 V6 CDTI	Y 30 DT	10/03 → 09/04			●		—		

VECTRA C GTS

1.8 16V, 2.0 16V Turbo, 2.2 16V, 2.2 direct, 3.2 V6	Z 18 XE, Z 20 NET, Z 22 SE, Z 22 YH, Z 32 SE	08/02 → 09/04		SPS	●		—		—
1.9 CDTI, 2.0 DTI 16V, 2.2 DTI 16V	Y 20 DTH, Y 22 DTR, Z 19 DT, Z 19 DTH	08/02 → 09/04		SPS	●		—		—
3.0 CDTI	Y 30 DT	06/03 → 09/04			●		—		—
VECTRA C GTS	Y 20 DTH, Y 22 DTR, Y 30 DT, Z 19 DT, Z 19 DTH	08/02 → 09/04		→| CH 41048789, 48045597, ~~SPS~~	●		VKDA____		—

VIVARO

VIVARO		08/01 → 11/03			●		**VKDA 35622 T**		

ZAFIRA A

1.6 16V, 1.6 CNG, 1.8 16V, 2.0 OPC, 2.2 16V		04/99 → 09/04			●		**VKDA 35508 T**		
1.6 16V, 1.6 CNG, 1.8 16V		04/99 → 06/05			●				**VKDP 34500 T**
2.2 16V		09/00 → 06/05			●				**VKDP 34500 T**
2.0 DI 16V, 2.0 DTI 16V, 2.2 DTI 16V		10/99 → 09/04			●		**VKDA 35508 T**		**VKDP 34500 T**

ZAFIRA B

ZAFIRA B		07/05 → 01/06			●		—		

PEUGEOT

106 I

106 I	TUD5	05/96 → 01/06			●		**VKDA 35302 T**	**VKD 35002 T**	**VKDP 33300 T**
1.0 i, 1.1 i	TU1JP, TU1M, TU9M	05/96 → 01/06				○	**VKDA 27004**		
1.0 i, 1.1 i	TU1JP, TU1M, TU9M	05/96 → 01/06				○	**VKDA 27003**		
1.4 i, 1.6 i, 1.6 S16	TU3JP, TU5J2, TU5J4, TU5JP	05/96 → 01/06				○	**VKDA 27004**		
1.5 D	TUD5	05/96 → 01/06				○	**VKDA 27004**		

106 II

1.0	TU9M	09/91 → 07/92			●		**VKDA 35300 T**	**VKD 35002 T**	**VKDP 33300 T**
1.0	TU9M	08/92 → 04/96			●		**VKDA 35302 T**	**VKD 35002 T**	**VKDP 33300 T**
1.1	TU1M	09/91 → 07/92			●		**VKDA 35300 T**	**VKD 35002 T**	**VKDP 33300 T**
1.1, 1.3	TU1M	08/92 → 04/96			●		**VKDA 35302 T**	**VKD 35002 T**	**VKDP 33300 T**
1.4	TU3J2/Z, TU3M, TU3MC	09/91 → 07/92			●		**VKDA 35300 T**	**VKD 35002 T**	**VKDP 33300 T**

1.4, 1.6	TU3J2/Z, TU3M, TU3MC, TU5J2, TU5JP	08/92 → 04/96		●		VKDA 35302 T	VKD 35002 T	VKDP 33300 T
1.4 D, 1.5 D	TUD3Y, TUD5	09/92 → 04/96		●		VKDA 35302 T	VKD 35002 T	VKDP 33300 T
1.0, 1.1	TU1M, TU9M	09/91 → 04/96			○	VKDA 27004		
1.0, 1.1	TU1M, TU9M	09/91 → 04/96			○	VKDA 27003		
1.3, 1.4, 1.6	TU3J2/Z, TU3M, TU3MC, TU5J2, TU5JP	09/91 → 04/96			○	VKDA 27004		
1.4 D, 1.5 D	TUD3Y, TUD5	09/92 → 04/96			○	VKDA 27003		
107								
107		06/05 → 08/05		●		—		
205 I								
205 I		02/83 → 10/87		●		VKDA 35303 T	VKD 35002 T	VKDP 33300 T
205 I		02/83 → 10/87			○	VKDA 27000		
205 I								
205 I		04/86 → 12/94		●		VKDA 35303 T	VKD 35002 T	VKDP 33300 T
205 I		04/86 → 12/94			○	VKDA 27000		
205 II								
1.0, 1.1, 1.2, 1.3 Rallye, 1.4, 1.4 CAT, 1.6, 1.6 Aut., 1.6 GTI, 1.9 GTI, 1.9 GTI CAT		01/87 → 09/98		●		VKDA 35303 T	VKD 35002 T	VKDP 33300 T
1.7 Diesel, 1.7 TD, 1.9 Diesel		07/87 → 09/98		●		VKDA 35303 T	VKD 35002 T	VKDP 33300 T
1.0, 1.1, 1.2, 1.3 Rallye, 1.4, 1.4 CAT, 1.6, 1.6 Aut., 1.6 GTI, 1.9 GTI, 1.9 GTI CAT		01/87 → 09/98			○	VKDA 27000		
1.7 Diesel, 1.7 TD, 1.9 Diesel		07/87 → 09/98			○	VKDA 27000		
205 II								
1.7 Diesel		03/94 → 12/98		●		VKDA 35303 T	VKD 35002 T	VKDP 33300 T
1.7 Diesel		03/94 → 01/06			○	VKDA 27000		
206								
1.1 i	TU1JP	09/98 → 12/04	HB	●		VKDA 35308 T	VKD 35002 T	
1.1 i	TU1JP	09/98 → 12/04	HB	●		VKDA 35309 T	VKD 35002 T	
1.1 i	TU1JP	09/98 → 12/04	HD	●		VKDA 35309 T	VKD 35002 T	
1.1 i	TU1JP	09/98 → 02/06	HB	●				VKDP 32301 T
1.4 16V, 1.6 16V, 1.6 i, 2.0 RC, 2.0 S16	DEW10J4, ET3J4, EW10J4, EW10J4S, TU5JP, TU5JP4	09/98 → 12/04		●		VKDA 35308 T	VKD 35002 T	
1.4 i	TU3JP	09/98 → 12/04		●		VKDA 35308 T	VKD 35002 T	VKDP 33303 T
2.0 S16	DEW10J4, EW10J4	04/99 → 02/06		●				VKDP 33306 T
1.4 HDi eco 70	DV4TD	09/01 → 12/04	3	●		VKDA 35309 T	VKD 35002 T	VKDP 33303 T
1.4 HDi eco 70	DV4TD	09/01 → 12/04	5	●		VKDA 35308 T	VKD 35002 T	VKDP 33303 T
1.6 HDi FAP 110, 1.9 D, 2.0 HDI 90	DV6TED4, DW10TD, DW8	09/98 → 12/04		●		VKDA 35308 T	VKD 35002 T	
1.9 D	DW8	09/98 → 11/01		●				VKDP 33303 T
2.0 HDI 90	DW10TD	12/99 → 02/06		●				VKDP 33306 T
Entreprise: 1.1 i	TU1JP	09/98 → 12/04		●		VKDA 35309 T	VKD 35002 T	
Entreprise: 1.4 HDi eco 70	DV4TD	09/01 → 12/04		●		VKDA 35309 T	VKD 35002 T	

PEUGEOT .../...

Entreprise: 1.9 D	DW8	09/98 → 11/01		●		VKDA 35309 T	VKD 35002 T	
1.1 i	TU1JP	09/98 → 12/04	, HD		○	VKDA 27007		
1.1 i	TU1JP	09/98 → 12/04	,		○	VKDA 27007		
1.4 16V, 1.4 i	ET3J4, TU3JP	09/98 → 12/04			○	VKDA 27007		
1.6 i	TU5JP	09/98 → 12/00			○	VKDA 27007		
1.6 16V	TU5JP4	11/02 → 12/04			○	VKDA 27007		
2.0 RC, 2.0 S16	DEW10J4, EW10J4, EW10J4S	11/02 → 12/04			○	VKDA 27007		
1.4 HDi eco 70, 1.6 HDi FAP 110, 1.9 D, 2.0 HDI 90	DV4TD, DV6TED4, DW10TD, DW8	09/98 → 12/04			○	VKDA 27007		
Entreprise: 1.1 i	TU1JP	09/98 → 12/04			○	VKDA 27007		
206 CC								
206 CC		09/00 → 12/04		●		VKDA 35308 T	VKD 35002 T	VKDP 33306 T
1.6 HDi FAP 110		04/05 → 05/06		●		VKDA 35308 T	VKD 35002 T	
206 SW								
1.1, 1.4, 1.6 16V, 2.0 16V		07/02 → 12/04		●		VKDA 35308 T	VKD 35002 T	VKDP 33306 T
1.4 HDi, 1.6 HDi FAP 110, 2.0 HDi		07/02 → 12/04		●		VKDA 35308 T	VKD 35002 T	
1.4 HDi		07/02 → 02/06		●				VKDP 33306 T
2.0 HDi		07/02 → 02/06		●				VKDP 33306 T
206 SW		07/02 → 12/04			○	VKDA 27007		
305								
1.3, 1.5, 1.6, 1.9		01/84 → 07/90		●		VKDA 35303 T	VKD 35002 T	
1.9 Diesel		01/84 → 12/88		●		VKDA 35303 T	VKD 35002 T	
306								
1.1, 1.4, 1.6, 1.8, 1.8 16V, 2.0 16V, 2.0 S16, 2.0 XSi	TU1M, TU3JP, TU3MC, TU5JP, XU10J2, XU10J4, XU10J4R, XU10J4RS, XU10J4Z, XU7JP, XU7JP4	05/93 → 01/06		●		VKDA 35307 T	VKD 35002 T	VKDP 33300 T
1.1, 1.4, 1.6, 1.8, 1.8 16V, 2.0 16V, 2.0 S16, 2.0 XSi	TU1M, TU3JP, TU3MC, TU5JP, XU10J2, XU10J4, XU10J4R, XU10J4RS, XU10J4Z, XU7JP, XU7JP4	05/93 → 01/06		●		VKDA 35306 T	VKD 35002 T	VKDP 33300 T
1.8 D, 1.9 D, 1.9 DT, 2.0 HDI 90	DW10TD, DW8, DW8B, XUD7, XUD9A, XUD9BSD, XUD9TE, XUD9Y	05/93 → 01/06		●		VKDA 35307 T	VKD 35002 T	VKDP 33300 T
1.8 D, 1.9 D, 1.9 DT, 2.0 HDI 90	DW10TD, DW8, DW8B, XUD7, XUD9A, XUD9BSD, XUD9TE, XUD9Y	05/93 → 01/06		●		VKDA 35306 T	VKD 35002 T	VKDP 33300 T
1.1, 1.4, 1.6, 1.8, 2.0 S16, 2.0 XSi	TU1M, TU3JP, TU3MC, TU5JP, XU10J2, XU10J4,							

	XU10J4RS, XU10J4Z, XU7JP	05/93 → 06/97		○	VKDA 27000		
1.1, 1.4, 1.6, 1.8	TU1M, TU3JP, TU3MC, TU5JP, XU7JP	07/97 → 01/06	~~HD~~	○	VKDA 27000		
1.1, 1.4, 1.6, 1.8	TU1M, TU3JP, TU3MC, TU5JP, XU7JP	07/97 → 01/06	HD	○	VKDA 27001		
1.8 16V	XU7JP4	03/97 → 01/06	~~HD~~	○	VKDA 27000		
1.8 16V	XU7JP4	03/97 → 01/06	HD	○	VKDA 27001		
2.0 16V	XU10J4R	03/97 → 01/06	~~HD~~	○	VKDA 27000		
2.0 16V	XU10J4R	03/97 → 01/06	HD	○	VKDA 27001		
2.0 S16, 2.0 XSi	XU10J2, XU10J4, XU10J4RS, XU10J4Z	07/97 → 01/06	~~HD~~	○	VKDA 27000		
2.0 S16, 2.0 XSi	XU10J2, XU10J4, XU10J4RS, XU10J4Z	07/97 → 01/06	HD	○	VKDA 27001		
1.8 D, 1.9 D, 1.9 DT	XUD7, XUD9A, XUD9TE, XUD9Y	05/93 → 06/97		○	VKDA 27000		
1.8 D, 1.9 D, 1.9 DT, 2.0 HDI 90	DW10TD, DW8, DW8B, XUD7, XUD9A, XUD9BSD, XUD9TE, XUD9Y	07/97 → 01/06	~~HD~~	○	VKDA 27000		
1.8 D, 1.9 D, 1.9 DT, 2.0 HDI 90	DW10TD, DW8, DW8B, XUD7, XUD9A, XUD9BSD, XUD9TE, XUD9Y	07/97 → 01/06	HD	○	VKDA 27001		
306 Break							
1.4, 1.6, 1.8, 1.8 16V, 2.0	TU3JP, TU5JP, XU10J4R, XU7JP, XU7JP4	03/97 → 01/06	⌀	●	VKDA 35307 T	VKD 35002 T	VKDP 33300 T
1.4, 1.6, 1.8, 1.8 16V, 2.0	TU3JP, TU5JP, XU10J4R, XU7JP, XU7JP4	03/97 → 01/06	⊖	●	VKDA 35306 T	VKD 35002 T	VKDP 33300 T
1.9 D, 1.9 TD, 2.0 HDI 90	DW10TD, DW8, DW8B, XUD9A, XUD9BSD, XUD9TE.	02/97 → 01/06	⌀	●	VKDA 35307 T	VKD 35002 T	VKDP 33300 T
1.9 D, 1.9 TD, 2.0 HDI 90	DW10TD, DW8, DW8B, XUD9A, XUD9BSD, XUD9TE.	02/97 → 01/06	⊖	●	VKDA 35306 T	VKD 35002 T	VKDP 33300 T
306 Break	TU3JP, TU5JP, XU10J4R, XU7JP, XU7JP4	02/97 → 01/06		○	VKDA 27001		
306							
306		03/94 → 01/06		●	VKDA 35306 T	VKD 35002 T	VKDP 33300 T
1.6		04/96 → 06/97		○	VKDA 27000		
1.6		07/97 → 01/06		○	VKDA 27001		
1.8		03/94 → 06/97		○	VKDA 27000		
1.8, 1.8 16V		07/97 → 01/06		○	VKDA 27001		
2.0		03/94 → 06/97		○	VKDA 27000		
2.0 16V		03/97 → 01/06		○	VKDA 27001		
2.0		07/97 → 01/06		○	VKDA 27001		
306							
1.1, 1.4 SL, 1.6, 1.6 SR, 1.8 16V, 1.8 ST, 2.0, 2.0 S16, 2.0 ST	TU1M, TU3JP, TU3MC, TU5JP, XU10J2, XU10J4, XU10J4R, XU10J4Z, XU7JP, XU7JP4	06/94 → 01/06	⌀	●	VKDA 35307 T	VKD 35002 T	VKDP 33300 T

PEUGEOT .../...

1.1, 1.4 SL, 1.6, 1.6 SR, 1.8 16V, 1.8 ST, 2.0, 2.0 S16, 2.0 ST	TU1M, TU3JP, TU3MC, TU5JP, XU10J2, XU10J4, XU10J4R, XU10J4Z, XU7JP, XU7JP4	06/94 → 01/06	●		**VKDA 35306 T**	**VKD 35002 T**	**VKDP 33300 T**
1.9 D, 1.9 SLD, 1.9 SRDT, 2.0 HDI 90	DW10TD, DW8, DW8B, XUD9A, XUD9BSD, XUD9TE, XUD9Y	06/94 → 01/06	●		**VKDA 35307 T**	**VKD 35002 T**	**VKDP 33300 T**
1.9 D, 1.9 SLD, 1.9 SRDT, 2.0 HDI 90	DW10TD, DW8, DW8B, XUD9A, XUD9BSD, XUD9TE, XUD9Y	06/94 → 01/06	●		**VKDA 35306 T**	**VKD 35002 T**	**VKDP 33300 T**
1.1	TU1M	06/94 → 06/97		○	**VKDA 27000**		
1.1	TU1M	07/97 → 01/06		○	**VKDA 27001**		
1.4 SL	TU3JP, TU3MC	06/94 → 06/97		○	**VKDA 27000**		
1.4 SL	TU3JP, TU3MC	07/97 → 01/06		○	**VKDA 27001**		
1.6 SR	TU5JP	06/94 → 06/97		○	**VKDA 27000**		
1.6, 1.6 SR	TU5JP	07/97 → 01/06		○	**VKDA 27001**		
1.8 ST	XU7JP	06/94 → 06/97		○	**VKDA 27000**		
1.8 16V	XU7JP4	03/97 → 01/06		○	**VKDA 27001**		
1.8 ST	XU7JP	07/97 → 01/06		○	**VKDA 27001**		
2.0 S16, 2.0 ST	XU10J2, XU10J4, XU10J4Z	06/94 → 06/97		○	**VKDA 27000**		
2.0	XU10J4R	03/97 → 01/06		○	**VKDA 27001**		
2.0 S16, 2.0 ST	XU10J2, XU10J4, XU10J4Z	07/97 → 01/06		○	**VKDA 27001**		
1.9 SLD, 1.9 SRDT	XUD9A, XUD9TE, XUD9Y	06/94 → 06/97		○	**VKDA 27000**		
1.9 D, 1.9 SLD, 1.9 SRDT, 2.0 HDI 90	DW10TD, DW8, DW8B, XUD9A, XUD9BSD, XUD9TE, XUD9Y	07/97 → 01/06		○	**VKDA 27001**		
307							
307		08/00 → 08/05	●		**VKDA 35315 T**	**VKD 35002 T**	**VKDP 33304 T**
307		08/00 → 08/05		○	**VKDA 40304 T**		
307 CC							
307 CC		10/03 → 08/05	●		**VKDA 35315 T**	**VKD 35002 T**	**VKDP 33304 T**
307 CC		10/03 → 08/05		○	**VKDA 40304 T**		
307							
307		03/02 → 08/05	●		**VKDA 35315 T**	**VKD 35002 T**	**VKDP 33304 T**
307		03/02 → 08/05		○	**VKDA 40304 T**		
307 SW							
307 SW		03/02 → 08/05	●		**VKDA 35315 T**	**VKD 35002 T**	**VKDP 33304 T**
307 SW		03/02 → 08/05		○	**VKDA 40304 T**		
309 I							
309 I		10/85 → 12/89	●		**VKDA 35303 T**	**VKD 35002 T**	**VKDP 33300 T**

309 I ... 10/85 → 12/89 ...		○	VKDA 27000		
309 II					
309 II ... 07/89 → 12/93 ...	●		VKDA 35303 T	VKD 35002 T	VKDP 33300 T
309 II ... 07/89 → 12/93 ...		○	VKDA 27000		
405 I					
405 I ... 01/87 → 06/92 ...	●		VKDA 35305 T	VKD 35002 T	VKDP 33300 T
405 I ... 07/92 → 12/93 ...	●		VKDA 35304 T	VKD 35002 T	VKDP 33300 T
4X4: 405 I ... 04/88 → 06/92 ...	●		VKDA 35305 T	VKD 35002 T	VKDP 33300 T
4X4: 405 I ... 07/92 → 12/92 ...	●		VKDA 35304 T	VKD 35002 T	VKDP 33300 T
405 I ... 01/87 → 12/93 ..., FWD		○	VKDA 27006		
405 I Break					
405 I Break ... 10/88 → 06/92 ...	●		VKDA 35305 T	VKD 35002 T	VKDP 33300 T
405 I Break ... 07/92 → 12/93 ...	●		VKDA 35304 T	VKD 35002 T	VKDP 33300 T
4X4: 1.9 ... 10/88 → 06/92 ...	●		VKDA 35305 T	VKD 35002 T	VKDP 33300 T
4X4: 1.9 ... 07/92 → 08/92 ...	●		VKDA 35304 T	VKD 35002 T	VKDP 33300 T
405 I Break ... 10/88 → 08/92 ..., FWD		○	VKDA 27006		
405 II					
405 II ... 08/92 → 10/95 ...	●		VKDA 35304 T	VKD 35002 T	VKDP 33300 T
4X4: 405 II ... 08/92 → 10/95 ...	●		VKDA 35304 T	VKD 35002 T	VKDP 33300 T
405 II ... 08/92 → 10/95 ..., FWD		○	VKDA 27006		
405 II Break					
405 II Break ... 08/92 → 10/96 ...	●		VKDA 35304 T	VKD 35002 T	VKDP 33300 T
4X4: 2.0 ... 08/92 → 10/96 ...	●		VKDA 35304 T	VKD 35002 T	VKDP 33300 T
405 II Break ... 08/92 → 10/96 ..., FWD		○	VKDA 27006		
406					
406 ... 11/95 → 05/04 ... ~~AAS~~	●		VKDA 35312 T	VKD 35007 T	
1.6, 1.8, 1.8 16V ... 11/95 → 05/04 ... →| CH 07811	●				VKDP 33308 T
1.6, 1.8, 1.8 16V ... 11/95 → 05/04 ... CH 07812 |→	●				VKDP 32302 T
1.8 16V, 2.0 16V HPi ... 10/00 → 05/04 ...	●				VKDP 32302 T
2.0 16V ... 11/95 → 05/04 ... →| CH 08546	●				VKDP 33308 T
2.0 16V ... 11/95 → 05/04 ... CH 08547 |→	●				VKDP 32302 T
2.0 Turbo, 2.2, 3.0 24V, 3.0 V6 ... 04/96 → 05/04 ...	●				VKDP 33308 T
1.9 TD ... 01/96 → 05/04 ...	●				VKDP 33308 T
1.9 D ... 10/96 → 05/04 ... →| CH 07811	●				VKDP 33308 T
1.9 D ... 10/96 → 05/04 ... CH 07812 |→	●				VKDP 32302 T
2.0 HDI 90, 2.1 TD 12V, 2.2 HDi FAP ... 01/96 → 05/04 ...	●				VKDP 33308 T
2.0 HDI 110 ... 06/98 → 08/01 ... →| CH 08546	●				VKDP 33308 T
2.0 HDI 110 ... 06/98 → 08/01 ... CH 08547 |→	●				VKDP 32302 T
2.0 HDi 110 FAP ... 08/01 → 05/04 ...	●				VKDP 32302 T
406 ... 11/95 → 05/04 ... AAS		○	—		
406 ... 11/95 → 05/04 ... ~~AAS~~		○	VKDA 40300 T		
406 Break					
406 Break ... 10/96 → 08/05 ... ~~AAS~~	●		VKDA 35312 T	VKD 35007 T	
1.8 16V, 2.0 16V HPi ... 10/96 → 02/06 ...	●				VKDP 32302 T
1.8 ... 05/97 → 02/06 ... →| CH 07811	●				VKDP 33308 T
1.8 ... 05/97 → 02/06 ... CH 07812 |→	●				VKDP 32302 T
2.0 Turbo, 2.2, 3.0 24V, 3.0 V6 ... 10/96 → 02/06 ...	●				VKDP 33308 T
2.0 16V ... 10/96 → 02/06 ... →| CH 08546	●				VKDP 33308 T

PEUGEOT .../...

2.0 16V	10/96 → 02/06	CH 08547 →| ●				**VKDP 32302 T**
1.9 TD	10/96 → 02/06		●				**VKDP 33308 T**
1.9 D	10/96 → 02/06	→| CH 07811	●				**VKDP 33308 T**
1.9 D	10/96 → 02/06	CH 07812 →| ●				**VKDP 32302 T**
2.0 HDI 90, 2.1 TD 12V, 2.2 HDI FAP	10/96 → 02/06		●				**VKDP 33308 T**
2.0 HDI 110	02/99 → 08/01	→| CH 08546	●				**VKDP 33308 T**
2.0 HDI 110	02/99 → 08/01	CH 08547 →| ●				**VKDP 32302 T**
2.0 HDi 110 FAP	08/01 → 02/06		●				**VKDP 32302 T**
406 Break	10/96 → 08/05	AAS		○	—		
406 Break	10/96 → 08/05	~~AAS~~		○	**VKDA 40300 T**		

406

406	03/97 → 08/05	~~AAS~~	●		**VKDA 35312 T**	**VKD 35007 T**	
406	03/97 → 08/05	~~AAS~~		○	**VKDA 40302 T**		

407

407	05/04 → 05/06		●		***VKDS 13500***		VKDP____
1.8, 1.8 16V, 2.0, 2.0 16V, 2.2, 2.2 16V, 3.0	05/04 → 05/06	O 16"	●		—		VKDP____
1.8, 1.8 16V, 2.0, 2.0 16V, 2.2, 2.2 16V, 3.0	05/04 → 05/06	O 17"	●		—		VKDP____
1.6 HDi 110 FAP, 2.0 HDi 135 FAP	05/04 → 08/05	O 16"	●		—		VKDP____
1.6 HDi 110 FAP, 2.0 HDi 135 FAP	05/04 → 08/05	O 17"	●		—		VKDP____

407 SW

407 SW	05/04 → 05/06		●		***VKDS 13500***		VKDP____
1.8, 1.8 16V, 2.0, 2.0 16V, 2.2, 2.2 16V, 3.0	05/04 → 05/06	O 16"	●		—		VKDP____
1.8, 1.8 16V, 2.0, 2.0 16V, 2.2, 2.2 16V, 3.0	05/04 → 05/06	O 17"	●		—		VKDP____
1.6 HDi 110 FAP, 2.0 HDi 135 FAP	05/04 → 08/05	O 16"	●		—		VKDP____
1.6 HDi 110 FAP, 2.0 HDi 135 FAP	05/04 → 08/05	O 17"	●		—		VKDP____

505

2.2 Turbo Injection, 2.8 GTI V6	01/87 → 12/93		●		—	**VKD 35001 T**	

605

605	06/89 → 09/99		●		**VKDA 35319 T**	**VKD 35007 T**	
605	06/89 → 09/99	~~AAS~~, ~~HD~~	●				**VKDP 33308 T**

607

607	02/00 → 06/03	~~AAS~~	●		**VKDA 35319 T**	**VKD 35007 T**	

806

806	06/94 → 08/02		●		**VKDA 35317 T**	**VKD 35018 T**	**VKDP 33301 T**

807									
807			06/02 → 01/06		●		**VKDA 35317 T**	**VKD 35018 T**	—
EXPERT									
1.6			02/96 → 09/00		●		**VKDA 35317 T**	**VKD 35018 T**	**VKDP 33301 T**
2.0			07/00 → 09/00		●		**VKDA 35317 T**	**VKD 35018 T**	**VKDP 33301 T**
1.9 D, 1.9 TD, 2.0 HDI			02/96 → 09/00		●		**VKDA 35317 T**	**VKD 35018 T**	**VKDP 33301 T**
PARTNER									
1.1, 1.4	TU1M, TU3JP		06/96 → 08/05	475Kg	●		**VKDA 35307 T**	**VKD 35002 T**	**VKDP 33300 T**
1.1, 1.4	TU1M, TU3JP		06/96 → 08/05	600Kg, ⌀	●		**VKDA 35307 T**	**VKD 35002 T**	**VKDP 33300 T**
1.1, 1.4	TU1M, TU3JP		06/96 → 08/05	600Kg, ⌀	●		**VKDA 35306 T**	**VKD 35002 T**	**VKDP 33300 T**
1.1, 1.4	TU1M, TU3JP		06/96 → 08/05	765Kg	●		**VKDA 35306 T**	**VKD 35002 T**	**VKDP 33300 T**
1.1, 1.4	TU1M, TU3JP		06/96 → 08/05	800Kg, ~~HD~~	●		**VKDA 35306 T**	**VKD 35002 T**	**VKDP 33300 T**
1.1, 1.4	TU1M, TU3JP		06/96 → 08/05	800Kg, HD, ⌀	●		**VKDA 35307 T**	**VKD 35002 T**	**VKDP 33300 T**
1.1, 1.4	TU1M, TU3JP		06/96 → 08/05	800Kg, HD, ⌀	●		**VKDA 35306 T**	**VKD 35002 T**	**VKDP 33300 T**
1.1, 1.4	TU1M, TU3JP		06/96 → 08/05		●		**VKDA 35306 T**	**VKD 35002 T**	**VKDP 33300 T**
1.4 BiFuel			04/03 → 08/05		●		**VKDA 35306 T**	**VKD 35002 T**	**VKDP 33300 T**
1.8 D, 1.9 D	DW8, XUD7, XUD9A		06/96 → 08/05	475Kg	●		**VKDA 35307 T**	**VKD 35002 T**	**VKDP 33300 T**
1.8 D, 1.9 D	DW8, XUD7, XUD9A		06/96 → 08/05	600Kg, ⌀	●		**VKDA 35307 T**	**VKD 35002 T**	**VKDP 33300 T**
1.8 D, 1.9 D	DW8, XUD7, XUD9A		06/96 → 08/05	600Kg, ⌀	●		**VKDA 35306 T**	**VKD 35002 T**	**VKDP 33300 T**
1.8 D, 1.9 D	DW8, XUD7, XUD9A		06/96 → 08/05	765Kg	●		**VKDA 35306 T**	**VKD 35002 T**	**VKDP 33300 T**
1.8 D, 1.9 D	DW8, XUD7, XUD9A		06/96 → 08/05	800Kg, ~~HD~~	●		**VKDA 35306 T**	**VKD 35002 T**	**VKDP 33300 T**
1.8 D, 1.9 D	DW8, XUD7, XUD9A		06/96 → 08/05	800Kg, HD, ⌀	●		**VKDA 35307 T**	**VKD 35002 T**	**VKDP 33300 T**
1.8 D, 1.9 D	DW8, XUD7, XUD9A		06/96 → 08/05	800Kg, HD, ⌀	●		**VKDA 35306 T**	**VKD 35002 T**	**VKDP 33300 T**
1.8 D, 1.9 D	DW8, XUD7, XUD9A		06/96 → 08/05		●		**VKDA 35306 T**	**VKD 35002 T**	**VKDP 33300 T**
2.0 HDi	DW10TD		04/00 → 08/05		●		**VKDA 35306 T**	**VKD 35002 T**	**VKDP 33300 T**
4X4: PARTNER	DW10TD, DW8B		04/04 → 08/05		●		**VKDA 35306 T**	**VKD 35002 T**	
PARTNER	TU1M, TU3JP		06/96 → 08/05			○	**VKDA 27006**		
4X4: PARTNER	DW10TD, DW8B		04/04 → 08/05			○	**VKDA 27006**		
PARTNER									
1.1, 1.4, 1.6 16V, 1.8	TU1JP, TU1M, TU3JP, TU5JP4, XU7JB		06/96 → 08/05	⌀	●		**VKDA 35307 T**	**VKD 35002 T**	**VKDP 33300 T**
1.1, 1.4, 1.6 16V, 1.8	TU1JP, TU1M, TU3JP, TU5JP4, XU7JB		06/96 → 08/05	⌀	●		**VKDA 35306 T**	**VKD 35002 T**	**VKDP 33300 T**
1.9 D	DW8, DW8B, XUD9A		06/96 → 08/05	⌀	●		**VKDA 35307 T**	**VKD 35002 T**	**VKDP 33300 T**
1.9 D	DW8, DW8B, XUD9A		06/96 → 08/05	⌀	●		**VKDA 35306 T**	**VKD 35002 T**	**VKDP 33300 T**
2.0 HDI	DW10TD		02/00 → 12/01	⌀	●		**VKDA 35307 T**	**VKD 35002 T**	**VKDP 33300 T**
2.0 HDI	DW10TD		02/00 → 12/01	⌀	●		**VKDA 35306 T**	**VKD 35002 T**	**VKDP 33300 T**
2.0 HDI	DW10TD		12/01 → 08/05		●		—	**VKD 35002 T**	**VKDP 33300 T**
PARTNER Minibus	TU1JP, TU1M, TU3JP, TU5JP4, XU7JB		06/96 → 08/05			○	**VKDA 27006**		

PEUGEOT

BOXER I									
2.0 i			06/94 → 04/02		●		**VKDA 35313 T**	**VKD 35017 T**	
2.0 i			06/94 → 04/02	1000, 1400Kg	●				**VKDP 33311 T**
1.9 D, 1.9 TD, 2.0 HDI, 2.5 D, 2.5 TD, 2.5 TDI, 2.8 HDI			03/94 → 04/02		●		**VKDA 35313 T**	**VKD 35017 T**	
1.9 D, 1.9 TD, 2.0 HDI, 2.5 D, 2.5 TD, 2.5 TDI, 2.8 HDI			03/94 → 04/02	1000, 1400Kg	●				**VKDP 33311 T**
4X4: BOXER I			07/99 → 04/02		●		**VKDA 35313 T**	**VKD 35017 T**	
4X4: BOXER I			07/99 → 04/02	1000, 1400Kg	●				**VKDP 33311 T**
BOXER I									
2.0 i			03/94 → 04/02		●		**VKDA 35313 T**	**VKD 35017 T**	**VKDP 33311 T**

PEUGEOT .../...

1.9 D, 1.9 TD, 2.5 D, 2.5 TD,					
2.5 TDI, 2.8 HDI 03/94 → 04/02	●		**VKDA 35313 T**	**VKD 35017 T**	**VKDP 33311 T**
4X4: BOXER I 07/96 → 04/02	●		**VKDA 35313 T**	**VKD 35017 T**	**VKDP 33311 T**
BOXER I					
2.0 i 06/94 → 04/02	●		**VKDA 35313 T**	**VKD 35017 T**	
2.0 i 06/94 → 04/02 1000, 1400Kg	●				**VKDP 33311 T**
1.9 TD, 2.5 D, 2.5 TD,					
2.5 TDI, 2.8 HDI 03/94 → 04/02	●		**VKDA 35313 T**	**VKD 35017 T**	
1.9 TD, 2.5 D, 2.5 TD,					
2.5 TDI, 2.8 HDI 03/94 → 04/02 1000, 1400Kg	●				**VKDP 33311 T**
4X4: BOXER I 07/99 → 04/02	●		**VKDA 35313 T**	**VKD 35017 T**	
4X4: BOXER I 07/99 → 04/02 1000, 1400Kg	●				**VKDP 33311 T**
BOXER II					
BOXER II 04/02 → 08/05	●		**VKDA 35321 T**	**VKD 35017 T**	
BOXER II 04/02 → 02/06 1000, 1400Kg	●				**VKDP 33311 T**
4X4: 2.8 HDi 04/02 → 08/05	●		**VKDA 35321 T**	**VKD 35017 T**	
4X4: 2.8 HDi 04/02 → 02/06 1000, 1400Kg	●				**VKDP 33311 T**
BOXER II					
BOXER II 04/02 → 08/05	●		**VKDA 35321 T**	**VKD 35017 T**	**VKDP 33311 T**
4X4: 2.8 HDi 04/02 → 08/05	●		**VKDA 35321 T**	**VKD 35017 T**	**VKDP 33311 T**
BOXER II					
BOXER II 04/02 → 08/05	●		**VKDA 35321 T**	**VKD 35017 T**	
BOXER II 04/02 → 02/06 1000, 1400Kg	●				**VKDP 33311 T**
4X4: 2.8 HDi 04/02 → 08/05	●		**VKDA 35321 T**	**VKD 35017 T**	
4X4: 2.8 HDi 04/02 → 02/06 1000, 1400Kg	●				**VKDP 33311 T**
J5					
J5 01/83 → 01/06	●		—	**VKD 35016 T**	
1.8 01/83 → 11/88 1000, 1400Kg,					
CH 0244301 →	●				**VKDP 33311 T**
1.9 D 10/90 → 07/04 1000, 1400Kg	●				**VKDP 33311 T**
4X4: J5 10/90 → 01/06	●		—	**VKD 35016 T**	
4X4: J5 10/90 → 07/04 1000, 1400Kg	●				**VKDP 33311 T**
J5					
J5 09/81 → 01/06	●		—	**VKD 35016 T**	
2.0 09/81 → 09/90 CH 0244301 →	●				**VKDP 33311 T**
2.0 10/90 → 07/04	●				**VKDP 33311 T**
1.9 D, 2.5 D, 2.5 TD 10/90 → 07/04	●				**VKDP 33311 T**
2.5 D 09/81 → 09/90 CH 0244301 →	●				**VKDP 33311 T**
4X4: J5 10/90 → 01/06	●		—	**VKD 35016 T**	**VKDP 33311 T**
J5					
J5 09/81 → 01/06	●		—	**VKD 35016 T**	
J5 09/81 → 07/04 1000, 1400Kg	●				**VKDP 33311 T**
4X4: J5 10/90 → 01/06	●		—	**VKD 35016 T**	
4X4: J5 10/90 → 07/04 1000, 1400Kg	●				**VKDP 33311 T**

PROTON

SATRIA

1.3 (C96), 1.5 (C97), 1.6 (C98)	09/94 → 04/03		●		VKDC 81504 T

WIRA

1.3 (C96), 1.5 (C97), 1.6 (C98), 1.8 (C99)	05/93 → 04/03		●		VKDC 81504 T
2.0 D (C95)	04/96 → 04/03		●		VKDC 81504 T

RENAULT

AVANTIME

AVANTIME	09/01 → 05/03		●	VKDA 35620 T	VKD 35001 T	VKDP 32601 T

CLIO I

1.1 (B571, C571), 1.2 (357F, 357G, 357J, 357L, 357R, 5/357K, 5/357Y, 557F, 557G, 557J, 557L, 557R, B577, B57A, B57R, B57S, C577, C57A, C57R, C57S)	05/90 → 09/98		●	VKDA 35600 T		VKDP 31601 T
1.4 (557B, B573, B57B, B57P, C573, C57B)	01/91 → 09/98	Man. GBX	●	VKDA 35600 T		VKDP 31601 T
1.4 (557B, B573, B57B, B57P, C573, C57B)	01/91 → 09/98	Auto. GBX	●	VKDA 35601 T		VKDP 31601 T
1.4 (B/C57T, B/C57Y, B57J, C57J)	01/91 → 09/98	Man. GBX	●	VKDA 35600 T		VKDP 31601 T
1.4 (B/C57T, B/C57Y, B57J, C57J)	01/91 → 09/98	Auto. GBX	●	VKDA 35601 T		VKDP 31601 T
1.7 (B/C574), 1.8 (B/C578, B/C57C, B/C57U), 1.8 (357A, 357D, 357E, 357U, 357V, 557A, 557D, 557U), 1.8 16V (C575, C57D), 1.8 Rsi (C579, C57H), Williams (C57M)	01/91 → 09/98		●	VKDA 35601 T		VKDP 31601 T
1.9 D (B576, B57L, C576, C57L), 1.9 D (357N, 557N, 657H, 657M, 657N)	01/91 → 09/98		●	VKDA 35601 T		VKDP 31601 T
1.1 (B571, C571), 1.2 (357F, 357G, 357J, 357L, 557F, 557G, 557J, 557L, B577, B57R, B57S, C577, C57R, C57S), 1.4 (557B, B573, B57P, C573)	05/90 → 09/98			○	VKDA 27013	
1.2 (357R, 557R, B57A, C57A)	05/90 → 09/98	~~ABS~~		○	VKDA 27013	
1.2 (5/357K, 5/357Y), 1.4 (B/C57T, B/C57Y, B57J, C57J), 1.7 (B/C574), 1.8 (B/C57C, B/C57U)	01/91 → 09/98	~~ABS~~		○	VKDA 27013	
1.4 (B57B, C57B)	01/91 → 09/98	~~ABS~~		○	VKDA 27013	
1.8 (357U, 557U)	01/91 → 09/98	~~ABS~~		○	VKDA 27013	
1.9 D (B576, B57L, C576, C57L)	01/91 → 09/98	~~ABS~~		○	VKDA 27013	
1.9 D (357N, 557N, 657H, 657M, 657N)	01/97 → 09/98	~~ABS~~		○	VKDA 27013	

RENAULT .../...

CLIO I

1.1 (S571), 1.2 (657K, S572, S577, S57A, S57R)	01/91 → 09/98	●		**VKDA 35600 T**		**VKDP 31601 T**
1.9 D (657H, 657M, 657N, S576, S57I, S57L)	01/91 → 09/98	●		**VKDA 35601 T**		**VKDP 31601 T**
CLIO I	01/91 → 09/98		○	**VKDA 27013**		

CLIO II

1.2 (BB0A, BB0F, BB10, BB1K, BB28, BB2D, BB2H, CB0A, CB0F, CB10, CB1K, CB2D, CB2H)	09/98 → 06/05	●		**VKDA 35607 T**		**VKDP 31601 T**
1.2 16V (BB05, BB0W, BB11, BB19, BB27, BB2T, BB2U, BB2V, CB05, CB0W, CB11, CB19, CB27, CB2T, CB2U, CB2V, LB11, LB19, LB1Y, LB27, LB2V), 1.4 (BB0C, BB0S, CB0C, CB0S)	09/98 → 06/05	●		**VKDA 35607 T**		**VKDP 31601 T**
1.4 16V (BB0L, BB0P, BB13, BB1L, CB0L, CB0P, CB13, CB1L, LB0K, LB0L, LB0P, LB2A, LB2B), 1.6 (BB00, BB0D, CB0D, LB00)	09/98 → 06/05	●		**VKDA 35607 T**		**VKDP 31601 T**
1.6 16V (BB01, BB0H, BB0T, BB14, BB1D, BB1J, BB1R, BB26, BB2K, BB3E, CB01, CB0H, CB0T, CB14, CB1D, CB26, CB3E, LB01, LB18, LB1B, LB1J, LB1R, LB1V, LB26, LB2K, LB3E, SB0H)	09/98 → 06/05	●		**VKDA 35607 T**		
1.5 dCi (BB07, BB08, BB1W, BB24, BB2G, CB07, CB08, CB1W, CB2G, LB07, LB1W, LB23, LB24, LB2E, SB07, SB08, SB09), 1.9 D (BB02, BB0E, BB0J, CB0E, CB0J, LB02)	09/98 → 06/05	●		**VKDA 35607 T**		**VKDP 31601 T**
1.9 dTi (BB0U, BB0V, BB2C, CB0U, CB0V, CB2C, SB0U)	09/98 → 06/05	●		**VKDA 35607 T**		**VKDP 31601 T**

CLIO II

CLIO II	09/98 → 06/05	●		**VKDA 35607 T**		**VKDP 31601 T**

CLIO III

CLIO III	06/05 → 02/06	●		***VKDA 35631 T***		—

ESPACE I

ESPACE I	07/84 → 12/90 IST	●		—		
QUADRA: ESPACE I	01/88 → 12/92 IST	●		—		

ESPACE II

2.0, 2.2, 2.8 V6	01/91 → 10/96	●		—		
2.1 TD	01/91 → 10/96	●		—		

QUADRA: 2.2 4x4 ... 03/91 → 12/96 ...				●		—		
ESPACE III								
ESPACE III ... 11/96 → 10/02 ...				●		**VKDA 35620 T**	**VKD 35001 T**	**VKDP 32601 T**
ESPACE IV								
ESPACE IV ... 11/02 → 06/05 ...				●		**VKDA 35626 T**		**VKDP 31609 T**
EXPRESS/EXTRA/RAPID								
EXPRESS/EXTRA/RAPID ... 07/85 → 08/98 ...				●		**VKDA 35602 T**	**VKD 35001 T**	VKDP 31606 T
1.2 (G40A) ... 09/91 → 03/98 ...			, HD		○	**VKDA 27010**		
1.4 (F40D, F40U, F40V) ... 09/91 → 03/98 ...			, HD		○	**VKDA 27010**		
1.6 D (F404), 1.9 D (F40E, F40N, F40P, F40R) ... 03/86 → 08/98 ...			, HD		○	**VKDA 27010**		
KANGOO								
1.2 (KC01, KC0A, KC0F, KC0K, KC1A, KC1H), 1.2 16V (KC03, KC05, KC06, KC0T, KC0W, KC1D, KC1K, KC1P), 1.4 (KC0B, KC0C, KC0H, KC0M), 1.6 16V (KC0L, KC0P, KC0R, KC0S, KC1B, KC1N) ... 03/98 → 06/05 ...				●		**VKDA 35607 T**		**VKDP 31601 T**
1.6 16V bivalent (KC0L, KC0P, KC0R, KC0S, KC1B, KC1N) ... 03/98 → 06/05 ...				●		**VKDA 35607 T**		**VKDP 31601 T**
1.5 dCi (KC07, KC08, KC09, KC1E, KC1F, KC1G, KC1R, KC1S), 1.9 dTi (KC0U), D 55 1.9 (KC0D), D 65 1.9 (KC02, KC0E, KC0J, KC0N) ... 03/98 → 06/05 ...				●		**VKDA 35607 T**		
1.5 dCi, 1.5 dCi (KC07, KC08, KC09), 1.9 dTi (KC0U), D 55 1.9 (KC0D), D 65 1.9 (KC02, KC0E, KC0J, KC0N) ... 03/98 → 10/05 ...				●				**VKDP 31601 T**
4X4: 1.6 16V (KC0L, KC0P, KC0R, KC0S, KC1B, KC1N) ... 10/01 → 06/05 ...				●		**VKDA 35607 T**		**VKDP 31601 T**
4X4: 1.9 dCi (KC0V) ... 10/01 → 06/05 ...				●		**VKDA 35607 T**		**VKDP 31601 T**
4X4: 1.9 dCi (KC0V) ... 10/03 → 06/05 ...				●		**VKDA 35607 T**		**VKDP 31601 T**
1.2 (KC0K), 1.2 16V (KC03, KC06) ... 03/98 → 06/05 ...					○	**VKDA 27009**		
1.2 (KC01) ... 03/98 → 06/05 ...			, HD		○	**VKDA 27009**		
1.2 (KC0A, KC0F) ... 03/98 → 06/05 ...			, 4)		○	**VKDA 27009**		
1.2 16V (KC05, KC0W) ... 06/01 → 06/05 ...			, HD		○	**VKDA 27009**		
1.2 16V (KC05, KC0W) ... 06/01 → 06/05 ...			, 4)		○	**VKDA 27009**		
1.2 16V (KC0T) ... 06/01 → 06/05 ...			, HD		○	**VKDA 27009**		
1.4 (KC0B, KC0C, KC0H, KC0M) ... 03/98 → 06/05 ...			, HD		○	**VKDA 27009**		
1.4 (KC0B, KC0C, KC0H, KC0M) ... 03/98 → 06/05 ...			, 4)		○	**VKDA 27009**		
1.5 dCi (KC07, KC08, KC09), 1.9 dTi (KC0U), D 65 1.9 (KC02, KC0E, KC0J, KC0N) ... 03/98 → 06/05 ...			, HD		○	**VKDA 27009**		

RENAULT .../...

1.5 dCi (KC07, KC08, KC09), 1.9 dTi (KC0U), D 55 1.9 (KC0D), D 65 1.9 (KC02, KC0E, KC0J, KC0N)	03/98 → 06/05	4)		○	**VKDA 27009**		
KANGOO							
1.2 (FC01, FC0A, FC0F, FC1A, FC1H), 1.2 16V (FC05, FC0T, FC0W, FC1D, FC1K, FC1P), 1.4 (FC0B, FC0C, FC0H, FC0M), 1.6 16V (FC0L, FC0P, FC0R, FC0S, FC1B, FC1M, FC1N)	03/98 → 06/05		●		**VKDA 35607 T**		**VKDP 31601 T**
1.5 dCi (FC07, FC08, FC09, FC1E, FC1F, FC1G, FC1R, FC1S), 1.9 dCi (FC0V), 1.9 dTi (FC0U), D 55 1.9 (FC0D), D 65 1.9 (FC02, FC0E, FC0J, FC0N)	03/98 → 06/05		●		**VKDA 35607 T**		
1.5 dCi, 1.5 dCi (FC07, FC08, FC09), 1.9 dCi, 1.9 dTi (FC0U), D 55 1.9 (FC0D), D 65 1.9 (FC02, FC0E, FC0J, FC0N)	03/98 → 10/05		●				**VKDP 31601 T**
4X4: 1.6 16V (FC0L, FC0P, FC0R, FC0S, FC1B, FC1M, FC1N)	10/01 → 06/05		●		**VKDA 35607 T**		**VKDP 31601 T**
4X4: 1.9 dCi (FC0V)	10/01 → 06/05		●		**VKDA 35607 T**		**VKDP 31601 T**
1.2 16V (FC05), 1.4 (FC0B, FC0C, FC0H, FC0M)	03/98 → 06/05	HD		○	**VKDA 27009**		
1.2 (FC01, FC0A, FC0F), 1.2 16V (FC05)	03/98 → 06/05	4)		○	**VKDA 27009**		
1.5 dCi (FC07), 1.9 dTi (FC0U), D 65 1.9 (FC02, FC0E, FC0J, FC0N)	03/98 → 06/05	HD		○	**VKDA 27009**		
1.5 dCi (FC07), 1.9 dTi (FC0U), D 55 1.9 (FC0D), D 65 1.9 (FC02, FC0E, FC0J, FC0N)	03/98 → 06/05	4)		○	**VKDA 27009**		
1.9 dCi (FC0V)	07/03 → 06/05	HD		○	**VKDA 27009**		
1.9 dCi (FC0V)	07/03 → 06/05	4)		○	**VKDA 27009**		
LAGUNA I							
LAGUNA I	11/93 → 03/01		●		**VKDA 35623 T**	**VKD 35001 T**	**VKDP 32601 T**
LAGUNA I							
LAGUNA I	09/95 → 03/01		●		**VKDA 35623 T**	**VKD 35001 T**	**VKDP 32601 T**
LAGUNA II							
1.6 16V (BG0A, BG0L, BG0U)	03/01 → 01/03	5), 6), 7), 8), 9)	●		**VKDA 35619 T**		**VKDP 31602 T**
1.6 16V (BG0A, BG0L, BG0U)	02/03 → 06/05		●		**VKDA 35619 T**		**VKDP 31602 T**

1.6 16V (BG1G, BG1H)	02/05 → 06/05 ...	●		VKDA 35626 T		
1.6 16V	02/05 → 10/05 ... 5), 6), 7), 8), 9)	●				VKDP 31602 T
1.8 16V (BG04, BG06, BG0C, BG0V)	03/01 → 01/03 ... 5), 6), 7), 8), 9)	●		VKDA 35619 T		VKDP 31602 T
1.8 16V (BG06, BG0B, BG0J, BG0M)	03/01 → 01/03 ... 5), 6), 7), 8), 9)	●		VKDA 35619 T		VKDP 31602 T
1.8 16V (BG04, BG06, BG0C, BG0V)	02/03 → 06/05 ...	●		VKDA 35619 T		VKDP 31602 T
1.8 16V (BG06, BG0B, BG0J, BG0M)	02/03 → 06/05 ...	●		VKDA 35619 T		VKDP 31602 T
2.0 16V (BG0P, BG0T, BG0Y), 2.0 16V IDE (BG0P), 2.0 16V Turbo (BG0Z), 3.0 V6 24V (BG1K)	03/01 → 06/05 ...	●		VKDA 35626 T		
2.0 16V IDE (BG0N)	04/01 → 01/03 ... 5), 6), 7), 8), 9)	●		VKDA 35619 T		VKDP 31602 T
2.0 16V (BG0K)	08/02 → 01/03 ... 5), 6), 7), 8), 9)	●		VKDA 35619 T		VKDP 31602 T
2.0 16V Turbo (BG0S)	01/03 → 01/03 ... 5), 6), 7), 8), 9)	●		VKDA 35619 T		VKDP 31602 T
2.0 16V (BG0K)	02/03 → 06/05 ...	●		VKDA 35619 T		VKDP 31602 T
2.0 16V IDE (BG0N)	02/03 → 06/05 ...	●		VKDA 35619 T		VKDP 31602 T
2.0 16V Turbo (BG0S)	02/03 → 06/05 ...	●		VKDA 35619 T		VKDP 31602 T
2.0 16V	01/05 → 10/05 ... 5), 6), 7), 8), 9)	●				VKDP 31602 T
3.0 V6 24V (BG02, BG0D)	03/01 → 01/03 ... 5), 6), 7), 8), 9)	●		VKDA 35619 T		VKDP 31602 T
3.0 V6 24V (BG02, BG0D)	02/03 → 06/05 ...	●		VKDA 35619 T		VKDP 31602 T
1.9 dCi (BG0G, BG0R)	03/01 → 01/03 ... 5), 6), 7), 8), 9)	●		VKDA 35619 T		VKDP 31602 T
1.9 dCI (BG08, BG0E)	06/01 → 01/03 ... 5), 6), 7), 8), 9)	●		VKDA 35619 T		VKDP 31602 T
1.9 dCI (BG08, BG0E)	02/03 → 06/05 ...	●		VKDA 35619 T		VKDP 31602 T
1.9 dCi (BG0G)	02/03 → 04/05 ...	●		VKDA 35619 T		VKDP 31602 T
1.9 dCi (BG0R)	02/03 → 06/05 ...	●		VKDA 35619 T		VKDP 31602 T
1.9 dCi (BG05, BG1A, BG1V, BG1W)	03/04 → 06/05 ...	●		VKDA 35626 T		
1.9 dCi	03/04 → 10/05 ... 5), 6), 7), 8), 9)	●				VKDP 31602 T
1.9 dCi (BG0G)	05/05 → 06/05 ...	●		VKDA 35626 T		
2.2 dCi (BG09, BG0F)	10/01 → 01/03 ... 5), 6), 7), 8), 9)	●		VKDA 35619 T		VKDP 31602 T
2.2 dCi (BG09, BG0F)	02/03 → 04/05 ...	●		VKDA 35619 T		VKDP 31602 T
2.2 dCi (BG09, BG0F)	05/05 → 06/05 ...	●		VKDA 35626 T		
2.2 dCi	05/05 → 10/05 ... 5), 6), 7), 8), 9)	●				VKDP 31602 T

LAGUNA II

1.6 16V (KG0A, KG0L, KG0U)	03/01 → 01/03 ... 5), 6), 7), 8), 9)	●		VKDA 35619 T		VKDP 31602 T
1.6 16V (KG0A, KG0L, KG0U)	02/03 → 06/05 ...	●		VKDA 35619 T		VKDP 31602 T
1.6 16V (KG1G, KG1H)	02/05 → 06/05 ...	●		VKDA 35626 T		
1.6 16V	02/05 → 10/05 ... 5), 6), 7), 8), 9)	●				VKDP 31602 T
1.8 16V (KG04, KG06, KG0C, KG0V)	03/01 → 01/03 ... 5), 6), 7), 8), 9)	●		VKDA 35619 T		VKDP 31602 T
1.8 16V (KG0B, KG0J, KG0M)	03/01 → 01/03 ... 5), 6), 7), 8), 9)	●		VKDA 35619 T		VKDP 31602 T
1.8 16V (KG04, KG06, KG0C, KG0V)	02/03 → 06/05 ...	●		VKDA 35619 T		VKDP 31602 T
1.8 16V (KG0B, KG0J, KG0M)	02/03 → 06/05 ...	●		VKDA 35619 T		VKDP 31602 T
2.0 16V (KG0P, KG0T, KG0Y), 2.0 16V IDE (KG0P), 2.0 16V Turbo (KG0Z), 3.0 V6 24V (KG1G)	03/01 → 06/05 ...	●		VKDA 35626 T		
2.0 16V IDE (KG0N)	04/01 → 01/03 ... 5), 6), 7), 8), 9)	●		VKDA 35619 T		VKDP 31602 T
2.0 16V (KG0K)	08/02 → 01/03 ... 5), 6), 7), 8), 9)	●		VKDA 35619 T		VKDP 31602 T
2.0 16V Turbo (KG0S)	01/03 → 01/03 ... 5), 6), 7), 8), 9)	●		VKDA 35619 T		VKDP 31602 T
2.0 16V (KG0K)	02/03 → 06/05 ...	●		VKDA 35619 T		VKDP 31602 T
2.0 16V IDE (KG0N)	02/03 → 06/05 ...	●		VKDA 35619 T		VKDP 31602 T
2.0 16V Turbo (KG0S)	02/03 → 06/05 ...	●		VKDA 35619 T		VKDP 31602 T
2.0 16V	01/05 → 10/05 ... 5), 6), 7), 8), 9)	●				VKDP 31602 T
3.0 V6 24V (KG02, KG0D)	03/01 → 01/03 ... 5), 6), 7), 8), 9)	●		VKDA 35619 T		VKDP 31602 T
3.0 V6 24V (KG02, KG0D)	02/03 → 06/05 ...	●		VKDA 35619 T		VKDP 31602 T
1.9 dCi (KG05, KG1A, KG1V, KG1W)	03/01 → 06/05 ...	●		VKDA 35626 T		

RENAULT .../...

1.9 dCi (KG0G, KG0R)	03/01 → 01/03	5), 6), 7), 8), 9)	●		**VKDA 35619 T**		**VKDP 31602 T**
1.9 dCi	03/01 → 10/05	5), 6), 7), 8), 9)	●				**VKDP 31602 T**
1.9 dCI (KG08, KG0E)	06/01 → 01/03	5), 6), 7), 8), 9)	●		**VKDA 35619 T**		**VKDP 31602 T**
1.9 dCI (KG08, KG0E)	02/03 → 06/05		●		**VKDA 35619 T**		**VKDP 31602 T**
1.9 dCi (KG0G)	02/03 → 04/05		●		**VKDA 35619 T**		**VKDP 31602 T**
1.9 dCi (KG0R)	02/03 → 06/05		●		**VKDA 35619 T**		**VKDP 31602 T**
1.9 dCi (KG0G)	05/05 → 06/05		●		**VKDA 35626 T**		
2.2 dCi (KG09, KG0F)	10/01 → 01/03	5), 6), 7), 8), 9)	●		**VKDA 35619 T**		**VKDP 31602 T**
2.2 dCi (KG09, KG0F)	02/03 → 04/05		●		**VKDA 35619 T**		**VKDP 31602 T**
2.2 dCi (KG09, KG0F)	05/05 → 06/05		●		**VKDA 35626 T**		
2.2 dCi	05/05 → 10/05	5), 6), 7), 8), 9)	●				**VKDP 31602 T**

MEGANE I

1.4 16V (BA0W), 1.4 e (BA0E, BA0V), 1.4 Eco (BA0T), 1.6 16V (BA00, BA01J, BA04, BA0B, BA11, BA1K), 1.6 e (BA0F, BA0S, BA1C), 1.6 i (BA0L), 1.8 16V (BA12, BA1A, BA1M, BA1R)	01/96 → 06/04		●		**VKDA 35615 T**	**VKD 35001 T**	**VKDP 32600 T**
1.8 16V (BA06)	01/01 → 06/04		●		—	**VKD 35001 T**	**VKDP 32600 T**
2.0 i (BA07, BA0G)	01/96 → 06/04		●		**VKDA 35615 T**	**VKD 35001 T**	**VKDP 32600 T**
2.0 16V (BA0H)	07/96 → 06/04		●		—	**VKD 35001 T**	
1.9 D Eco (B/SA0U, BA0A), 1.9 dCi (BA01, BA05, BA1F, SA01, SA05, SA0N, SA1U), 1.9 dT (BA09, BA0K, BA0R, BA0Y, SA09, SA0A, SA0K, SA0R, SA0Y), 1.9 dTi (BA08, BA0N)	01/96 → 06/04		●		**VKDA 35615 T**	**VKD 35001 T**	**VKDP 32600 T**
1.9 dTi (BA1U)	02/01 → 06/04		●		—	**VKD 35001 T**	**VKDP 32600 T**
1.4 Eco (BA0T), 1.6 e (BA0F, BA0S), 1.6 i (BA0L)	01/96 → 03/99			○	**VKDA 27009**		
1.4 e (BA0E)	01/96 → 06/04			○	**VKDA 27009**		
1.4 e (BA0V)	01/96 → 02/99			○	**VKDA 27009**		
1.4 16V (BA0W)	03/99 → 06/04	HD		○	**VKDA 27009**		
1.6 16V (BA04)	03/99 → 06/04	HD		○	**VKDA 27009**		
2.0 i (BA0G)	01/96 → 06/04	HD		○	**VKDA 27009**		
1.9 D Eco (B/SA0U, BA0A)	01/96 → 06/04			○	**VKDA 27009**		

MEGANE I

1.4 (LA0E, LA0V), 1.4 16V (LA0D, LA0W, LA10)	09/96 → 06/04		●		**VKDA 35615 T**	**VKD 35001 T**	**VKDP 32600 T**
1.4 16V (LA1H)	03/99 → 06/04		●		—	**VKD 35001 T**	**VKDP 32600 T**
1.6 16V (LA00, LA04, LA0B, LA11, LA1C, LA1K), 1.6 e (LA0F, LA0S), 1.6 i (LA0L)	09/96 → 06/04		●		**VKDA 35615 T**	**VKD 35001 T**	**VKDP 32600 T**
1.6 16V (LA1J)	03/99 → 06/04		●		—	**VKD 35001 T**	**VKDP 32600 T**
1.8 16V (LA06, LA1R)	01/01 → 06/04		●		—	**VKD 35001 T**	**VKDP 32600 T**
1.8 16V (LA12, LA1A, LA1M)	01/01 → 06/04		●		**VKDA 35615 T**	**VKD 35001 T**	**VKDP 32600 T**
2.0 i (LA07, LA0G)	09/96 → 06/04		●		**VKDA 35615 T**	**VKD 35001 T**	**VKDP 32600 T**
1.9 D (LA0A, LA0R, LA0U), 1.9 dCi (LA01, LA05, LA1F), 1.9 dT (LA0K, LA0Y), 1.9 dTi (LA08, LA0N, LA1U)	09/96 → 06/04		●		**VKDA 35615 T**	**VKD 35001 T**	**VKDP 32600 T**
1.4 (LA0E, LA0V)	09/96 → 06/04	HD		○	**VKDA 27009**		
1.4 16V (LA0W)	03/99 → 06/04	HD		○	**VKDA 27009**		
1.6 e (LA0F)	09/96 → 03/99	HD		○	**VKDA 27009**		

1.6 e (LA0S)	09/96 → 03/99			○	VKDA 27009		
1.6 16V (LA04)	03/99 → 06/04	HD		○	VKDA 27009		
1.6 16V (LA1C)	03/99 → 06/04			○	VKDA 27009		
2.0 i (LA07)	09/96 → 06/04			○	VKDA 27009		
2.0 i (LA0G)	09/96 → 06/04	HD		○	VKDA 27009		
1.9 D (LA0A)	09/96 → 06/04	HD		○	VKDA 27009		
1.9 dTi (LA0N)	03/97 → 02/01	HD		○	VKDA 27009		
MEGANE I							
1.4 16V (EA0D, EA0W, EA10, EA1H), 1.6 16V (EA04, EA0B, EA11, EA1J), 1.6 e (EA0F), 2.0 (EA0G), 2.0 i (EA0G)	10/96 → 06/04			●	VKDA 35615 T	VKD 35001 T	VKDP 32600 T
2.0 16V (EA0H), 2.0 16V IDE (EA03, EA0P, EA14)	10/96 → 06/04			●	—	VKD 35001 T	
MEGANE I							
1.4 16V (DA0D, DA0W, DA10, DA1H), 1.6 16V (DA00, DA04, DA0B, DA11, DA1J), 1.6 e (DA0F), 2.0 i (DA0G)	03/96 → 06/04			●	VKDA 35615 T	VKD 35001 T	VKDP 32600 T
2.0 16V (DA0H), 2.0 16V IDE (DA03, DA0P, DA14)	03/96 → 06/04			●	—	VKD 35001 T	
1.9 dCi (DA05, DA1F), 1.9 dTi (DA0N)	03/97 → 06/04			●	VKDA 35615 T	VKD 35001 T	VKDP 32600 T
MEGANE I							
1.4 16V (KA0D, KA0W, KA10), 1.4 e (KA0V)	03/99 → 06/04			●	VKDA 35615 T	VKD 35001 T	VKDP 32600 T
1.4 16V (KA1H)	03/99 → 06/04			●	—	VKD 35001 T	VKDP 32600 T
1.6 16V (KA04, KA0B, KA11), 1.6 e (KA0F)	03/99 → 06/04			●	VKDA 35615 T	VKD 35001 T	VKDP 32600 T
1.6 16V (KA1J)	03/99 → 06/04			●	—	VKD 35001 T	VKDP 32600 T
1.8 16V (KA0S, KA1R)	01/01 → 06/04			●	—	VKD 35001 T	VKDP 32600 T
1.8 16V (KA12, KA1A, KA1M)	01/01 → 06/04			●	VKDA 35615 T	VKD 35001 T	VKDP 32600 T
1.9 D (KA0J), 1.9 dCi (KA01, KA05, KA1F), 1.9 dTi (KA0N, KA1U)	03/99 → 06/04			●	VKDA 35615 T	VKD 35001 T	VKDP 32600 T
1.9 D (KA0R)	04/99 → 06/04			●	—	VKD 35001 T	VKDP 32600 T
MEGANE I Scenic							
MEGANE I Scenic	01/97 → 09/99			●	VKDA 35615 T	VKD 35001 T	VKDP 32600 T
MEGANE II							
1.4 16V (BM08, BM0B, BM0H, BM1A, CM08, CM0B, CM0H, CM1A), 1.6 16V (BM0C, BM0J, BM0Y, BM1B, CM0C, CM0J, CM0Y, CM1B), 2.0 16V (BM05, BM0U, BM1M, BM1N, CM05, CM0U, CM1M, CM1N), 2.0 16V Turbo (BM0W, CM0W)	11/02 → 06/05			●	VKDA 35625 T		

RENAULT .../...								
1.4 16V, 1.4 16V (BM0B, CM0B), 1.6 16V (BM0C, CM0C), 2.0 16V (BM0U, CM0U), 2.0 16V Turbo		11/02 → 10/05		●				**VKDP 31603 T**
1.5 dCi (BM02, BM0F, BM0T, BM13, CM02, CM0F, GM02, GM0F, SM02, SM0F), 1.9 dCi (BM00, BM0G, BM0L, BM1D, BM1G, CM00, CM0G, CM0L, CM1D, CM1G)		11/02 → 06/05		●		**VKDA 35625 T**		
1.5 dCi, 1.5 dCi (BM0F, CM0F), 1.9 dCi, 1.9 dCi (BM0G, CM0G)		11/02 → 10/05		●				**VKDP 31603 T**
MEGANE II CC								
1.6 (EM0C, EM0J, EM1B), 2.0 (EM05, EM0U, EM1M, EM1N), 2.0 16V Turbo (EM0W)		09/03 → 06/05		●		**VKDA 35625 T**		**VKDP 31603 T**
1.9 dCi (EM0G, EM1D, EM1G)		09/03 → 06/05		●		**VKDA 35625 T**		**VKDP 31603 T**
MEGANE II								
MEGANE II		09/03 → 06/05		●		**VKDA 35625 T**		**VKDP 31603 T**
MEGANE II								
MEGANE II		09/03 → 06/05		●		**VKDA 35625 T**		**VKDP 31603 T**
MODUS								
MODUS		12/04 → 02/06		●		***VKDA 35631 T***		—
R11								
R11		03/83 → 12/88		●		—	**VKD 35001 T**	**VKDP 32600 T**
1.2, 1.4, 1.4 Turbo, 1.7		06/87 → 12/88			○	**VKDA 27009**		
1.6 D		06/87 → 12/88			○	**VKDA 27009**		
R19 I								
1.2 (B530, B53W, C530, C53W)		01/88 → 12/92		●		**VKDA 35616 T**	**VKD 35001 T**	**VKDP 32600 T**
1.4 (B/C532) CAT, 1.4 (B531, C531)		01/88 → 12/92		●		**VKDA 35616 T**	**VKD 35001 T**	**VKDP 32600 T**
1.4 (B/C53P), 1.4 (B537, B53A, B53G, B53H, C537, C53A)		01/88 → 12/92		●		**VKDA 35615 T**	**VKD 35001 T**	**VKDP 32600 T**
1.7 (B533, B536, B53B, B53E, B53F, B53M, C533, C536, C53B, C53E, C53F, C53M)		09/88 → 04/92		●		**VKDA 35615 T**	**VKD 35001 T**	**VKDP 32600 T**
1.8 16V (B539, B53D, C539, C53D)		06/89 → 04/92		●		—	**VKD 35001 T**	
1.9 D (B534, B53I, B53J, B53K, B53T, B53Z, C534, C53I, C53J, C53K, C53T, C53Z)		09/88 → 04/92		●		**VKDA 35615 T**	**VKD 35001 T**	**VKDP 32600 T**

1.2 (B530, B53W, C530, C53W), 1.4 (B/C532, B/C53P) CAT, 1.4 (B531, B537, B53G, B53H, C531, C537), 1.7 (B533, B536, B53E, C533, C53E)	01/88 → 12/92		○	VKDA 27009		
1.4 (B53A, C53A)	01/88 → 12/92	ABS	○	VKDA 27009		
1.7 (B53B, C53B)	09/88 → 04/92	ABS	○	VKDA 27009		
1.9 D (B534, B53I, B53J, C534, C53I, C53J)	09/88 → 04/92	ABS	○	VKDA 27009		
R19 I						
1.2 (S530)	01/88 → 12/92		●	VKDA 35616 T	VKD 35001 T	VKDP 32600 T
1.4 (S537)	01/88 → 12/92		●	VKDA 35615 T	VKD 35001 T	VKDP 32600 T
1.9 D (S534, S53I, S53J, S53K)	01/88 → 12/92		●	VKDA 35615 T	VKD 35001 T	VKDP 32600 T
R19 I	01/88 → 12/92		○	VKDA 27009		
R19 I						
1.7 (D53C)	07/91 → 04/92		●	VKDA 35615 T	VKD 35001 T	VKDP 32600 T
1.8 16V (D53D)	07/91 → 04/92		●	—	VKD 35001 T	
R19 I						
1.2 (L530, L53W)	01/88 → 12/92		●	VKDA 35616 T	VKD 35001 T	VKDP 32600 T
1.4 (L531, L532)	07/88 → 04/92		●	VKDA 35616 T	VKD 35001 T	VKDP 32600 T
1.4 (L535, L537, L53A, L53G, L53H, L53P)	07/88 → 04/92		●	VKDA 35615 T	VKD 35001 T	VKDP 32600 T
1.7 (L53B, L53C), 1.7 (L53F)	07/88 → 12/92		●	VKDA 35615 T	VKD 35001 T	VKDP 32600 T
1.8 16V (L539, L53D)	10/89 → 04/92		●	—	VKD 35001 T	
1.9 D (L534, L53I, L53J, L53K, L53T, L53Z)	10/89 → 04/92		●	VKDA 35615 T	VKD 35001 T	VKDP 32600 T
1.2 (L530, L53W), 1.4 (L531, L532, L537, L53G, L53H, L53P)	01/88 → 12/92		○	VKDA 27009		
1.4 (L535, L53A)	07/88 → 04/92	ABS	○	VKDA 27009		
1.7 (L53B)	10/89 → 04/92	ABS	○	VKDA 27009		
1.9 D (L534, L53I, L53J)	10/89 → 04/92	ABS	○	VKDA 27009		
R19 II						
1.2 (B530, B53W, C530, C53W)	04/92 → 12/95		●	VKDA 35616 T	VKD 35001 T	VKDP 32600 T
1.4 (B/C532), 1.4 (B531, C531)	01/92 → 12/95		●	VKDA 35616 T	VKD 35001 T	VKDP 32600 T
1.4 (B/C535), 1.4 (B537, B53A, B53G, B53H, C537, C53A)	01/92 → 12/95		●	VKDA 35615 T	VKD 35001 T	VKDP 32600 T
1.7 (B533, B536, B53B, B53E, B53F, B53M, C533, C536, C53B, C53E, C53F, C53M), 1.8 (353A, 353C, 353D, 353F, 553A, 553C, 553D, 553F, 553H, B538, B53V, B53Y, C538, C53V, C53Y)	04/92 → 12/95		●	VKDA 35615 T	VKD 35001 T	VKDP 32600 T
1.8 16V (B539, B53D, C539, C53D)	04/92 → 12/95		●	—	VKD 35001 T	

RENAULT .../...

1.9 D (B534, B53I, B53J, B53K, B53T, B53Z, C534, C53I, C53J, C53K, C53T, C53Z), 1.9 dT (B534, B53I, B53J, B53K, B53T, B53Z, C534, C53I, C53J, C53K, C53T, C53Z)	04/92 → 12/95	●		VKDA 35615 T	VKD 35001 T	VKDP 32600 T
1.2 (B530, B53W, C530, C53W), 1.4 (B/C532), 1.4 (B531, B537, B53G, B53H, C531, C537), 1.7 (B533, B536, B53E, C533, C53E), 1.8 (453H, 553H)	01/92 → 12/95		○	VKDA 27009		
1.4 (B53A, C53A)	01/92 → 12/95		○	VKDA 27009		
1.4 (B/C535)	01/92 → 12/95		○	VKDA 27009		
1.7 (B53B, C53B)	04/92 → 12/95		○	VKDA 27009		
1.9 D (B534, B53I, B53J, C534, C53I, C53J), 1.9 dT (B534, B53I, B53J, C534, C53I, C53J)	04/92 → 12/95		○	VKDA 27009		
1.9 D (L534, L53I, L53J)	04/92 → 12/95		○	VKDA 27009		
R19 II						
1.2 (S530)	03/92 → 12/95	●		VKDA 35616 T	VKD 35001 T	VKDP 32600 T
1.4 (S537)	03/92 → 12/95	●		VKDA 35615 T	VKD 35001 T	VKDP 32600 T
1.9 D (S534, S53I, S53J, S53K), 1.9 dT (S534, S53I, S53J, S53K)	03/92 → 12/95	●		VKDA 35615 T	VKD 35001 T	VKDP 32600 T
R19 II	03/92 → 12/95		○	VKDA 27009		
R19 II						
1.7 (D53C), 1.8 (853A, 853F, D53V, D53Y)	04/92 → 06/96	●		VKDA 35615 T	VKD 35001 T	VKDP 32600 T
1.8 (853C), 1.8 16V (D53D)	04/92 → 06/96	●		—	VKD 35001 T	
R19 II						
1.4 (L531, L532)	04/92 → 12/95	●		VKDA 35616 T	VKD 35001 T	VKDP 32600 T
1.4 (L535, L537, L53A, L53G, L53H, L53P)	04/92 → 12/95	●		VKDA 35615 T	VKD 35001 T	VKDP 32600 T
1.7 (L53B), 1.8 (453A, 453C, 453D, 453F, 453H, L538, L53V, L53Y)	04/92 → 12/95	●		VKDA 35615 T	VKD 35001 T	VKDP 32600 T
1.8 16V (L539, L53D)	04/92 → 12/95	●		—	VKD 35001 T	
1.9 D (B534, B53I, B53J, B53K, B53T, B53Z, C534, C53I, C53J, C53K, C53T, C53Z, L53J), 1.9 dT (B534, B53I, B53J, B53K, B53T, B53Z, C534, C53I, C53J, C53K, C53T, C53Z)	04/92 → 12/95	●		VKDA 35615 T	VKD 35001 T	VKDP 32600 T
1.4 (L531, L532, L537, L53G, L53H, L53P)	04/92 → 12/95		○	VKDA 27009		
1.4 (L535, L53A)	04/92 → 12/95		○	VKDA 27009		
1.7 (L53B)	04/92 → 12/95		○	VKDA 27009		
1.8 (453H)	04/92 → 12/95		○	VKDA 27009		
1.9 D (L534, L53I, L53J), 1.9 dT (L534, L53I, L53J)	04/92 → 12/95		○	VKDA 27009		
1.9 D (L53J)	04/92 → 12/95		○	VKDA 27009		

R21						
1.7 (B482, B48E, B48F)	09/89 → 06/94	●		**VKDA 35603 T**	**VKD 35001 T**	VKDP 32602 T
2.0 (B483, B48Y),						
2.2 (B48K)	09/89 → 06/94	●		**VKDA 35604 T**	**VKD 35001 T**	VKDP 32602 T
2.0 (B48C)	09/89 → 12/93	●		**VKDA 35603 T**	**VKD 35001 T**	VKDP 32602 T
2.0 (B48C)	09/89 → 12/93	●		**VKDA 35604 T**	**VKD 35001 T**	VKDP 32602 T
2.0 (B48R)	02/90 → 10/92	●		**VKDA 35603 T**	**VKD 35001 T**	VKDP 32602 T
2.0 (B48R)	02/90 → 10/92	●		**VKDA 35604 T**	**VKD 35001 T**	VKDP 32602 T
1.9 D (B48H, B48I)	09/89 → 10/93	●		**VKDA 35603 T**	**VKD 35001 T**	VKDP 32602 T
2.1 D (B480),						
2.1 Turbo-D (B486, B487,						
B488, B48P, B48W)	09/89 → 06/94	●		**VKDA 35604 T**	**VKD 35001 T**	VKDP 32602 T
2.1 D (B480, B48V)	09/89 → 12/92	●		**VKDA 35603 T**	**VKD 35001 T**	VKDP 32602 T
2.1 D (B480, B48V)	09/89 → 12/92	●		**VKDA 35604 T**	**VKD 35001 T**	VKDP 32602 T
2.1 Turbo-D (B48V)	09/89 → 06/94	●		**VKDA 35603 T**	**VKD 35001 T**	VKDP 32602 T
2.1 Turbo-D (B48V)	09/89 → 06/94	●		**VKDA 35604 T**	**VKD 35001 T**	VKDP 32602 T
4X4: R21	07/90 → 06/94	●		**VKDA 35604 T**	**VKD 35001 T**	VKDP 32602 T
4X4: 2.0 (B48R)	09/90 → 10/92	●		**VKDA 35603 T**	**VKD 35001 T**	VKDP 32602 T
4X4: 2.0 (B48R)	09/90 → 10/92	●		**VKDA 35604 T**	**VKD 35001 T**	VKDP 32602 T
R21						
R21	06/86 → 04/95	●				VKDP 32602 T
R21						
1.7 (K48F, K48N) CA, K48E,						
K484, K48M), 2.0 (K483)	06/86 → 12/93	●		**VKDA 35603 T**	**VKD 35001 T**	VKDP 32602 T
1.7 (K/S481, K/S482)	01/87 → 03/93	●		**VKDA 35603 T**	**VKD 35001 T**	VKDP 32602 T
2.0 (K48C)	03/86 → 12/93	●		**VKDA 35603 T**	**VKD 35001 T**	VKDP 32602 T
2.0 (K48C)	03/86 → 12/93	●		**VKDA 35604 T**	**VKD 35001 T**	VKDP 32602 T
2.0 (K489, K48R)	06/90 → 02/94	●		**VKDA 35604 T**	**VKD 35001 T**	VKDP 32602 T
2.2 (K48K)	06/86 → 04/89	●		**VKDA 35603 T**	**VKD 35001 T**	VKDP 32602 T
2.2 (K48K)	05/89 → 11/93	●		**VKDA 35603 T**	**VKD 35001 T**	VKDP 32602 T
2.2 (K48K)	05/89 → 11/93	●		**VKDA 35604 T**	**VKD 35001 T**	VKDP 32602 T
2.1 D (K486)	10/86 → 04/89	●		**VKDA 35603 T**	**VKD 35001 T**	VKDP 32602 T
2.1 D (S486)	10/86 → 09/90	●		**VKDA 35603 T**	**VKD 35001 T**	VKDP 32602 T
2.1 D (K480),						
2.1 Turbo-D (K487, K48A,						
K48P, K48W)	10/86 → 09/95	●		**VKDA 35604 T**	**VKD 35001 T**	VKDP 32602 T
2.1 D (K486)	10/86 → 05/89	●		**VKDA 35603 T**	**VKD 35001 T**	VKDP 32602 T
2.1 Turbo-D (K488)	10/86 → 04/89	●		**VKDA 35603 T**	**VKD 35001 T**	VKDP 32602 T
2.1 D (K486)	05/89 → 09/90	●		**VKDA 35604 T**	**VKD 35001 T**	VKDP 32602 T
2.1 Turbo-D (K488)	05/89 → 11/93	●		**VKDA 35604 T**	**VKD 35001 T**	VKDP 32602 T
2.1 D (K/S480, K/S48V)	08/89 → 12/92	●		**VKDA 35603 T**	**VKD 35001 T**	VKDP 32602 T
2.1 D (K/S480, K/S48V)	08/89 → 12/92	●		**VKDA 35604 T**	**VKD 35001 T**	VKDP 32602 T
4X4: 2.2 (K48K)	06/86 → 04/89	●		**VKDA 35603 T**	**VKD 35001 T**	
4X4: 2.2 (K48K)	05/89 → 12/93	●		**VKDA 35603 T**	**VKD 35001 T**	
4X4: 2.2 (K48K)	05/89 → 12/93	●		**VKDA 35604 T**	**VKD 35001 T**	
4X4: 2.1 D (K486)	10/88 → 04/89	●		**VKDA 35603 T**	**VKD 35001 T**	
4X4: 2.1 D (K486)	05/89 → 05/92	●		**VKDA 35603 T**	**VKD 35001 T**	
4X4: 2.1 D (K486)	05/89 → 05/92	●		**VKDA 35604 T**	**VKD 35001 T**	
R21						
1.4 (L48D), 1.7 (L481,						
L482, L484, L48E, L48M,						
L48N), 2.0 (L483)	03/86 → 02/94	●		**VKDA 35603 T**	**VKD 35001 T**	VKDP 32602 T
2.0 (L48C, L48R)	03/86 → 06/94	●		**VKDA 35603 T**	**VKD 35001 T**	VKDP 32602 T
2.0 (L489)	03/86 → 04/89	●		**VKDA 35603 T**	**VKD 35001 T**	VKDP 32602 T
2.0 (L48C, L48R)	03/86 → 06/94	●		**VKDA 35604 T**	**VKD 35001 T**	VKDP 32602 T
2.0 Turbo (L485, L48L)	04/87 → 10/92	●		**VKDA 35605 T**	**VKD 35001 T**	VKDP 32602 T
2.0 (L489)	05/89 → 10/93	●		**VKDA 35604 T**	**VKD 35001 T**	VKDP 32602 T
2.0 (L48Q, L48Y)	05/91 → 10/93	●		**VKDA 35604 T**	**VKD 35001 T**	VKDP 32602 T
2.2 (L48K)	07/86 → 04/89	●		**VKDA 35603 T**	**VKD 35001 T**	VKDP 32602 T
2.2 (L48K)	05/89 → 02/94	●		**VKDA 35603 T**	**VKD 35001 T**	VKDP 32602 T
2.2 (L48K)	05/89 → 02/94	●		**VKDA 35604 T**	**VKD 35001 T**	VKDP 32602 T

RENAULT .../...

1.9 D (L48H, L48I)	08/89 → 10/93	●		**VKDA 35603 T**	**VKD 35001 T**	VKDP 32602 T
2.1 D (L486), 2.1 Turbo-D (L488)	03/86 → 04/89	●		**VKDA 35603 T**	**VKD 35001 T**	VKDP 32602 T
2.1 D (L480), 2.1 Turbo-D (L487, L48A, L48P, L48W)	03/86 → 06/94	●		**VKDA 35604 T**	**VKD 35001 T**	VKDP 32602 T
2.1 Turbo-D (L488)	05/89 → 06/94	●		**VKDA 35603 T**	**VKD 35001 T**	VKDP 32602 T
2.1 Turbo-D (L488)	05/89 → 06/94	●		**VKDA 35604 T**	**VKD 35001 T**	VKDP 32602 T
2.1 D (L486)	05/89 → 12/89	●		**VKDA 35603 T**	**VKD 35001 T**	VKDP 32602 T
2.1 D (L486, L480, L48V)	05/89 → 06/94	●		**VKDA 35604 T**	**VKD 35001 T**	VKDP 32602 T
4X4: 2.0 Turbo (L485)	08/89 → 10/93	●		**VKDA 35605 T**	**VKD 35001 T**	VKDP 32602 T
4X4: 2.0 (L48R), 2.2 (L48K)	12/89 → 02/94	●		**VKDA 35603 T**	**VKD 35001 T**	VKDP 32602 T
4X4: 2.0 (L48R), 2.2 (L48K)	12/89 → 02/94	●		**VKDA 35604 T**	**VKD 35001 T**	VKDP 32602 T
4X4: 2.0 Turbo (L48L)	02/90 → 10/92	●		**VKDA 35605 T**	**VKD 35001 T**	VKDP 32602 T
R9						
R9	09/81 → 12/89	●		—	**VKD 35001 T**	**VKDP 32600 T**
1.2, 1.4, 1.4 Turbo, 1.7	06/87 → 12/89		○	**VKDA 27009**		
1.6 D	06/87 → 12/88		○	**VKDA 27009**		
SAFRANE						
SAFRANE	04/92 → 12/00 AAS	●		—	**VKD 35001 T**	
4X4: SAFRANE	12/92 → 07/96 AAS	●		—	**VKD 35001 T**	
SCENIC I						
1.4 16V (JA0D, Ja0W, JA10, JA1H), 1.6 16V (JA04, JA0B, JA11), 1.8 16V (JA12, JA1A, JA1M, JA1R), 2.0 16V (JA1B, JA1D), 2.0 16V IDE	09/99 → 06/04 FWD	●		**VKDA 35615 T**	**VKD 35001 T**	**VKDP 32600 T**
1.9 dCi (JA05, JA1F), 1.9 dTi (JA0N, JA1U)	09/99 → 06/04 FWD	●		**VKDA 35615 T**	**VKD 35001 T**	**VKDP 32600 T**
RX4: 2.0 16V	06/00 → 06/04	●		—	**VKD 35001 T**	
RX4: 1.9 dCi	11/00 → 06/04	●		—	**VKD 35001 T**	
SCENIC II						
1.4 (JM0B, JM0H, JM1A), 1.6 (JM0C, JM0J, JM0Y, JM1B), 2.0 (JM05, JM0U, JM1M, JM1N), 2.0 16V Turbo (JM0W)	06/03 → 06/05	●		**VKDA 35625 T**		
1.5 dCi (JM02, JM0F, JM0T, JM13), 1.9 dCi (JM0G, JM0L, JM12, JM1D, JM1G)	06/03 → 06/05	●		**VKDA 35625 T**		
SCENIC II	06/03 → 10/05	●				**VKDP 31603 T**
GRAND SCENIC						
GRAND SCENIC	04/04 → 06/05	●		**VKDA 35625 T**		—
SUPER 5						
SUPER 5	10/84 → 12/96	●		**VKDA 35602 T**	**VKD 35001 T**	VKDP 31606 T
SUPER 5	01/87 → 12/96		○	**VKDA 27013**		

SUPER 5							
SUPER 5	10/84 → 12/96		●		**VKDA 35602 T**	**VKD 35001 T**	VKDP 31606 T
1.0, 1.1, 1.2, 1.4, 1.7	01/87 → 12/96			○	**VKDA 27013**		
1.4	01/87 → 06/88	10), 11)		○	**VKDA 27013**		
1.6 D	01/87 → 12/96			○	**VKDA 27013**		
TWINGO							
TWINGO	03/93 → 06/05		●		**VKDA 35600 T**		**VKDP 31600 T**
TWINGO	03/93 → 06/05			○	**VKDA 40600 T**		**VKDP 41600 T**
TWINGO							
TWINGO	03/93 → 06/05		●		**VKDA 35600 T**		**VKDP 31600 T**
TWINGO	03/93 → 06/05			○	**VKDA 40600 T**		**VKDP 41600 T**
VEL SATIS							
VEL SATIS	06/02 → 05/06		●		**VKDA 35626 T**		**VKDP 31609 T**
RENAULT							
MASTER I							
28-35 2.0, 30 2, 2	08/80 → 07/98		●		—		
28-35 2.1 D	08/80 → 07/98		●		—		
28-35 2.4 D, 28-35 2, 5 D, 28-35 2, 5 TD, 28-35 2.5 D, 35 2, 5 TD	08/80 → 07/98		●		—		
MASTER II							
MASTER II	07/98 → 06/04	IST	●		—		
TRAFIC I							
1.4, 1.6, 1.7, 2.0, 2.2	03/80 → 10/97		●		—		
1.4	05/89 → 06/91		●				VKDP____
1.7, 2.0	05/89 → 08/94		●				VKDP____
2.2	05/89 → 10/97		●				VKDP____
1.9 D, 2.1 D, 2.5 D	03/80 → 03/01		●		—		
1.9 D	06/97 → 03/01		●				VKDP____
2.1 D, 2.5 D	05/89 → 03/01		●				VKDP____
4X4: 1.6, 2.0, 2.2	03/80 → 10/97		●		—		
4X4: 2.1 D, 2.5 D	11/86 → 03/01		●		—		
TRAFIC II							
TRAFIC II	03/01 → 06/04		●		**VKDA 35622 T**		
ROVER							
200 (RF)							
211	01/98 → 03/00		●		***VKDC 35703 T***		
214 i, 214 Si	11/95 → 12/97		●		—	VKD 35011 T	
214 i, 214 Si	11/95 → 03/00		●		***VKDC 35703 T***		
216 Si	11/95 → 12/97		●		—	VKD 35011 T	
216 Si	11/95 → 03/00		●		***VKDC 35703 T***		
218 K Vi	11/95 → 12/97		●		—	VKD 35011 T	
218 K Vi	11/95 → 03/00		●		***VKDC 35703 T***		
220 D/SD, 220 SDi	11/95 → 12/97		●		—	VKD 35011 T	
220 D/SD, 220 SDi	11/95 → 03/00		●		***VKDC 35703 T***		

ROVER .../...						
200 (RF) 11/95 → 03/00		○	***VKDA 40700 T***		
200 (XW)					
214, 214 GSi/Si, 214 Si/Gsi, 216 GSi, 216 GTi, 220 GTi, 220 Turbo 10/89 → 10/95	●		—	VKD 35011 T	
214, 214 GSi/Si, 214 Si/Gsi, 216 GSi, 220 Turbo 10/89 → 10/95	●				***VKDP 83301 T***
218 TD, 218 D 09/91 → 10/95	●		—	VKD 35011 T	***VKDP 83301 T***
214, 214 GSi/Si, 214 Si/Gsi, 216 GSi, 216 GTi, 220 GTi, 220 Turbo 10/89 → 10/95		○	***VKDA 40700 T***		
214, 214 GSi/Si, 214 Si/Gsi, 216 GSi, 220 Turbo 10/89 → 10/95		○			***VKDP 93300 T***
218 TD, 218 D 09/91 → 10/95		○	***VKDA 40700 T***		***VKDP 93300 T***
200 (XW)					
216 10/92 → 12/97	●		—	VKD 35011 T	
216 03/96 → 06/05	●		***VKDC 35703 T***		
220 GSi, 220 Turbo 10/92 → 12/97	●		—	VKD 35011 T	
220 GSi, 220 Turbo 03/96 → 06/05	●		***VKDC 35703 T***		
200 (XW) 10/92 → 06/05		○	***VKDA 40700 T***		
25					
25 10/99 → 06/05	●		***VKDC 35703 T***		
1.4 16V, 1.6 16V, 1.8 16V 10/99 → 06/05 ~~SPS~~	●				***VKDP 83301 T***
2.0 iDT 10/99 → 06/05 ~~SPS~~	●				***VKDP 83301 T***
25 10/99 → 06/05		○	***VKDA 40700 T***		
1.4 16V, 1.6 16V, 1.8 16V 10/99 → 06/05 ~~SPS~~		○			***VKDP 93300 T***
2.0 iDT 10/99 → 06/05 ~~SPS~~		○			***VKDP 93300 T***
400 (RT)					
400 (RT) 05/95 → 03/00	●		***VKDA 35705 T***		
400 (RT) 05/95 → 03/00		○	***VKDA 40700 T***		
400 (RT)					
400 (RT) 05/95 → 03/00	●		***VKDA 35705 T***		
400 (RT) 05/95 → 03/00		○	***VKDA 40700 T***		
400 (XW)					
400 (XW) 04/90 → 04/95	●		—	VKD 35011 T	
400 (XW) 04/90 → 04/95		○	***VKDA 40700 T***		
400 (XW) Tourer					
400 (XW) Tourer 03/96 → 11/98	●		***VKDC 35703 T***		
400 (XW) Tourer 09/93 → 11/98		○	***VKDA 40700 T***		
45 (RT)					
45 (RT) 02/00 → 06/05	●		***VKDA 35705 T***		***VKDP 83300 T***
45 (RT) 02/00 → 06/05		○	***VKDA 40700 T***		

45 (RT)							
45 (RT)	02/00 → 06/05	●		***VKDA 35705 T***		***VKDP 83300 T***
45 (RT)	02/00 → 06/05		○	***VKDA 40700 T***		
75 (RJ)							
75 (RJ)	02/99 → 06/05	●		***VKDC 35709 T***		VKDP_____
75 (RJ)	02/99 → 01/04		○			VKDP_____
75 (RJ) Tourer							
75 (RJ) Tourer	08/01 → 06/05	●		***VKDC 35709 T***		VKDP_____
75 (RJ) Tourer	08/01 → 01/04		○			VKDP_____
MAESTRO							
MAESTRO	09/90 → 01/95	●		—	**VKD 35012 T**	VKDP_____
MAESTRO	09/90 → 01/95		○			**VKDP 43700 T**
MONTEGO							
MONTEGO	10/88 → 10/95	●		—	**VKD 35012 T**	VKDP_____
MONTEGO	10/88 → 10/95		○			**VKDP 43700 T**
MONTEGO							
MONTEGO	01/86 → 12/93	●		—	**VKD 35012 T**	VKDP_____
MONTEGO	10/84 → 12/93		○			**VKDP 43700 T**
STREETWISE							
STREETWISE	08/03 → 06/05	●				***VKDP 83301 T***
STREETWISE	08/03 → 06/05		○			***VKDP 93300 T***
SAAB							
900 II							
900 II	07/93 → 02/98	●		—	**VKD 35032 T**	**VKDP 33406 T**
900 II							
900 II	12/93 → 02/98	●		—	**VKD 35032 T**	**VKDP 33406 T**
900 II							
900 II	07/93 → 02/98	●		—	**VKD 35032 T**	**VKDP 33406 T**
9000							
9000	04/85 → 12/98	●		**VKDC 35420 T**		
2.0 -16 CD, 2.0 -16 Turbo CD, 2.3 -16 CDE, 2.3 -16 CDE Eco-Power, 3.0 -24 V6 CD/CDE	09/89 → 12/98	●				**VKDP 33408 T**
9000							
9000	09/84 → 12/98	●		**VKDC 35420 T**		

SAAB .../...

9-3 I

2.0 i, 2.0 SE Turbo, 2.0 Turbo, 2.3 i, 2.3 Turbo		02/98 → 12/01		●		VKDA 35520 T	VKD 35032 T	VKDP 33403 T
2.2 TiD		02/98 → 12/01		●		VKDA 35520 T	VKD 35032 T	
2.2 TiD		02/98 → 09/02		●				VKDP 33403 T

9-3 I

9-3 I		02/98 → 08/03		●		VKDA 35520 T	VKD 35032 T	VKDP 33403 T

9-5

9-5		09/97 → 01/02		●		VKDA 35521 T	VKD 35032 T	VKDP 33404 T

9-5

9-5		10/98 → 01/02		●		VKDA 35521 T	VKD 35032 T	VKDP 33404 T

SEAT

ALHAMBRA

ALHAMBRA		04/96 → 08/05		●		VKDA 35110 T		
ALHAMBRA		04/96 → 02/06	4, SPS	●				VKDP 33405 T
4MOTION: ALHAMBRA		02/01 → 08/05		●		VKDA 35110 T		
4MOTION: ALHAMBRA		02/01 → 02/06	4, SPS	●				VKDP 33405 T

ALTEA (5P1)

ALTEA (5P1)		03/04 → 08/05		●		VKDA 35122 T	VKD 35025 T	
ALTEA (5P1)		03/04 → 08/05			○	*VKDA 40124 T*		

AROSA

AROSA		05/97 → 08/05		●		VKDA 35111 T		VKDP 33107 T
AROSA		05/97 → 04/04			○	—		

CORDOBA I (6K2/C2)

1.0 i, 1.4 i, 1.4 i 16V, 1.6 i	1F, ABD, ABU, AEE, AER, AEX, AFH, AFT, AKV, ALM, APQ	02/93 → 06/99	CH 6KTR080-001 |→, →| CH 6KX400.000	●				VKDP 33100 T
1.0 i, 1.4 i	ABD, AER, AEX	10/95 → 06/99		●		VKDA 35110 T		
1.4 i	ABD	06/94 → 09/95		●		VKDC 35102 T		
1.4 i, 1.4 i 16V	AFH, AKV, APQ	06/94 → 06/99		●		VKDA 35110 T		
1.6 i	1F, ABU	02/93 → 09/95		●		VKDC 35102 T		
1.6 i	AEE, AFT, ALM	02/93 → 06/99		●		VKDA 35110 T		
1.6 i, 1.8 i, 1.8 i 16V, 2.0 i	2E, ABS, ABU, ADL, ADZ, AEE, AGG, ALM	02/93 → 05/94	→| CH 6KTR080-000	●				VKDP 33108 T
1.6 i	1F, ABU	10/95 → 06/99		●		VKDA 35110 T		
1.8 i	ABS, ADZ	02/93 → 09/95		●		VKDC 35102 T		
1.8 i 16V	ADL	10/93 → 02/94		●		VKDC 35102 T		
1.8 i 16V	ADL	03/94 → 08/96		●		VKDA 35110 T		
1.8 i	ADZ	10/95 → 06/99		●		VKDA 35110 T		
2.0 i	2E	02/93 → 02/94		●		VKDC 35102 T		
2.0 i, 2.0 i 16V	ABF, AGG	02/93 → 06/99		●		VKDA 35110 T		
2.0 i	2E	03/94 → 06/99		●		VKDA 35110 T		
1.9 D, 1.9 TD	1Y, AAZ	02/93 → 09/95		●		VKDC 35102 T		
1.9 D, 1.9 TD	1Y, AAZ	02/93 → 05/94	→| CH 6KTR080-000	●				VKDP 33108 T

1.9 D, 1.9 SDI, 1.9 TD, 1.9 TDI	1Y, 1Z, AAZ, AEY, AFN, AHU	10/95 → 06/99		●		**VKDA 35110 T**		
1.0 i, 1.4 i, 1.4 i 16V, 1.6 i, 1.8 i, 1.8 i 16V, 2.0 i, 2.0 i 16V	1F, 2E, ABD, ABF, ABS, ABU, ADL, ADZ, AEE, AER, AEX, AFH, AFT, AGG, AKV, ALM, APQ	02/93 → 06/99			○	**VKDA 40101 T**		
1.0 i, 1.4 i, 1.4 i 16V, 1.6 i, 1.8 i	1F, ABD, ABS, ABU, ADZ, AEE, AER, AEX, AFH, AFT, AKV, ALM, APQ	02/93 → 06/99			○			**VKDP 43105 T**
1.9 D, 1.9 SDI, 1.9 TD, 1.9 TDI	1Y, 1Z, AAZ, AEY, AFN, AHU	02/93 → 06/99			○	**VKDA 40101 T**		**VKDP 43105 T**
CORDOBA I (6K5) Vario								
1.4 i		09/96 → 04/99		●		**VKDA 35110 T**		
1.4 i		05/99 → 06/99		●		**VKDA 35115 T**	**VKD 35025 T**	
1.6 i		09/96 → 04/99		●		**VKDA 35110 T**		
1.6 i		05/99 → 06/99		●		**VKDA 35115 T**	**VKD 35025 T**	
1.7 SDI		07/97 → 04/99		●		**VKDA 35110 T**		
1.7 SDI		05/99 → 06/99		●		**VKDA 35115 T**	**VKD 35025 T**	
1.9 SDI, 1.9 TDI		08/96 → 04/99		●		**VKDA 35110 T**		
1.9 SDI, 1.9 TDI		05/99 → 06/99		●		**VKDA 35115 T**	**VKD 35025 T**	
CORDOBA I (6K5) Vario		08/96 → 06/99			○	**VKDA 40101 T**		
CORDOBA II (6K2)								
CORDOBA II (6K2)		06/99 → 10/02		●		**VKDA 35115 T**	**VKD 35025 T**	
1.0, 1.0 16V, 1.4, 1.4 16V, 1.6		06/99 → 10/02	~~SPS~~, CH 6KX400.001 →, ~~HD~~	●				**VKDP 33100 T**
1.9 SDI, 1.9 TDI		06/99 → 10/02	~~SPS~~, CH 6KX400.001 →, ~~HD~~	●				**VKDP 33100 T**
1.0, 1.0 16V, 1.4, 1.4 16V, 1.6, 1.8 T 20V Cupra		06/99 → 10/02			○	**VKDA 40101 T**		
1.0, 1.0 16V, 1.4, 1.4 16V, 1.6		06/99 → 10/02			○			**VKDP 43105 T**
1.9 SDI, 1.9 TDI		06/99 → 10/02			○	**VKDA 40101 T**		**VKDP 43105 T**
CORDOBA II (6K5) Vario								
CORDOBA II (6K5) Vario		06/99 → 08/05		●		**VKDA 35115 T**	**VKD 35025 T**	
CORDOBA II (6K5) Vario		06/99 → 08/05			○	**VKDA 40101 T**		
CORDOBA III (6L2)								
1.2, 1.4 16V, 1.6, 2.0		09/02 → 08/05	~~SPS~~	●		**VKDA 35115 T**	**VKD 35025 T**	
1.4 TDI, 1.9 SDI, 1.9 TDI		09/02 → 08/05	~~SPS~~	●		**VKDA 35115 T**	**VKD 35025 T**	
1.2, 1.4 16V, 1.6		09/02 → 08/05	~~SPS~~		○	**VKDA 40104 T**		
1.2, 1.4 16V, 1.6, 2.0		09/02 → 08/05	SPS		○	***VKDA 40123 T***		
1.4 TDI, 1.9 SDI, 1.9 TDI		09/02 → 08/05	~~SPS~~		○	**VKDA 40104 T**		
1.4 TDI, 1.9 SDI, 1.9 TDI		09/02 → 08/05	SPS		○	***VKDA 40123 T***		
IBIZA I (021A)								
0.9, 1.2, 1.2 i		08/86 → 02/93		●		**VKDA 35702 T**	**VKD 35012 T**	**VKDP 32103 T**
1.2		11/84 → 07/86		●		**VKDA 37201 T**		**VKDP 32103 T**
1.5		11/84 → 07/86		●		**VKDA 37201 T**		**VKDP 32103 T**
1.5, 1.5 i, 1.5 i CAT		08/86 → 02/93		●		**VKDA 35702 T**	**VKD 35012 T**	**VKDP 32103 T**
1.7		01/91 → 02/93		●		**VKDA 35702 T**	**VKD 35012 T**	**VKDP 32103 T**
1.7 D		06/84 → 07/86		●		**VKDA 37201 T**		**VKDP 32103 T**

SEAT .../...

1.7 D		08/86 → 02/93		●		VKDA 35702 T	VKD 35012 T	VKDP 32103 T
IBIZA II (6K1)								
1.0, 1.3 i	AAU, AAV	03/93 → 09/95		●		VKDC 35102 T		
1.0, 1.3 i, 1.4 i, 1.6 i, 1.8 i, 2.0 i	2E, AAU, AAV, ABD, ABS, ABU, ADZ, AEE, AEX, AGG, AKV, ALM, APQ	03/93 → 05/94	→| CH 6KTR080-000	●				VKDP 33108 T
1.0, 1.0 i, 1.3 i, 1.4 i, 1.4 i 16V, 1.6 i, 1.8 i	1F, AAU, AAV, ABD, ABS, ABU, ADZ, AEE, AER, AEX, AFH, AFT, AKV, ALM, APQ	03/93 → 08/99	CH 6KTR080-001 |→, →| CH 6KX400.000	●				VKDP 33100 T
1.0, 1.0 i	AAU, AER	10/95 → 08/99		●		VKDA 35110 T		
1.4 i	ABD	09/93 → 09/95		●		VKDC 35102 T		
1.4 i, 1.4 i 16V	AFH, AKV, APQ	09/93 → 08/99		●		VKDA 35110 T		
1.4 i	ABD, AEX	10/95 → 08/99		●		VKDA 35110 T		
1.6 i	1F, ABU	03/93 → 09/95		●		VKDC 35102 T		
1.6 i	AEE, AFT, ALM	03/93 → 08/99		●		VKDA 35110 T		
1.6 i	1F	10/95 → 08/99		●		VKDA 35110 T		
1.8 i	ABS, ADZ	03/93 → 09/95		●		VKDC 35102 T		
1.8 i 16V	ADL	11/93 → 02/94		●		VKDC 35102 T		
1.8 i 16V	ADL	03/94 → 08/96		●		VKDA 35110 T		
1.8 i	ADZ	10/95 → 08/99		●		VKDA 35110 T		
2.0 i	2E	03/93 → 02/94		●		VKDC 35102 T		
2.0 i, 2.0 i 16V	ABF, AGG	03/93 → 08/99		●		VKDA 35110 T		
2.0 i	2E	03/94 → 08/99		●		VKDA 35110 T		
1.9 D, 1.9 TD	1Y, AAZ	03/93 → 09/95		●		VKDC 35102 T		
1.9 D, 1.9 TD	1Y, AAZ	03/93 → 05/94	→| CH 6KTR080-000	●				VKDP 33108 T
1.9 D, 1.9 SDI, 1.9 TD, 1.9 TDI	1Y, 1Z, AAZ, AEY, AFN, AHU	10/95 → 08/99		●		VKDA 35110 T		
1.0, 1.0 i, 1.3 i, 1.4 i, 1.4 i 16V, 1.6 i, 1.8 i, 1.8 i 16V, 2.0 i, 2.0 i 16V	1F, 2E, AAU, AAV, ABD, ABF, ABS, ABU, ADL, ADZ, AEE, AER, AEX, AFH, AFT, AGG, AKV, ALM, APQ	03/93 → 08/99			○	VKDA 40101 T		
1.0, 1.0 i, 1.3 i, 1.4 i, 1.4 i 16V, 1.6 i, 1.8 i	1F, AAU, AAV, ABD, ABS, ABU, ADZ, AEE, AER, AEX, AFH, AFT, AKV, ALM, APQ	03/93 → 08/99			○			VKDP 43105 T
1.9 D, 1.9 SDI, 1.9 TD, 1.9 TDI	1Y, 1Z, AAZ, AEY, AFN, AHU	03/93 → 08/99			○	VKDA 40101 T		VKDP 43105 T
IBIZA III (6K1)								
IBIZA III (6K1)		08/99 → 02/02		●		VKDA 35115 T	VKD 35025 T	
1.0, 1.0 16V, 1.4, 1.4 16V, 1.6		08/99 → 02/02	~~SPS~~, CH 6KX400.001 |→, ~~HD~~	●				VKDP 33100 T
1.9 SDI, 1.9 TDI		08/99 → 02/02	~~SPS~~, CH 6KX400.001 |→, ~~HD~~	●				VKDP 33100 T
IBIZA III (6K1)		08/99 → 02/02			○	VKDA 40101 T		
1.0, 1.0 16V, 1.4, 1.4 16V, 1.6		08/99 → 02/02	~~SPS~~, CH 6KX400.001 |→, ~~HD~~		○			VKDP 43105 T

1.9 SDI, 1.9 TDI ... 08/99 → 02/02 ... ~~SPS~~, CH 6KX400.001 →, ~~HD~~		○			**VKDP 43105 T**
IBIZA IV (6L)					
1.2, 1.4 16V, 1.6 ... 02/02 → 08/05 ... 12), 13), 14)	●		**VKDA 35115 T**	**VKD 35025 T**	
1.4 TDI, 1.9 SDI, 1.9 TDI ... 02/02 → 08/05 ... 12), 13), 14)	●		**VKDA 35115 T**	**VKD 35025 T**	
1.2, 1.4 16V, 1.6 ... 02/02 → 08/05 ... 15), 16)		○	**VKDA 40104 T**		
1.2, 1.4 16V, 1.6 ... 02/02 → 04/05 ... 17), 18)		○	***VKDA 40123 T***		
1.8 T Cupra R, 1.8 T FR ... 12/03 → 04/05 ...		○	***VKDA 40123 T***		
1.4 TDI, 1.9 SDI, 1.9 TDI ... 02/02 → 08/05 ... 15), 16)		○	**VKDA 40104 T**		
1.4 TDI, 1.9 SDI, 1.9 TDI ... 02/02 → 04/05 ... 17), 18)		○	***VKDA 40123 T***		
1.9 TDI Cupra R ... 01/04 → 04/05 ...		○	***VKDA 40123 T***		
INCA					
INCA ... 11/95 → 08/05 ...	●		**VKDA 35110 T**		
LEON (1M1)					
1.4 16V, 1.6, 1.6 16 V, 1.8 20V, 1.8 20V T, 1.8 T Cupra R ... 11/99 → 08/05 ... 19)	●		**VKDA 35113 T**		
1.4 16V, 1.6, 1.6 16 V, 1.8 20V ... 11/99 → 02/06 ...	●				**VKDP 33101 T**
1.9 SDI, 1.9 TDI ... 11/99 → 08/05 ... 19)	●		**VKDA 35113 T**		**VKDP 33101 T**
4MOTION: 1.8 20V T 4, 2.8 Cupra 4 ... 11/99 → 08/05 ... 19)	●		**VKDA 35113 T**		
4MOTION: 1.9 TDI Syncro ... 05/02 → 08/05 ... 19)	●		**VKDA 35113 T**		**VKDP 33101 T**
1.4 16V, 1.6, 1.6 16 V, 1.8 20V, 1.8 20V T, 1.8 T Cupra R ... 11/99 → 08/05 ... 20), 21), FWD		○	**VKDA 40104 T**		
1.4 16V, 1.6, 1.6 16 V, 1.8 20V, 1.8 20V T, 1.8 T Cupra R ... 11/99 → 08/05 ... 22), 23), FWD		○	***VKDA 40123 T***		
1.4 16V, 1.6, 1.6 16 V, 1.8 20V ... 11/99 → 02/06 ...		○			**VKDP 43106 T**
1.9 SDI, 1.9 TDI ... 11/99 → 08/05 ... 20), 21), FWD		○	**VKDA 40104 T**		**VKDP 43106 T**
1.9 SDI, 1.9 TDI ... 11/99 → 08/05 ... 22), 23), FWD		○	***VKDA 40123 T***		**VKDP 43106 T**
LEON (1P1)					
LEON (1P1) ... 09/05 → 09/05 ...	●		**VKDA 35122 T**	**VKD 35025 T**	
LEON (1P1) ... 09/05 → 05/06 ...		○	***VKDA 40124 T***		
MALAGA					
1.2 ... 11/84 → 03/89 ...	●		**VKDA 37201 T**		**VKDP 32103 T**
1.2, 1.2 i ... 04/89 → 12/93 ...	●		**VKDA 35702 T**	**VKD 35012 T**	**VKDP 32103 T**
1.5, 1.5 i, 1.5 i CAT ... 05/85 → 03/89 ...	●		**VKDA 37201 T**		**VKDP 32103 T**
1.5, 1.5 i, 1.5 i CAT ... 04/89 → 12/93 ...	●		**VKDA 35702 T**	**VKD 35012 T**	**VKDP 32103 T**
1.7 D ... 05/85 → 03/89 ...	●		**VKDA 37201 T**		**VKDP 32103 T**
1.7 D ... 04/89 → 12/93 ...	●		**VKDA 35702 T**	**VKD 35012 T**	**VKDP 32103 T**
MARBELLA					
0.8 ... 04/89 → 12/93 ...	●		**VKDA 35702 T**	**VKD 35012 T**	
0.9, 0.9 CAT ... 04/89 → 10/98 ...	●		**VKDA 35702 T**	**VKD 35012 T**	**VKDP 33800 T**
0.8 ... 08/86 → 03/89 ...	●		**VKDA 37201 T**		**VKDP 33800 T**
0.9, 0.9 CAT ... 01/87 → 03/89 ...	●		**VKDA 37201 T**		**VKDP 33800 T**
RONDA					
1.2 ... 08/83 → 12/86 ...	●		**VKDA 37201 T**		
1.4 ... 06/82 → 07/86 ...	●		**VKDA 37201 T**		

SEAT .../...

1.5, 1.6	08/83 → 12/86	●		**VKDA 37201 T**		
1.7 Diesel	06/82 → 12/86	●		**VKDA 37201 T**		
TERRA						
TERRA	01/87 → 03/89	●		**VKDA 37201 T**		
TERRA	01/87 → 12/95	●				**VKDP 33800 T**
TOLEDO I (1L)						
1.6 i	05/91 → 08/95	●		**VKDC 35102 T**		
1.6 i	09/95 → 03/99	●		**VKDA 35110 T**		
1.8 16V, 1.8 i	05/91 → 08/95	●		**VKDC 35102 T**		
1.8 16V, 1.8 i	09/95 → 03/99	●		**VKDA 35110 T**		
2.0 i	05/91 → 08/95	●		**VKDC 35102 T**		
2.0 i 16V	11/93 → 03/99	●		**VKDA 35110 T**		
2.0 i	09/95 → 03/99	●		**VKDA 35110 T**		
1.9 D, 1.9 TD	05/91 → 08/95	●		**VKDC 35102 T**		
1.9 D, 1.9 SDI, 1.9 TDI	08/95 → 03/99	●		**VKDA 35110 T**		
1.9 D, 1.9 TD	09/95 → 03/99	●		**VKDA 35110 T**		
TOLEDO I (1L)	05/91 → 03/99		○	**VKDA 40101 T**		**VKDP 43100 T**
TOLEDO II (1M2)						
1.4 16V, 1.6, 1.6 16V, 1.8 20V, 1.8 20VT, 2.3 V5, 2.3 V5 20V	04/99 → 08/05 ...19)	●		**VKDA 35113 T**		
1.4 16V, 1.6, 1.6 16V, 1.8 20V, 2.3 V5, 2.3 V5 20V	04/99 → 02/06	●				**VKDP 33101 T**
1.9 SDI, 1.9 TDI	04/99 → 08/05 ...19)	●		**VKDA 35113 T**		**VKDP 33101 T**
1.4 16V, 1.6, 1.6 16V, 1.8 20V, 1.8 20VT, 2.3 V5, 2.3 V5 20V	04/99 → 08/05 ...20), 21)		○	**VKDA 40104 T**		
1.4 16V, 1.6, 1.6 16V, 1.8 20V, 1.8 20VT, 2.3 V5, 2.3 V5 20V	04/99 → 08/05 ...22), 23)		○	***VKDA 40123 T***		
1.4 16V, 1.6, 1.6 16V, 1.8 20V, 2.3 V5, 2.3 V5 20V	04/99 → 02/06		○			**VKDP 43106 T**
1.9 TDI	04/99 → 08/05 ...20), 21)		○	**VKDA 40104 T**		**VKDP 43106 T**
1.9 SDI, 1.9 TDI	04/99 → 08/05 ...22), 23)		○	***VKDA 40123 T***		**VKDP 43106 T**
TOLEDO III (5P2)						
TOLEDO III (5P2)	10/04 → 08/05	●		**VKDA 35122 T**	**VKD 35025 T**	
TOLEDO III (5P2)	10/04 → 08/05		○	***VKDA 40124 T***		

SKODA

FABIA (6Y2)						
1.0, 1.2, 1.4, 1.4 16V, 2.0 ...	12/99 → 08/05	●		**VKDA 35115 T**	**VKD 35025 T**	**VKDP 33800 T**
1.4 TDI, 1.9 SDI, 1.9 TDI, RS	12/99 → 08/05	●		**VKDA 35115 T**	**VKD 35025 T**	
1.4 TDI, 1.9 SDI, 1.9 TDI	12/99 → 02/06	●				**VKDP 33800 T**
1.0, 1.2, 1.4, 1.4 16V, 2.0 ...	12/99 → 08/05		○	**VKDA 40104 T**		VKDP____
1.4 TDI, 1.9 SDI, 1.9 TDI, RS	12/99 → 08/05		○	**VKDA 40104 T**		
1.4 TDI, 1.9 SDI, 1.9 TDI	12/99 → 02/06		○			VKDP____
FABIA (6Y3)						
FABIA (6Y3)	04/00 → 08/05	●		**VKDA 35115 T**	**VKD 35025 T**	**VKDP 33800 T**

FABIA (6Y3)	04/00 → 08/05		○	**VKDA 40104 T**		VKDP____
FABIA (6Y5)						
FABIA (6Y5)	11/00 → 08/05	●		**VKDA 35115 T**	**VKD 35025 T**	**VKDP 33800 T**
FABIA (6Y5)	11/00 → 08/05		○	**VKDA 40104 T**		
FABIA						
FABIA	05/03 → 08/05	●		**VKDA 35115 T**	**VKD 35025 T**	
FABIA	05/03 → 08/05		○	**VKDA 40104 T**		
FAVORIT						
FAVORIT	05/89 → 09/94	●		**VKDA 35112 T**		**VKDP 33203 T**
FAVORIT	05/89 → 09/94		○	**VKDA 40111 T**		**VKDP 43100 T**
FAVORIT						
FAVORIT	08/91 → 06/95	●		**VKDA 35112 T**		**VKDP 33203 T**
FAVORIT	08/91 → 06/95		○	**VKDA 40111 T**		**VKDP 43100 T**
FAVORIT						
FAVORIT	12/92 → 06/95	●		**VKDA 35112 T**		**VKDP 33203 T**
FAVORIT	12/92 → 06/97		○	**VKDA 40111 T**		
FELICIA I						
FELICIA I	10/94 → 03/98	●		**VKDA 35112 T**		**VKDP 33110 T**
FELICIA I	10/94 → 03/98		○	**VKDA 40111 T**		**VKDP 43100 T**
FELICIA I						
FELICIA I	08/95 → 03/98	●		**VKDA 35112 T**		**VKDP 33110 T**
FELICIA I	08/95 → 03/98		○	**VKDA 40111 T**		
FELICIA II						
FELICIA II	01/98 → 06/01	●		**VKDA 35112 T**		**VKDP 33110 T**
FELICIA II	01/98 → 06/01		○	**VKDA 40111 T**		**VKDP 43100 T**
FELICIA II						
FELICIA II	01/98 → 06/01	●		**VKDA 35112 T**		**VKDP 33110 T**
FELICIA II	01/98 → 06/01		○	**VKDA 40111 T**		
FELICIA II						
FELICIA II	06/97 → 08/05	●		**VKDA 35112 T**		**VKDP 33110 T**
FELICIA II	06/97 → 08/05		○	**VKDA 40111 T**		
OCTAVIA (1U2)						
OCTAVIA (1U2)	09/96 → 08/05	●		**VKDA 35113 T**		**VKDP 33101 T**
4X4: 1.8 T	05/01 → 08/05	●		**VKDA 35113 T**		**VKDP 33101 T**
OCTAVIA (1U2)	09/96 → 08/05 FWD		○	**VKDA 40104 T**		**VKDP 43106 T**
4X4: 1.8 T	05/01 → 02/06		○			**VKDP 43106 T**
OCTAVIA (1U5)						
1.4 16V, 1.6, 1.8 20V, 1.8 T, RS 1.8 T, 2.0	07/98 → 08/05	●		**VKDA 35113 T**		

SKODA .../...

1.6, 1.8 20V, 1.8 T, 2.0	07/98 → 02/06		●			**VKDP 33101 T**
1.9 SDI, 1.9 TDI	07/98 → 08/05		●	**VKDA 35113 T**		**VKDP 33101 T**
4X4: 1.8 T, 2.0	05/01 → 08/05		●	**VKDA 35113 T**		
4X4: 1.9 TDI	11/99 → 08/05		●	**VKDA 35113 T**		
4X4: 1.9 TDI	11/99 → 09/00		●			**VKDP 33101 T**
1.4 16V	08/00 → 07/01	FWD	○	**VKDA 40104 T**		**VKDP 43106 T**
1.4 16V	08/01 → 08/05	FWD	○	***VKDA 40123 T***		**VKDP 43106 T**
1.6	07/98 → 07/01	FWD	○	**VKDA 40104 T**		**VKDP 43106 T**
1.6	08/01 → 08/05	FWD	○	***VKDA 40123 T***		**VKDP 43106 T**
1.8 20V, 1.8 T	07/98 → 07/01	FWD	○	**VKDA 40104 T**		**VKDP 43106 T**
1.8 20V, 1.8 T, RS 1.8 T	08/01 → 08/05	FWD	○	***VKDA 40123 T***		**VKDP 43106 T**
2.0	04/99 → 07/01	FWD	○	**VKDA 40104 T**		**VKDP 43106 T**
2.0	08/01 → 08/05	FWD	○	***VKDA 40123 T***		**VKDP 43106 T**
1.9 SDI, 1.9 TDI	07/98 → 07/01	FWD	○	**VKDA 40104 T**		**VKDP 43106 T**
1.9 SDI, 1.9 TDI	08/01 → 08/05	FWD	○	***VKDA 40123 T***		**VKDP 43106 T**
4X4: 1.8 T, 2.0	05/01 → 02/06		○			**VKDP 43106 T**
4X4: 1.9 TDI	11/99 → 02/06		○			**VKDP 43106 T**

OCTAVIA (1Z3)

OCTAVIA (1Z3)	06/04 → 08/05		●	**VKDA 35122 T**	**VKD 35025 T**	
OCTAVIA (1Z3)	06/04 → 08/05		○	***VKDA 40126 T***		

OCTAVIA (1Z5)

1.6, 1.6 FSI, 2.0 FSI	06/04 → 08/05		●	**VKDA 35122 T**	**VKD 35025 T**	
1.9 TDI, 2.0 TDI	06/04 → 08/05		●	**VKDA 35122 T**	**VKD 35025 T**	
4X4: 2.0 FSI	11/04 → 08/05		●	**VKDA 35122 T**	**VKD 35025 T**	
4X4: 1.9 TDI	11/04 → 08/05		●	**VKDA 35122 T**	**VKD 35025 T**	
1.6, 1.6 FSI, 2.0 FSI	06/04 → 08/05		○	***VKDA 40126 T***		
1.9 TDI, 2.0 TDI	06/04 → 08/05		○	***VKDA 40126 T***		
4X4: 2.0 FSI	11/04 → 08/05		○	***VKDA 40126 T***		
4X4: 1.9 TDI	11/04 → 08/05		○	***VKDA 40126 T***		

SUPERB

SUPERB	02/02 → 08/05		●	VKDA____		
SUPERB	02/02 → 08/05		○	***VKDA 40128 T***		

SUZUKI

SWIFT II

1.3 (AB35, AH35, MA, SF413), 1.3 GTi (AA34, SF413)	03/96 → 05/01		●	VKDA____		
4 WD: 1.3 4WD (AA35, SF413)	03/96 → 05/01		●	VKDA____		

TOYOTA

AVENSIS (_T22_)

AVENSIS (_T22_)	09/97 → 05/04		●	**VKDC 81112 T**		
AVENSIS (_T22_)	09/97 → 12/05		●			**VKDP 83106 T**
AVENSIS (_T22_)	09/97 → 12/05		○			**VKDP 83201 T**

AVENSIS (_T25_)

AVENSIS (_T25_)	04/03 → 12/05		●			VKDP____

AVENSIS (_T25_)		04/03 → 12/05			○			—
CAMRY								
1.8 Turbo-D		10/84 → 07/85		●		**VKDC 81105 T**		
2.0 D (CV11, SV11)		01/83 → 07/86		●		**VKDC 81105 T**		
CARINA E								
1.6 (AT190),								
1.6 16V (AT190_),								
1.6 GLI (AT190, AT190_),								
1.6 i (AT190_)		04/92 → 08/95	~~Mod~~. XL (LHD),	●		VKDC_____		
1.6 (AT190), 1.6 16V		10/95 → 01/96	~~Mod~~. XL (LHD),	●		VKDC_____		
2.0 GLI (ST191, ST191_)		04/92 → 01/96	~~Mod~~. GT,	●		VKDC_____		
2.0 i (ST191, ST191_)		12/93 → 08/95	~~Mod~~. GT,	●		VKDC_____		
2.0 D (CT190, CT190_)		04/92 → 01/96		●		VKDC_____		
2.0 TD (CT190)		01/96 → 09/97		●		VKDC_____		
2.0 GLI (ST171)		12/87 → 03/92		●		**VKDC 81102 T**		
2.0 D (CT170)		12/87 → 01/92		●		**VKDC 81102 T**		
COROLLA								
1.3 (AE80/EE80)		06/83 → 05/85		●		**VKDC 81105 T**		
1.3 (EE90), 1.3 i (EE90)		08/87 → 08/88		●		**VKDC 81104 T**		VKDP_____
1.3 12V (EE100_)		07/92 → 05/95		●		**VKDC 81103 T**		
1.6 (AE82)		06/83 → 05/85		●		**VKDC 81105 T**		
1.6 (AE92), 1.6 XLI		08/87 → 06/90		●		**VKDC 81104 T**		VKDP_____
1.6 (AE92)		08/87 → 12/89	~~Mod~~. GT	●		**VKDC 81104 T**		VKDP_____
1.6 (AE92)		02/88 → 10/88		●		**VKDC 81104 T**		VKDP_____
1.6 i		11/89 → 03/90		●		**VKDC 81104 T**		VKDP_____
1.8 D (CE80)		06/83 → 05/85		●		**VKDC 81105 T**		
1.8 D		06/83 → 06/93		●		**VKDC 81104 T**		VKDP_____
1.8 D, 1.8 D (CE90)		05/87 → 08/88		●		**VKDC 81104 T**		
STARLET								
1.0 (EP70L)		10/84 → 12/89		●		—		**VKDP 82100 T**
1.0 (EP80_)		12/89 → 12/92		●		—		
1.0 (EP81)	1E	06/94 → 03/95		●		—		**VKDP 82100 T**
1.3 (EP71L)		10/84 → 12/89		●		—		**VKDP 82100 T**
1.3 12V (EP81, EP81_) CAT		12/89 → 05/94		●		—		
1.3 (EP82),								
1.3 12V (EP81) CAT		06/94 → 03/95		●		—		
YARIS I								
YARIS I		04/99 → 01/00	(EUR)	●		VKDC_____		
YARIS I		04/99 → 01/00	(EUR)	●		VKDC_____		
1.0 16V (SCP10_), 1.3,								
1.3 16V (NCP10_),								
1.5 TS (NCP13),								
1.5 VVT-i TS		04/99 → 12/05	(EUR)	●				VKDP_____
1.4 D-4D		12/01 → 12/05	(EUR)	●				VKDP_____
YARIS I		04/99 → 12/05	(EUR)		○			—
YARIS II								
1.0 (KSP90),								
1.0 16V (KSP90)		08/05 → 12/05		●		—	**VKD 35030 T**	

VAUXHALL

AGILA

AGILA	09/00 → 09/04	●	VKDA_____		
AGILA	09/00 → 12/05 →| CH YG 999 999	●			**VKDP 33509 T**
AGILA	09/00 → 12/05 CH 1G 000 001 |→	●			—

ASTRA Mk I

ASTRA Mk I	09/79 → 08/86	●			**VKDP 33500 T**

ASTRA Mk I

ASTRA Mk I	09/79 → 08/86	●			**VKDP 33500 T**

ASTRA Mk II

1.2, 1.3, 1.4 i, 1.4 S, 1.6	12 S, 13 S, 14 NV, 16 SV, C 14 NZ	09/84 → 08/91	●	**VKDC 35504 T**	**VKDP 33500 T**
1.6 S, 1.8 GTE, 2.0 GTE, 2.0 GTE 16V	16 SH, 18 E, 18 SE, 20 SEH, 20 XE	09/84 → 08/91	●	**VKDC 35505 T**	**VKDP 33500 T**
1.6 D, 1.7 D	16 DA, 17 DR	09/84 → 08/91	●	**VKDC 35505 T**	**VKDP 33500 T**

ASTRA Mk II

1.6 i, 1.6 i CAT	16 SV, C 16 LZ, C 16 NZ, E 16 NZ	01/87 → 08/93	●	**VKDC 35504 T**	**VKDP 33500 T**
2.0 i, 2.0 i CAT	20 NE, C 20 NE	01/87 → 08/93	●	**VKDC 35505 T**	**VKDP 33500 T**

ASTRA Mk II

1.2, 1.3, 1.4 S, 1.6	12 S, 13 S, 14 NV, 16 SV	09/84 → 08/91	●	**VKDC 35504 T**	**VKDP 33500 T**
1.6 S, 1.8 i	16 SH, 18 E	09/84 → 08/91	●	**VKDC 35505 T**	**VKDP 33500 T**
1.5 DT	15 DT (T4EC1)	01/88 → 08/91	●	**VKDC 35504 T**	**VKDP 33500 T**
1.6 D, 1.7 D	16 DA, 17 D	09/84 → 08/91	●	**VKDC 35505 T**	**VKDP 33500 T**

ASTRA Mk II

1.3, 1.4 i	13 S, C 14 NZ	09/85 → 12/91	●	**VKDC 35504 T**	**VKDP 33500 T**
1.6, 1.6 S, 1.8, 1.8 i	16 SH, 18 E, 18 SE	09/85 → 12/91	●	**VKDC 35505 T**	**VKDP 33500 T**
1.5 DT	15 DT, 15 DT (T4EC1)	01/87 → 08/90	●	**VKDC 35504 T**	**VKDP 33500 T**
1.6 D, 1.7 D	16 DA, 17 D	09/85 → 12/91	●	**VKDC 35505 T**	**VKDP 33500 T**

ASTRA Mk III

1.4 i, 1.4 i 16V, 1.4 S, 1.6 i, 1.6 i 16V, 1.8 i, 1.8 i 16V, 2.0 i, 2.0 i 16V		09/91 → 02/98 →| CH T2677310	●	**VKDA 35503 T**	
1.4 i, 1.4 i 16V, 1.4 S, 1.6 i, 1.6 i 16V, 1.8 i, 1.8 i 16V, 2.0 i, 2.0 i 16V		09/91 → 02/98 CH T2677311 |→	●	**VKDA 35515 T**	
1.4 i, 1.4 i 16V, 1.4 S, 1.6 i, 1.6 i 16V, 1.8 i, 1.8 i 16V		09/91 → 02/98	●		**VKDP 33501 T**
2.0 i		09/91 → 02/98	●		**VKDP 33501 T**
2.0 i 16V		09/91 → 02/98	●		**VKDP 33500 T**
1.7 D, 1.7 TD		09/91 → 02/98 →| CH T2677310	●	**VKDA 35503 T**	**VKDP 33501 T**
1.7 D, 1.7 TD		09/91 → 02/98 CH T2677311 |→	●	**VKDA 35515 T**	**VKDP 33501 T**

ASTRA Mk III

ASTRA Mk III		03/93 → 03/01 →| CH T2677310	●	**VKDA 35503 T**	**VKDP 33501 T**

ASTRA Mk III	03/93 → 03/01	CH T2677311 →		●		VKDA 35515 T		VKDP 33501 T
ASTRA Mk III								
1.4 i, 1.4 i 16V, 1.4 S, 1.6 i, 1.6 i 16V, 1.6 Si, 1.8 i, 1.8 i 16V, 2.0 i, 2.0 i 16V	03/91 → 02/98	→ CH T2677310		●		VKDA 35503 T		
1.4 i, 1.4 i 16V, 1.4 S, 1.6 i, 1.6 i 16V, 1.6 Si, 1.8 i, 1.8 i 16V, 2.0 i, 2.0 i 16V	03/91 → 02/98	CH T2677311 →		●		VKDA 35515 T		
1.4 i, 1.4 i 16V, 1.4 S, 1.6 i, 1.6 i 16V, 1.6 Si, 1.8 i, 1.8 i 16V	03/91 → 02/98			●				VKDP 33501 T
2.0 i	09/91 → 02/98			●				VKDP 33501 T
2.0 i 16V	01/94 → 02/98			●				VKDP 33500 T
1.7 D, 1.7 TD	03/91 → 02/98	→ CH T2677310		●		VKDA 35503 T		VKDP 33501 T
1.7 D, 1.7 TD	03/91 → 02/98	CH T2677311 →		●		VKDA 35515 T		VKDP 33501 T
ASTRA Mk III								
1.4 i, 1.4 i 16V, 1.6 i, 1.6 i 16V, 1.8 i, 1.8 i 16V, 2.0 i, 2.0 i 16V	09/91 → 09/98	→ CH T2677310		●		VKDA 35503 T		
1.4 i, 1.4 i 16V, 1.6 i, 1.6 i 16V, 1.8 i, 1.8 i 16V, 2.0 i, 2.0 i 16V	09/91 → 09/98	CH T2677311 →		●		VKDA 35515 T		
1.4 i, 1.4 i 16V, 1.6 i, 1.6 i 16V, 1.8 i, 1.8 i 16V	09/91 → 09/98			●				VKDP 33501 T
2.0 i	03/92 → 09/98			●				VKDP 33501 T
2.0 i 16V	02/95 → 09/98			●				VKDP 33500 T
1.7 D, 1.7 TD	12/91 → 09/98	→ CH T2677310		●		VKDA 35503 T		VKDP 33501 T
1.7 D, 1.7 TD	12/91 → 09/98	CH T2677311 →		●		VKDA 35515 T		VKDP 33501 T
ASTRA Mk IV								
ASTRA Mk IV	02/98 → 09/04			●		VKDA 35508 T		VKDP 34500 T
ASTRA Mk IV								
ASTRA Mk IV	03/01 → 09/04			●		VKDA 35508 T		
ASTRA Mk IV								
ASTRA Mk IV	03/00 → 09/04			●		VKDA 35508 T		
ASTRA Mk IV								
ASTRA Mk IV	02/98 → 09/04			●		VKDA 35508 T		VKDP 34500 T
ASTRA Mk IV								
ASTRA Mk IV	09/98 → 09/04			●		VKDA 35508 T		VKDP 34500 T
ASTRA MK V								
ASTRA MK V	03/04 → 01/06			●		—		
ASTRA MK V								
ASTRA MK V	08/04 → 01/06			●		—		
ASTRAVAN								
1.4 i, 1.6 i	01/91 → 08/98			●				VKDP 33501 T

VAUXHALL .../...

1.6 i		08/98 → 12/05	●			VKDP 34500 T
1.7 D, 1.7 TD		01/91 → 08/98	●			VKDP 33501 T
1.7 CDTI, 1.7 TD		08/98 → 12/05	●			VKDP 34500 T
2.0 DI, 2.0 DTI		08/98 → 12/05	●			VKDP 34500 T
CALIBRA						
2.0 i, 2.0 i 16V		06/90 → 07/97	●		VKDA 35501 T	
2.0 i		06/90 → 07/97	●			VKDP 33500 T
4X4: CALIBRA		06/90 → 07/97	●		VKDA 35501 T	
4X4: 2.0 i		06/90 → 07/97	●			VKDP 33500 T
CARLTON Mk III						
1.8, 1.8 i, 1.8 N, 1.8 S, 2.0, 2.0 i, 2.4 i, 2.6 i	18 NV, 18 SEH, 18 SV, 20 SE, C 20 NE, C 20 NEF, C 20 NEJ, C 24 NE, C 26 NE, E 18 NVR	09/86 → 03/94	●		VKDA 35510 T	VKD 35005 T
3000	C 30 LE	03/87 → 12/87	●		VKDA 35511 T	VKD 35005 T
3.0 3000, 3000 CAT	30 NE, C 30 NE	03/87 → 03/94	●		VKDA 35511 T	VKD 35005 T
3.0 3000 24V, 3000 24V	C 30 SE, C 30 SEJ	09/89 → 03/94	●		VKDA 35510 T	VKD 35005 T
2.2 TD, 2.3 D, 2.3 TD Interc.	23 DTR, 23 YD, 23 YDT	09/86 → 03/94	●		VKDA 35510 T	VKD 35005 T
CARLTON Mk III						
1.8, 1.8 i, 1.8 N, 1.8 S, 2.0, 2.0 i, 2.4 i, 2.6 i, 3.0 24V	18 NV, 18 SEH, 18 SV, 20 SE, C 20 NE, C 20 NEF, C 20 NEJ, C 24 NE, C 26 NE, C 30 SEJ, E 18 NVR	09/86 → 03/94	●		VKDA 35510 T	VKD 35005 T
3.0	C 30 NE	03/87 → 03/94	●		VKDA 35511 T	VKD 35005 T
2.2 TD, 2.3 D, 2.3 TD Interc.	23 DTR, 23 YD, 23 YDT	09/86 → 03/94	●		VKDA 35510 T	VKD 35005 T
CAVALIER Mk II						
CAVALIER Mk II		09/81 → 08/88	●		—	VKD 35005 T	VKDP 33500 T
CAVALIER Mk II						
1800i		03/85 → 10/88	●		—	VKD 35005 T	VKDP 33500 T
CAVALIER Mk II						
CAVALIER Mk II		09/81 → 08/88	●		—	VKD 35005 T	VKDP 33500 T
CAVALIER Mk II						
CAVALIER Mk II		09/81 → 08/88	●		—	VKD 35005 T	VKDP 33500 T
CAVALIER Mk III						
1.4 S, 1.6, 1.6 i, 1.8, 1.8 i CAT, 2.0 i, 2.0 i 16V, 2.0 i CAT, 2.0 SRi, 2.0 SRi 16V, 2.5 V6		09/88 → 11/95	●		VKDA 35501 T		VKDP 33500 T
1.7 D, 1.7 TD		09/88 → 11/95	●		VKDA 35501 T		VKDP 33500 T

4X4: CAVALIER Mk III		09/88 → 11/95		●		VKDA 35501 T		VKDP 33500 T
CAVALIER Mk III								
1.4 S, 1.6, 1.6 i, 1.8, 1.8 i CAT, 2.0 i, 2.0 i 16V, 2.0 i CAT, 2.0 SRi, 2.5 V6		09/88 → 11/95		●		VKDA 35501 T		VKDP 33500 T
1.7 D, 1.7 TD		09/88 → 11/95		●		VKDA 35501 T		VKDP 33500 T
4X4: CAVALIER Mk III		09/88 → 11/93		●		VKDA 35501 T		VKDP 33500 T
COMBO								
1.4, 1.6		10/01 → 01/05		●		VKDA 35509 T		
1.7 DI 16V, 1.7 DTI 16V		09/01 → 01/05		●		VKDA 35509 T		
CORSA Mk I								
CORSA Mk I		03/93 → 09/00		●		VKDA 35500 T		VKDP 33500 T
CORSA Mk I								
1.4 i 16V		01/98 → 09/04		●		VKDA 35500 T		
CORSA Mk II								
CORSA Mk II		09/00 → 01/05		●		VKDA 35508 T		—
CORSAVAN Mk I								
CORSAVAN Mk I		01/94 → 09/00		●		VKDA 35500 T		VKDP 33500 T
CORSAVAN Mk II								
CORSAVAN Mk II		09/00 → 01/05		●		VKDA 35508 T		—
MERIVA								
MERIVA		05/03 → 01/05		●		VKDA 35509 T		—
MOVANO								
MOVANO		10/98 → 01/05	IST	●		—		
OMEGA								
2.0	20 SE, X 20 SE	03/94 → 12/00	~~HD~~	●		VKDA 35510 T	VKD 35005 T	
2.2 16V	Y 22 XE, Z 22 XE	09/99 → 09/04		●		VKDA 35510 T	VKD 35005 T	
2.5 V6	X 25 XE	03/94 → 09/00	~~HD~~	●		VKDA 35511 T	VKD 35005 T	
2.6 V6, 3.2 V6	Y 26 SE, Y 32 SE	09/00 → 09/04		●		VKDA 35511 T	VKD 35005 T	
3.0 V6	X 30 XE	04/94 → 09/04	~~HD~~	●		VKDA 35511 T	VKD 35005 T	
2.0 16V	X 20 XEV	03/94 → 09/99	CH Y1000001	→, ~~HD~~	●		VKDA 35511 T	VKD 35005 T
2.0 16V	X 20 XEV	03/94 → 09/99	→	CH X1999999, R.H.D, ~~HD~~	●		VKDA 35510 T	VKD 35005 T
OMEGA		03/94 → 12/05	~~AAS~~	●				VKDP 33504 T
2.0 DTI 16V, 2.2 DTI 16V, 2.5 DTI 24V	X 20 DTH, Y 22 DTH, Y 25 DT	10/98 → 09/04		●		VKDA 35511 T	VKD 35005 T	
2.5 TD	U25TD, X25TD	04/94 → 02/01	~~HD~~	●		VKDA 35511 T	VKD 35005 T	
OMEGA								
2.0	X 20 SE	03/94 → 09/99	~~HD~~	●		VKDA 35510 T	VKD 35005 T	
2.2 16V	Y 22 XE, Z 22 XE	09/99 → 09/04		●		VKDA 35510 T	VKD 35005 T	
2.5 V6	X 25 XE	03/94 → 09/00	~~HD~~	●		VKDA 35511 T	VKD 35005 T	

VAUXHALL .../...

2.6 V6, 3.2 V6	Y 26 SE, Y 32 SE	09/00 → 09/04		●		VKDA 35511 T	VKD 35005 T	
3.0 V6	X 30 XE	04/94 → 09/04	~~HD~~	●		VKDA 35511 T	VKD 35005 T	
2.0 16V	X 20 XEV	03/94 → 09/99	CH Y1000001 →, ~~HD~~	●		VKDA 35511 T	VKD 35005 T	
2.0 16V	X 20 XEV	03/94 → 09/99	→| CH X1999999, R.H.D, ~~HD~~	●		VKDA 35510 T	VKD 35005 T	
OMEGA		03/94 → 12/05	~~AAS~~	●				VKDP 33504 T
2.0 DTI 16V, 2.2 DTI 16V, 2.5 DTI 24V	X 20 DTH, Y 22 DTH, Y 25 DT	10/98 → 09/04		●		VKDA 35511 T	VKD 35005 T	
2.5 TD	U25TD, X25TD	04/94 → 02/01	~~HD~~	●		VKDA 35511 T	VKD 35005 T	
SENATOR								
2.5 i, 2.6 i, 3.0, 3.0 i CAT	25 E, 30 NE, C 26 NE, C 30 LE, C 30 NE	09/87 → 09/93		●		VKDA 35510 T	VKD 35005 T	
3.0 24V	C 30 SE	09/89 → 09/93		●		VKDA 35511 T	VKD 35005 T	
TIGRA								
TIGRA		07/94 → 09/04		●		VKDA 35500 T		VKDP 33500 T
TIGRA TwinTop								
TIGRA TwinTop		06/04 → 01/05		●		VKDA 35508 T		
VECTRA Mk I								
1.6 i, 1.6 i 16V, 1.8 i 16V, 2.0 i 16V, 2.2 i 16V	X 16 SZR, X 16 XEL, X 18 XE, X 18 XE1, Y 16 XE, Z 16 XE, Z 18 XE	10/95 → 03/03		●		VKDA 35508 T		
1.6 i, 1.6 i 16V, 1.8 i 16V, 2.0 i 16V, 2.2 i 16V	X 16 SZR, X 16 XEL, X 18 XE, X 18 XE1, X 20 XEV, Y 16 XE, Z 16 XE, Z 18 XE, Z 22 SE	10/95 → 12/05	~~HD~~	●				VKDP 34500 T
2.0 i 16V, 2.2 i 16V, 2.5 i GSi, 2.5 i V6, 2.6 i V6	X 20 XEV, X 25 XE, Y 26 SE, Z 22 SE	10/95 → 03/03		●		VKDA 35509 T		
2.5 i GSi, 2.5 i V6, 2.6 i V6	X 25 XE, Y 26 SE	10/95 → 12/05	~~SPS~~, CH T1086824 →, ~~HD~~	●				VKDP 34500 T
1.7 TD	X 17 DT (TC4EE1)	10/95 → 11/96		●		VKDA 35508 T		
1.7 TD, 2.0 DI 16V, 2.0 DTI 16V	X 17 DT (TC4EE1), X 20 DTH, X 20 DTL, Y 20 DTH	10/95 → 12/05	~~HD~~	●				VKDP 34500 T
2.0 DI 16V, 2.0 DTI 16V, 2.2 DTI 16V	X 20 DTH, X 20 DTL, Y 20 DTH, Y 22 DTR	11/96 → 03/03		●		VKDA 35509 T		
2.2 DTI 16V	Y 22 DTR	09/00 → 12/05	~~SPS~~, CH T1086824 →, ~~HD~~	●				VKDP 34500 T
VECTRA Mk I								
1.6 i, 1.6 i 16V, 1.8 i 16V, 2.0 i 16V, 2.2 i 16V	X 16 SZR, X 16 XEL, X 18 XE, X 18 XE1, Y 16 XE, Z 16 XE, Z 18 XE	11/96 → 03/03		●		VKDA 35508 T		
1.6 i, 1.6 i 16V, 1.8 i 16V, 2.0 i 16V, 2.2 i 16V	X 16 SZR, X 16 XEL, X 18 XE, X 18 XE1, X 20 XEV, Y 16 XE,							

	Z 16 XE, Z 18 XE, Z 22 SE	11/96 → 12/05	~~HD~~	●				**VKDP 34500 T**
2.0 i 16V, 2.2 i 16V, 2.5 i GSi, 2.5 i V6, 2.6 i V6	X 20 XEV, X 25 XE, Y 26 SE, Z 22 SE	11/96 → 03/03		●		**VKDA 35509 T**		
2.5 i GSi, 2.5 i V6, 2.6 i V6	X 25 XE, Y 26 SE	11/96 → 12/05	~~SPS~~, CH T1086824 →, ~~HD~~	●				**VKDP 34500 T**
2.0 DI 16V, 2.0 DTI 16V, 2.2 DTI 16V	X 20 DTH, X 20 DTL, Y 20 DTH, Y 22 DTR	11/96 → 03/03		●		**VKDA 35509 T**		
2.0 DI 16V, 2.0 DTI 16V	X 20 DTH, X 20 DTL, Y 20 DTH	11/96 → 12/05	~~HD~~	●				**VKDP 34500 T**
2.2 DTI 16V	Y 22 DTR	09/00 → 12/05	~~SPS~~, CH T1086824 →, ~~HD~~	●				**VKDP 34500 T**
VECTRA Mk I								
1.6 i, 1.6 i 16V, 1.8 i 16V	X 16 SZR, X 16 XEL, X 18 XE, X 18 XE1, Y 16 XE, Z 16 XE, Z 18 XE	10/95 → 03/03		●		**VKDA 35508 T**		
1.6 i, 1.6 i 16V, 1.8 i 16V, 2.0 i 16V, 2.2 i 16V	X 16 SZR, X 16 XEL, X 18 XE, X 18 XE1, X 20 XEV, Y 16 XE, Z 16 XE, Z 18 XE, Z 22 SE	10/95 → 12/05	~~HD~~	●				**VKDP 34500 T**
2.0 i 16V, 2.2 i 16V, 2.5 i GSi, 2.5 i V6, 2.6 i V6	X 20 XEV, X 25 XE, Y 26 SE, Z 22 SE	10/95 → 03/03		●		**VKDA 35509 T**		
2.5 i GSi, 2.5 i V6, 2.6 i V6	X 25 XE, Y 26 SE	10/95 → 12/05	~~SPS~~, CH T1086824 →, ~~HD~~	●				**VKDP 34500 T**
1.7 TD	X 17 DT (TC4EE1)	10/95 → 11/96		●		**VKDA 35508 T**		
1.7 TD, 2.0 Di 16V, 2.0 DTi 16V	X 17 DT (TC4EE1), X 20 DTH, X 20 DTL, Y 20 DTH	10/95 → 12/05	~~HD~~	●				**VKDP 34500 T**
2.0 Di 16V, 2.0 DTi 16V, 2.2 DTI 16V	X 20 DTH, X 20 DTL, Y 20 DTH, Y 22 DTR	11/96 → 03/03		●		**VKDA 35509 T**		
2.2 DTI 16V	Y 22 DTR	09/00 → 12/05	~~SPS~~, CH T1086824 →, ~~HD~~	●				**VKDP 34500 T**
VECTRA Mk II								
1.8 16V, 1.8 16V Dualfuel, 2.0 16V Turbo, 2.2 16V, 2.2 direct, 3.2 V6	Z 22 YH	04/02 → 09/04	SPS	●		—		
1.8 16V, 1.8 16V Dualfuel, 2.0 16V Turbo, 2.2 16V, 2.2 direct, 3.2 V6	Z 22 YH	04/02 → 09/04	→I CH 41048789, 48045597, ~~SPS~~	●		VKDA____		
1.9 CDTI, 1.9 CDTI 16V, 2.0 DTI 16V, 2.2 DTI 16V	Z 19 DTH	04/02 → 09/04	SPS	●		—		
3.0 V6 CDTI		06/03 → 09/04		●		—		
1.9 CDTI, 1.9 CDTI 16V, 2.0 DTI 16V, 2.2 DTI 16V	Z 19 DTH	04/02 → 09/04	→I CH 41048789, 48045597, ~~SPS~~	●		VKDA____		
VECTRA Mk II								
1.8 16V, 2.0 16V Turbo, 2.2 direct, 3.2 V6		10/03 → 09/04	SPS	●		—		
1.9 CDTI, 1.9 CDTI 16V, 2.0 DTI 16V, 2.2 DTI 16V		10/03 → 09/04	SPS	●		—		

VAUXHALL .../...								
3.0 V6 CDTI		10/03 → 09/04			●		—	
VECTRA Mk II GTS								
1.8 16V, 1.8 16V Dualfuel, 2.0 16V Turbo, 2.2 16V, 2.2 direct, 3.2 V6	Z 22 YH	04/02 → 09/04	SPS		●		—	
1.8 16V, 1.8 16V Dualfuel, 2.0 16V Turbo, 2.2 16V, 2.2 direct, 3.2 V6	Z 22 YH	04/02 → 09/04	→| CH 41048789, 48045597, ~~SPS~~		●		VKDA____	
1.9 CDTI, 1.9 CDTI 16V, 2.0 DTI 16V, 2.2 DTI 16V	Z 19 DTH	04/02 → 09/04	SPS		●		—	
3.0 V6 CDTI		06/03 → 09/04			●		—	
1.9 CDTI, 1.9 CDTI 16V, 2.0 DTI 16V, 2.2 DTI 16V	Z 19 DTH	04/02 → 09/04	→| CH 41048789, 48045597, ~~SPS~~		●		VKDA____	
VIVARO								
VIVARO		08/01 → 05/06			●		**VKDA 35622 T**	
VX Mk II								
VX Mk II		09/00 → 01/05	IST		●		—	
ZAFIRA								
ZAFIRA		04/99 → 09/04			●		**VKDA 35508 T**		**VKDP 34500 T**
VOLVO								
240								
240		08/74 → 08/93			●		**VKDC 35611 T**	
240								
240		08/74 → 08/93			●		**VKDC 35611 T**	
260								
260		08/74 → 07/82			●		**VKDC 35611 T**	
340-360								
340-360		08/75 → 07/91			●		—	**VKD 35012 T**	**VKDP 33603 T**
440								
440		08/88 → 12/96			●		—	**VKD 35001 T**	**VKDP 33605 T**
460								
460		09/88 → 07/96			●		—	**VKD 35001 T**	**VKDP 33605 T**

480						
480	04/86 → 07/96	●		—	**VKD 35001 T**	**VKDP 33605 T**
740						
2.0, 2.3, 2.3 Turbo	01/88 → 08/92	●		**VKDA 35608 T**	**VKD 35032 T**	**VKDP 33600 T**
2.4 Diesel, 2.4 TD	01/88 → 07/92	●		**VKDA 35608 T**	**VKD 35032 T**	**VKDP 33600 T**
740						
2.0, 2.3, 2.3 Turbo	08/85 → 08/92	●				**VKDP 33600 T**
2.0, 2.3, 2.3 Turbo	01/88 → 08/92	●		**VKDA 35608 T**	**VKD 35032 T**	
2.4 Diesel, 2.4 TD Interc., 2.4 Turbo-Diesel	01/88 → 07/92	●		**VKDA 35608 T**	**VKD 35032 T**	**VKDP 33600 T**
760						
2.3, 2.3 Turbo, 2.8	01/88 → 07/92	●		**VKDA 35608 T**	**VKD 35032 T**	**VKDP 33600 T**
2.4, 2.4 TD Interc., 2.4 Turbo Diesel	01/88 → 07/92	●		**VKDA 35608 T**	**VKD 35032 T**	**VKDP 33600 T**
760						
2.3 Turbo, 2.8	01/88 → 08/91	●		**VKDA 35608 T**	**VKD 35032 T**	**VKDP 33600 T**
2.4, 2.4 TD Interc.	01/88 → 07/92	●		**VKDA 35608 T**	**VKD 35032 T**	**VKDP 33600 T**
780 Bertone						
780 Bertone	08/86 → 07/90	●				**VKDP 33600 T**
850						
850	06/91 → 12/96	●		**VKDC 35634 T**		
2.0, 2.0 Turbo, 2.3 T5, 2.5	06/91 → 12/96 ~~AAS~~	●				**VKDP 33500 T**
2.5 TDI	08/95 → 12/96 ~~AAS~~	●				**VKDP 33500 T**
2.0, 2.0 Turbo, 2.3 T5, 2.3 T5-R, 2.5	06/91 → 12/96 ~~AAS~~, FWD		○	**VKDA 40610 T**		
2.0, 2.0 Turbo, 2.3 T5, 2.3 T5-R, 2.5	06/91 → 12/96 AAS, FWD		○	***VKDA 40611 T***		
2.5 TDI	08/95 → 12/96 ~~AAS~~, FWD		○	**VKDA 40610 T**		
2.5 TDI	08/95 → 12/96 AAS, FWD		○	***VKDA 40611 T***		
850						
2.0, 2.0 Turbo, 2.3 T5, 2.3 T5-R, 2.5	08/92 → 12/96	●		**VKDC 35634 T**		
2.0, 2.0 Turbo, 2.3 T5, 2.5	08/92 → 12/96 ~~AAS~~	●				**VKDP 33500 T**
2.5 TDI	08/95 → 12/96	●		**VKDC 35634 T**		
2.5 TDI	08/95 → 12/96 ~~AAS~~	●				**VKDP 33500 T**
AWD: 2.5	04/96 → 12/96	●		**VKDC 35634 T**		
AWD: 2.5	04/96 → 12/96 ~~AAS~~	●				**VKDP 33500 T**
2.0, 2.0 Turbo, 2.3 T5, 2.3 T5-R, 2.5	08/92 → 12/96 ~~AAS~~, FWD		○	**VKDA 40610 T**		
2.0, 2.0 Turbo, 2.3 T5, 2.3 T5-R, 2.5	08/92 → 12/96 AAS, FWD		○	***VKDA 40611 T***		
2.5 TDI	08/95 → 12/96 ~~AAS~~, FWD		○	**VKDA 40610 T**		
2.5 TDI	08/95 → 12/96 AAS, FWD		○	***VKDA 40611 T***		
940 I						
940 I	08/90 → 10/98	●		**VKDA 35608 T**	**VKD 35032 T**	**VKDP 33600 T**

VOLVO .../...						
940 I						
940 I 08/90 → 07/95	●		**VKDA 35608 T**	**VKD 35032 T**	**VKDP 33600 T**
940 II						
940 II 08/94 → 10/98	●		**VKDA 35608 T**	**VKD 35032 T**	**VKDP 33600 T**
940 II						
940 II 08/94 → 10/98	●		**VKDA 35608 T**	**VKD 35032 T**	**VKDP 33600 T**
960 I						
960 I 08/90 → 07/94	●		**VKDA 35608 T**	**VKD 35032 T**	**VKDP 33600 T**
960 I						
960 I 08/90 → 07/94	●		**VKDA 35608 T**	**VKD 35032 T**	
2.0 08/90 → 09/93	●				**VKDP 33600 T**
2.9 08/90 → 07/94 →| CH R.018099	●				**VKDP 33600 T**
2.4 TD Interc. 09/91 → 07/94 →| CH R.018099	●				**VKDP 33600 T**
960 II						
960 II 07/94 → 12/96	●		**VKDA 35608 T**	**VKD 35032 T**	**VKDP 33600 T**
960 II						
960 II 08/94 → 12/96	●		**VKDA 35608 T**	**VKD 35032 T**	**VKDP 33600 T**
S40 I						
1.6, 1.8, 1.8 i, 1.9 T4, 2.0, 2.0 T 07/95 → 08/99	●		**VKDC 35613 T**		
1.6, 1.8, 1.8 i 03/98 → 05/01 Mot. 495474 →|	●		VKDA____		**VKDP 33601 T**
1.6, 1.8, 1.8 i, 1.9 T4, 2.0, 2.0 T, 2.0 T4 09/99 → 05/03 →| CH 495473	●		VKDA____		**VKDP 33601 T**
1.6, 1.8, 1.8 i, 2.0, 2.0 T, 2.0 T4 06/01 → 05/03 Man. GBX	●		—	**VKD 35013 T**	**VKDP 33601 T**
1.6, 1.8, 1.8 i, 2.0, 2.0 T, 2.0 T4 06/01 → 05/03 Auto. GBX	●		***VKDA 35630 T***		**VKDP 33601 T**
1.9 T4, 2.0 T 05/97 → 06/01 CH 495474 →|	●		VKDA____		**VKDP 33601 T**
2.0, 2.0 T4 07/95 → 05/01 Mot. 495474 →|	●		VKDA____		**VKDP 33601 T**
1.9 DI, 1.9 TD 07/95 → 08/99	●		**VKDC 35613 T**		**VKDP 33601 T**
1.9 DI 03/99 → 07/00 CH 495474 →|	●		VKDA____		**VKDP 33601 T**
1.9 DI 09/99 → 05/03 →| CH 495473	●		VKDA____		**VKDP 33601 T**
1.9 DI 07/00 → 05/01 Mot. 495474 →|	●		VKDA____		**VKDP 33601 T**
1.9 DI 06/01 → 05/03 Man. GBX	●		—	**VKD 35013 T**	**VKDP 33601 T**
1.9 DI 06/01 → 05/03 Auto. GBX	●		***VKDA 35630 T***		**VKDP 33601 T**
1.6, 1.8, 1.8 i, 1.9 T4, 2.0, 2.0 T, 2.0 T4 07/95 → 05/03 ~~AAS~~		○	***VKDA 40614 T***		VKDP____
1.6, 1.8, 1.8 i, 1.9 T4, 2.0, 2.0 T, 2.0 T4 07/95 → 05/03 AAS		○	—		
1.9 DI, 1.9 TD 07/95 → 05/03 ~~AAS~~		○	***VKDA 40614 T***		VKDP____
1.9 DI, 1.9 TD 07/95 → 05/03 AAS		○	—		
V40						
1.6, 1.8, 1.8 i, 1.9 T4, 2.0, 2.0 T 07/95 → 08/99	●		**VKDC 35613 T**		
1.6, 1.8, 1.8 i, 1.9 T4, 2.0, 2.0 T, 2.0 T4 07/95 → 05/01 CH 495474 →|	●		VKDA____		**VKDP 33601 T**

1.6, 1.8, 1.8 i, 1.9 T4, 2.0, 2.0 T, 2.0 T4	09/99 → 05/03	→| CH 495473	●		VKDA____		**VKDP 33601 T**
1.6, 1.8, 1.8 i, 2.0, 2.0 T, 2.0 T4	06/01 → 05/03	Man. GBX	●		—	**VKD 35013 T**	**VKDP 33601 T**
1.6, 1.8, 1.8 i, 2.0, 2.0 T, 2.0 T4	06/01 → 05/03	Auto. GBX	●		***VKDA 35630 T***		**VKDP 33601 T**
2.0 T	07/00 → 06/01	CH 495474 |→	●		VKDA____		**VKDP 33601 T**
1.9 DI, 1.9 TD	07/95 → 08/99		●		**VKDC 35613 T**		**VKDP 33601 T**
1.9 DI	03/99 → 05/01	CH 495474 |→	●		VKDA____		
1.9 DI	09/99 → 05/03	→| CH 495473	●		VKDA____		**VKDP 33601 T**
1.9 DI	06/01 → 05/03	Man. GBX	●		—	**VKD 35013 T**	**VKDP 33601 T**
1.9 DI	06/01 → 05/03	Auto. GBX	●		***VKDA 35630 T***		**VKDP 33601 T**
1.6, 1.8, 1.8 i, 1.9 T4, 2.0, 2.0 T, 2.0 T4	07/95 → 05/03	~~AAS~~		○	***VKDA 40614 T***		VKDP____
1.6, 1.8, 1.8 i, 1.9 T4, 2.0, 2.0 T, 2.0 T4	07/95 → 05/03	AAS		○	—		
1.9 DI, 1.9 TD	07/95 → 05/03	~~AAS~~		○	***VKDA 40614 T***		VKDP____
1.9 DI, 1.9 TD	07/95 → 05/03	AAS		○	—		
S40 II							
S40 II	01/04 → 02/06		●		—	**VKD 35035 T**	
AWD: T5	04/04 → 02/06		●		—	**VKD 35035 T**	
V50							
V50	04/04 → 02/06		●		—	**VKD 35035 T**	
AWD: T5	04/04 → 02/06		●		—	**VKD 35035 T**	
S70							
S70	01/97 → 11/00		●		**VKDC 35634 T**		**VKDP 33500 T**
2.0, 2.0 Turbo, 2.3 T-5, 2.3 Turbo, 2.4, 2.4 Turbo, 2.5, 2.5 Bifuel	01/97 → 11/00	~~AAS~~, FWD		○	**VKDA 40610 T**		
2.0, 2.0 Turbo, 2.3 T-5, 2.3 Turbo, 2.4, 2.4 Turbo, 2.5, 2.5 Bifuel	01/97 → 11/00	AAS, FWD		○	***VKDA 40611 T***		
2.5 TDI	01/97 → 11/00	~~AAS~~, FWD		○	**VKDA 40610 T**		
2.5 TDI	01/97 → 11/00	AAS, FWD		○	***VKDA 40611 T***		
V70 I							
2.0, 2.0 Turbo, 2.3 T-5, 2.3 Turbo, 2.4, 2.4 Bifuel, 2.4 Turbo, 2.5, 2.5 Bifuel	01/97 → 05/00		●		**VKDC 35634 T**		**VKDP 33500 T**
2.5 TDI	01/97 → 05/00		●		**VKDC 35634 T**		**VKDP 33500 T**
AWD: V70 I	01/97 → 05/00		●		**VKDC 35634 T**		**VKDP 33500 T**
2.0, 2.0 Turbo, 2.3 T-5, 2.3 Turbo, 2.4, 2.4 Bifuel, 2.4 Turbo, 2.5, 2.5 Bifuel	01/97 → 05/00	~~AAS~~, FWD		○	**VKDA 40610 T**		
2.0, 2.0 Turbo, 2.3 T-5, 2.3 Turbo, 2.4, 2.4 Bifuel, 2.4 Turbo, 2.5, 2.5 Bifuel	01/97 → 05/00	AAS, FWD		○	***VKDA 40611 T***		
2.5 TDI	01/97 → 05/00	~~AAS~~, FWD		○	**VKDA 40610 T**		
2.5 TDI	01/97 → 05/00	AAS, FWD		○	***VKDA 40611 T***		
C70							
C70	03/97 → 09/02		●		**VKDC 35634 T**		**VKDP 33500 T**
C70	03/97 → 09/02	~~AAS~~, FWD		○	**VKDA 40610 T**		
C70	03/97 → 09/02	AAS, FWD		○	***VKDA 40611 T***		
C70							
C70	03/98 → 02/06		●		**VKDC 35634 T**		

VOLVO .../...					
C70 ..... 03/98 → 02/06 .... ~~AAS~~, FWD		○	**VKDA 40610 T**		
C70 ..... 03/98 → 02/06 .... AAS, FWD		○	***VKDA 40611 T***		
S60					
2.0 T, T5, 2.4, 2.4 Bifuel, 2.4 T, 2.4 T5, 2.5 T ..... 11/00 → 02/06	●		**VKDC 35627 T**		
2.0 T, T5, 2.4, 2.4 Bifuel, 2.4 T, 2.5 T ..... 11/00 → 02/06	●				VKDP_____
2.4 D, 2.4 D5 ..... 07/01 → 02/06	●		**VKDC 35627 T**		VKDP_____
AWD: S60 ..... 11/01 → 02/06	●		**VKDC 35627 T**		
AWD: 2.4 T, R 2, 5 T ..... 11/01 → 02/06	●				VKDP_____
S60 ..... 11/00 → 02/06 .... ~~AAS~~, FWD		○	**VKDA 40616 T**		
V70 II					
2.0 T, 2.3 T5, 2.4, 2.4 Bifuel, 2.4 T, 2.4 T5, 2.5 T ..... 03/00 → 02/06 .... →| CH 28004, 33857	●		**VKDC 35634 T**		
2.0 T, 2.3 T5, 2.4, 2.4 Bifuel, 2.4 T, 2.4 T5, 2.5 T ..... 03/00 → 02/06 .... CH 28005, 33858 |→	●		**VKDC 35627 T**		
2.4 D, 2.4 D5, 2.5 TDI ..... 03/00 → 02/06 .... →| CH 28004, 33857	●		**VKDC 35634 T**		
2.4 D, 2.4 D5, 2.5 TDI ..... 03/00 → 02/06 .... CH 28005, 33858 |→	●		**VKDC 35627 T**		
AWD: 2.4 T, 2.5 T ..... 09/01 → 02/06 .... →| CH 28004, 33857	●		**VKDC 35634 T**		
AWD: 2.4 T, 2.5 T ..... 09/01 → 02/06 .... CH 28005, 33858 |→	●		**VKDC 35627 T**		
AWD: R 2, 5 T ..... 03/03 → 02/06	●		**VKDC 35627 T**		
AWD: 2.4 D5 ..... 03/03 → 02/06 .... →| CH 28004, 33857	●		**VKDC 35634 T**		
AWD: 2.4 D5 ..... 03/03 → 02/06 .... CH 28005, 33858 |→	●		**VKDC 35627 T**		
V70 II ..... 03/00 → 02/06 .... ~~AAS~~, FWD		○	**VKDA 40616 T**		
AWD: V70 II ..... 09/01 → 02/06 .... ~~AAS~~		○	—		
S80					
2.0, 2.0 T, 2.4, 2.4 Bifuel, 2.4 T, 2.5 T, 2.8 T6, 2.9, 3.0, 3.0 T6 ..... 05/98 → 02/06 .... →| CH 153439	●		**VKDC 35634 T**		
2.0, 2.0 T, 2.4, 2.4 Bifuel, 2.4 T, 2.5 T, 2.8 T6, 2.9, 3.0, 3.0 T6 ..... 05/98 → 02/06 .... CH 153440 |→	●		**VKDC 35627 T**		
2.4 D, 2.4 D5, 2.5 TDI ..... 01/99 → 02/06 .... →| CH 153439	●		**VKDC 35634 T**		
2.4 D, 2.4 D5, 2.5 TDI ..... 01/99 → 02/06 .... CH 153440 |→	●		**VKDC 35627 T**		
AWD: 2.5 T ..... 07/03 → 02/06 .... →| CH 153439	●		**VKDC 35634 T**		
AWD: 2.5 T ..... 07/03 → 02/06 .... CH 153440 |→	●		**VKDC 35627 T**		
S80 ..... 05/98 → 02/06 .... ~~AAS~~		○	**VKDA 40616 T**		
V90					
V90 ..... 01/97 → 12/98	●		**VKDA 35608 T**	**VKD 35032 T**	
S90					
S90 ..... 01/97 → 05/98	●		**VKDA 35608 T**	**VKD 35032 T**	
XC70 CROSS COUNTRY					
AWD: XC70 CROSS COUNTRY ..... 03/00 → 02/06	●		**VKDC 35627 T**		

VW

BORA (1J2)

1.4 16V, 1.6, 1.6 16V, 1.6 FSI, 1.8, 1.8 T, 2.0, 2.3 V5	10/98 → 11/05		●		**VKDA 35113 T**	**VKDP 33101 T**
1.9 SDI, 1.9 TDI	10/98 → 11/05		●		**VKDA 35113 T**	**VKDP 33101 T**
4MOTION: 1.8, 2.0, 2.3 V5, 2.8 V6	12/98 → 11/05		●		**VKDA 35113 T**	
4MOTION: 1.8, 2.0, 2.3 V5, 2.8 V6	12/98 → 02/06	~~SPS~~, →| CH 1J-X-999 000, ~~HD~~	●			**VKDP 33101 T**
4MOTION: 1.9 TDI	02/99 → 11/05		●		**VKDA 35113 T**	
4MOTION: 1.9 TDI	02/99 → 02/06	~~SPS~~, →| CH 1J-X-999 000, ~~HD~~	●			**VKDP 33101 T**
1.4 16V, 1.6, 1.6 16V, 1.6 FSI, 1.8, 1.8 T, 2.0, 2.3 V5	10/98 → 11/05	24), 25), FWD		○	**VKDA 40104 T**	
1.4 16V, 1.6, 1.6 16V, 1.6 FSI, 1.8, 1.8 T, 2.0, 2.3 V5	10/98 → 11/05	CH 1J-Y-530 001 →|, FWD		○	***VKDA 40123 T***	
1.4 16V, 1.6, 1.6 16V, 1.6 FSI, 1.8 T, 2.3 V5	03/00 → 11/05	→| CH 1J-Y-530 000, FWD		○	**VKDA 40104 T**	
1.6, 1.8, 2.0, 2.3 V5	10/98 → 12/99	22), 26), →| CH 1J-Y-530 000, FWD		○	**VKDA 40104 T**	
BORA (1J2)	10/98 → 02/06	FWD		○		**VKDP 43106 T**
1.9 SDI, 1.9 TDI	10/98 → 11/05	24), 25), FWD		○	**VKDA 40104 T**	
1.9 SDI, 1.9 TDI	10/98 → 12/99	22), 26), →| CH 1J-Y-530 000, FWD		○	**VKDA 40104 T**	
1.9 SDI, 1.9 TDI	10/98 → 11/05	CH 1J-Y-530 001 →|, FWD		○	***VKDA 40123 T***	
1.9 TDI	05/00 → 11/05	→| CH 1J-Y-530 000, FWD		○	**VKDA 40104 T**	

BORA (1J6)

1.4 16V, 1.6, 1.6 16V, 1.6 FSI, 1.8, 1.8 T, 2.0, 2.3 V5	10/98 → 11/05		●		**VKDA 35113 T**	
BORA (1J6)	10/98 → 02/06	~~SPS~~, FWD	●			**VKDP 33101 T**
1.9 TDI	05/99 → 11/05		●		**VKDA 35113 T**	
4MOTION: 1.8, 2.0, 2.3 V5, 2.8 V6	05/99 → 11/05		●		**VKDA 35113 T**	
4MOTION: 1.9 TDI	05/99 → 11/05		●		**VKDA 35113 T**	
BORA (1J6)	10/98 → 11/05	FWD		○	***VKDA 40123 T***	
BORA (1J6)	10/98 → 02/06	~~SPS~~, FWD		○		**VKDP 43106 T**

CADDY I

CADDY I	08/82 → 07/92		●			**VKDP 33100 T**

CADDY II

CADDY II	11/95 → 01/04		●		**VKDA 35110 T**	

CADDY II Pickup

CADDY II Pickup	06/96 → 12/00		●		**VKDA 35112 T**	**VKDP 33100 T**

VW .../...						
CADDY II						
CADDY II ... 11/95 → 01/04	●		**VKDA 35110 T**			
CADDY III						
CADDY III ... 03/04 → 11/05	●		**VKDA 35122 T**	**VKD 35025 T**		
CADDY III						
CADDY III ... 03/04 → 11/05	●		**VKDA 35122 T**	**VKD 35025 T**		
CORRADO						
1.8 16V, 1.8 G60 ... 04/89 → 09/93	●		**VKDC 35101 T**			**VKDP 33100 T**
2.0 i, 2.0 i 16V ... 08/91 → 07/94	●		**VKDC 35101 T**			**VKDP 33100 T**
2.0 i, 2.0 i 16V ... 08/94 → 12/95	●		**VKDA 35110 T**			**VKDP 33100 T**
2.9 VR6 ... 08/91 → 12/95	●		**VKDA 35110 T**			
CORRADO ... 09/88 → 12/95		○	**VKDA 40101 T**			
1.8 16V, 1.8 G60, 2.0 i, 2.0 i 16V ... 09/88 → 12/95		○				**VKDP 43102 T**
DERBY						
0.9, 1.0, 1.1, 1.3 ... 02/77 → 12/84	●		**VKDC 35103 T**			**VKDP 33102 T**
DERBY ... 02/77 → 12/84		○	**VKDA 40102 T**			**VKDP 43102 T**
GOLF I						
GOLF I ... 06/77 → 12/83	●		**VKDC 35105 T**			**VKDP 33100 T**
GOLF I ... 04/74 → 12/83		○	—			**VKDP 43101 T**
GOLF I						
GOLF I ... 01/79 → 04/93	●		**VKDC 35105 T**			**VKDP 33100 T**
GOLF I ... 01/79 → 04/93		○	—			**VKDP 43101 T**
GOLF II						
1.0, 1.3, 1.3 CAT, 1.6 ... 08/83 → 12/92	●		**VKDC 35102 T**			**VKDP 33100 T**
1.8, 1.8 GTI, 1.8 GTI 16V, 1.8 GTI CAT, 1.8 i CAT ... 08/83 → 10/91	●		**VKDC 35102 T**			**VKDP 33100 T**
1.8 GTI G60 ... 04/90 → 07/91	●		**VKDC 35101 T**			
1.6 D, 1.6 TD ... 08/83 → 10/91	●		**VKDC 35102 T**			**VKDP 33100 T**
SYNCRO: 1.8, 1.8 i CAT ... 02/86 → 10/91	●		**VKDC 35102 T**			
SYNCRO: 1.8 ... 02/86 → 07/91 ~~HD~~	●					**VKDP 33100 T**
SYNCRO: 1.8 i CAT ... 08/87 → 10/91	●					**VKDP 33100 T**
SYNCRO: 1.8 GTI G60 ... 08/88 → 07/91	●		**VKDC 35101 T**			
GOLF II ... 08/83 → 12/92 ... CH 19-E-300 001 |→		○	**VKDA 40101 T**			**VKDP 43100 T**
SYNCRO: GOLF II ... 02/86 → 10/91 ... CH 19-E-300 001 |→		○	**VKDA 40101 T**			
GOLF III						
1.4 ... ABD ... 10/91 → 06/95	●		**VKDC 35102 T**			
1.4, 1.6, 1.8, 2.0 ... 2E, AAM, ABD, ABS, ABU, ADY, ADZ, AEA, AEE, AEX, AGG, AKR. 10/91 → 08/97 ... →| CH 1H-SB019475, 1H-SW062538	●					**VKDP 33108 T**
1.4 ... ABD, AEX ... 07/95 → 08/97	●		**VKDA 35110 T**			
1.6 ... ABU ... 09/92 → 06/95	●		**VKDC 35102 T**			
1.6 ... ABU, AEA, AEE, AEK, AFT, AKS ... 07/95 → 08/97	●		**VKDA 35110 T**			
1.8 ... ABS ... 11/91 → 06/95	●		**VKDC 35101 T**			

1.8	AAM	11/91 → 06/95		●		VKDC 35102 T		
1.8	AAM, ABS, ADZ	07/95 → 08/97		●		VKDA 35110 T		
2.0	2E	11/91 → 06/95		●		VKDA 35110 T		
2.0 GTI 16V, 2.8 VR6	AAA, ABF	01/92 → 08/97		●		VKDA 35110 T		
2.0	2E, ADY, AGG, AKR	07/95 → 08/97		●		VKDA 35110 T		
1.9 D, 1.9 TD, GTD, 1.9 TDI	1Y, 1Z, AAZ	11/91 → 06/95		●		VKDC 35101 T		
1.9 D, 1.9 TD, GTD, 1.9 TDI	1Y, 1Z, AAZ, AHU, ALE	11/91 → 08/97	→| CH 1H-SB019475, 1H-SW062538	●				VKDP 33108 T
1.9 D, 1.9 SDI, 1.9 TD, GTD, 1.9 TDI	1Y, 1Z, AAZ, AEY, AFN, AHU, ALE	07/95 → 08/97		●		VKDA 35110 T		
SYNCRO: 1.8	ABS, ADZ	01/93 → 06/95		●		VKDC 35101 T		
SYNCRO: 1.8, 2.0, 2.9 VR6	ABS, ABV, ADZ, AGG	01/93 → 08/97	CH 1H-S-062539, 1H-SW062538 |→	●				VKDP 33100 T
SYNCRO: 1.8	ABS, ADZ	07/95 → 08/97		●		VKDA 35110 T		
SYNCRO: 2.0, 2.9 VR6	ABV, AGG	10/94 → 08/97		●		VKDA 35110 T		
SYNCRO: 1.9 TDI	1Z, AHU, ALE	08/95 → 08/97		●		VKDA 35110 T		
SYNCRO: 1.9 TDI	1Z, AHU, ALE	08/95 → 08/97	CH 1H-S-062539, 1H-SW062538 |→	●				VKDP 33100 T
1.4, 1.6, 1.8, 2.0, 2.0 GTI 16V, 2.8 VR6	2E, AAA, AAM, ABD, ABF, ABS, ABU, ADY, ADZ, AEA, AEE, AEK, AEX, AFT, AGG, AKR, AKS	10/91 → 08/97			○	VKDA 40101 T		VKDP 43100 T
1.9 D, 1.9 SDI, 1.9 TD, GTD, 1.9 TDI	1Y, 1Z, AAZ, AEY, AFN, AHU, ALE	11/91 → 08/97			○	VKDA 40101 T		VKDP 43100 T
SYNCRO: 1.8, 2.0, 2.9 VR6	ABS, ABV, ADZ, AGG	01/93 → 08/97			○	VKDA 40101 T		
SYNCRO: 1.9 TDI	1Z, AHU, ALE	08/95 → 08/97			○	VKDA 40101 T		

GOLF III

GOLF III		07/93 → 05/98		●		VKDA 35110 T		VKDP 33100 T
GOLF III		07/93 → 05/98			○	VKDA 40101 T		VKDP 43100 T

GOLF III Variant

1.4		07/93 → 06/95		●		VKDA 35110 T		
1.4		07/93 → 06/95		●		VKDC 35102 T		
1.4, 1.6, 1.8, 2.0		07/93 → 04/99	→| CH 1H-SB019474, 1H-SW062538	●				VKDP 33108 T
1.4		07/95 → 04/99		●		VKDA 35110 T		
1.6		07/93 → 06/95		●		VKDC 35102 T		
1.6		07/95 → 04/99		●		VKDA 35110 T		
1.8		07/93 → 06/95	Man. GBX, ~~AC~~	●		VKDC 35102 T		
1.8		07/93 → 06/95	Man. GBX, AC	●		VKDC 35101 T		
1.8		07/95 → 04/99		●		VKDA 35110 T		
2.0		07/93 → 06/95		●		VKDA 35110 T		
2.0, 2.9 VR6		07/95 → 04/99		●		VKDA 35110 T		
1.9 D, 1.9 TD		07/93 → 06/95		●		VKDC 35101 T		
1.9 D, 1.9 TD, 1.9 TDI		07/93 → 04/99	→| CH 1H-SB019474, 1H-SW062538	●				VKDP 33108 T
1.9 TDI		03/94 → 06/95		●		VKDA 35110 T		
1.9 D, 1.9 SDI, 1.9 TD, 1.9 TDI		07/95 → 04/99		●		VKDA 35110 T		
SYNCRO: 1.8, 2.0, 2.9 VR6		07/95 → 04/99		●		VKDA 35110 T		
SYNCRO: 1.9 TDI		07/95 → 04/99		●		VKDA 35110 T		
1.4, 1.6, 1.8, 2.0, 2.9 VR6		07/93 → 04/99			○	VKDA 40101 T		
1.4, 1.6, 1.8, 2.0, 2.9 VR6		07/93 → 04/99	~~HD~~		○			VKDP 44100 T
1.9 D, 1.9 SDI, 1.9 TD, 1.9 TDI		07/93 → 04/99			○	VKDA 40101 T		
1.9 D, 1.9 SDI, 1.9 TD, 1.9 TDI		07/93 → 04/99	~~HD~~		○			VKDP 44100 T
SYNCRO: 1.8, 2.0, 2.9 VR6		10/94 → 04/99			○	VKDA 40101 T		
SYNCRO: 1.8, 2.0, 2.9 VR6		10/94 → 04/99	~~HD~~		○			VKDP 44100 T
SYNCRO: 1.9 TDI		07/95 → 04/99			○	VKDA 40101 T		

VW .../...						
SYNCRO: 1.9 TDI ..... 07/95 → 04/99 .... ~~HD~~		○				**VKDP 44100 T**
GOLF IV						
1.4 16V, 1.6, 1.6 16V, 1.6 FSI, 1.8, 1.8 T, 1.8 T GTI, 2.0, 2.3 V5 ..... 08/97 → 11/05	●		**VKDA 35113 T**			**VKDP 33101 T**
1.9 SDI, 1.9 TDI ..... 08/97 → 11/05	●		**VKDA 35113 T**			**VKDP 33101 T**
4MOTION: 1.8, 2.0, 2.3 V5, 2.8 V6, 3.2 R32 ..... 05/98 → 11/05	●		**VKDA 35113 T**			
4MOTION: 1.8, 2.0, 2.3 V5, 2.8 V6 ..... 05/98 → 02/06 .... →| CH 1J-X-800 000	●					**VKDP 33101 T**
4MOTION: 1.9 TDI ..... 04/98 → 11/05	●		**VKDA 35113 T**			
4MOTION: 1.9 TDI ..... 04/98 → 02/06 .... →| CH 1J-X-800 000	●					**VKDP 33101 T**
1.4 16V, 1.6, 1.6 16V, 1.6 FSI, 1.8, 1.8 T, 1.8 T GTI, 2.0, 2.3 V5 ..... 08/97 → 11/05 .... 27), 24), 25), 28), FWD ...		○	**VKDA 40104 T**			**VKDP 43106 T**
1.4 16V, 1.6, 1.6 16V, 1.6 FSI, 1.8, 1.8 T, 1.8 T GTI, 2.0, 2.3 V5 ..... 08/97 → 11/05 .... 22), 26), →| CH 1J-Y-500 000, FWD		○	**VKDA 40104 T**			**VKDP 43106 T**
1.4 16V, 1.6, 1.6 16V, 1.6 FSI, 1.8, 1.8 T, 1.8 T GTI, 2.0, 2.3 V5 ..... 08/97 → 11/05 .... 29), 30), 31), FWD		○	***VKDA 40123 T***			**VKDP 43106 T**
1.4 16V, 1.6, 1.6 16V, 1.6 FSI, 1.8, 1.8 T, 1.8 T GTI, 2.0, 2.3 V5 ..... 08/97 → 11/05 .... CH 1J-Y-500 001 →|, FWD		○	***VKDA 40123 T***			**VKDP 43106 T**
1.9 SDI, 1.9 TDI ..... 08/97 → 11/05 .... 27), 24), 25), 28), FWD ...		○	**VKDA 40104 T**			**VKDP 43106 T**
1.9 SDI, 1.9 TDI ..... 08/97 → 11/05 .... 22), 26), →| CH 1J-Y-500 000, FWD		○	**VKDA 40104 T**			**VKDP 43106 T**
1.9 SDI, 1.9 TDI ..... 08/97 → 11/05 .... 29), 30), 31), FWD		○	***VKDA 40123 T***			**VKDP 43106 T**
1.9 SDI, 1.9 TDI ..... 08/97 → 11/05 .... CH 1J-Y-500 001 →|, FWD		○	***VKDA 40123 T***			**VKDP 43106 T**
GOLF IV						
GOLF IV ..... 06/98 → 11/05	●		**VKDA 35110 T**			**VKDP 33100 T**
GOLF IV ..... 06/98 → 11/05		○	**VKDA 40101 T**			
GOLF IV Variant						
1.4 16V, 1.6, 1.6 16V, 1.6 FSI, 1.8 T, 2.0, 2.0 Bi-Fuel, 2.3 V5 ..... 05/99 → 11/05	●		**VKDA 35113 T**			**VKDP 33101 T**
1.9 SDI, 1.9 TDI ..... 05/99 → 11/05	●		**VKDA 35113 T**			**VKDP 33101 T**
4MOTION: 1.8, 2.0, 2.3 V5, 2.8 V6 ..... 05/99 → 11/05	●		**VKDA 35113 T**			
4MOTION: 1.9 TDI ..... 05/99 → 11/05	●		**VKDA 35113 T**			
1.4 16V, 1.6, 1.6 16V, 1.6 FSI, 1.8 T, 2.0, 2.0 Bi-Fuel, 2.3 V5 ..... 05/99 → 11/05 .... FWD		○	***VKDA 40123 T***			
1.4 16V, 1.6, 1.6 16V, 1.6 FSI, 1.8 T, 2.0, 2.0 Bi-Fuel, 2.3 V5 ..... 05/99 → 02/06		○				**VKDP 43106 T**
1.9 SDI, 1.9 TDI ..... 05/99 → 11/05 .... FWD		○	***VKDA 40123 T***			**VKDP 43106 T**
GOLF V						
1.4 16V, 1.4 FSI, 1.4 TSI, 1.6, 1.6 FSI, 2.0 FSI, 2.0 GTI ..... 10/03 → 11/05	●		**VKDA 35122 T**	**VKD 35025 T**		

1.9 TDI, 2.0 GTD, 2.0 SDI, 2.0 TDI	10/03 → 11/05	...	●		**VKDA 35122 T**	**VKD 35025 T**
4MOTION: 2.0 FSI	08/04 → 11/05	...	●		**VKDA 35122 T**	**VKD 35025 T**
4MOTION: 1.9 TDI, 2.0 TDI	08/04 → 11/05	...	●		**VKDA 35122 T**	**VKD 35025 T**
1.4 16V, 1.4 FSI, 1.4 TSI, 1.6, 1.6 FSI, 2.0 FSI, 2.0 GTI	10/03 → 11/05	... 27), 22), 32), CH 1K-5-600 001 |→, FWD		○	***VKDA 40124 T***	
1.4 16V, 1.4 FSI, 1.4 TSI, 1.6, 1.6 FSI, 2.0 FSI, 2.0 GTI	10/03 → 11/05	... 24), CH 1K-6-020 001 |→, FWD		○	***VKDA 40125 T***	
1.4 16V, 1.4 FSI, 1.4 TSI, 1.6, 1.6 FSI, 2.0 FSI, 2.0 GTI	10/03 → 11/05	... 24), CH 1K-5-600 001 |→, →| CH 1K-6-020 000, FWD		○	***VKDA 40124 T***	
1.4 16V, 1.4 FSI, 1.4 TSI, 1.6, 1.6 FSI, 2.0 FSI, 2.0 GTI	10/03 → 11/05	... →| CH 1K-5-600 000, FWD		○	***VKDA 40124 T***	
1.9 TDI, 2.0 GTD, 2.0 SDI, 2.0 TDI	10/03 → 11/05	... 27), 22), 32), CH 1K-5-600 001 |→, FWD		○	***VKDA 40124 T***	
1.9 TDI, 2.0 GTD, 2.0 SDI, 2.0 TDI	10/03 → 11/05	... 24), CH 1K-6-020 001 |→, FWD		○	***VKDA 40125 T***	
1.9 TDI, 2.0 GTD, 2.0 SDI, 2.0 TDI	10/03 → 11/05	... 24), CH 1K-5-600 001 |→, →| CH 1K-6-020 000, FWD		○	***VKDA 40124 T***	
1.9 TDI, 2.0 GTD, 2.0 SDI, 2.0 TDI	10/03 → 11/05	... →| CH 1K-5-600 000, FWD		○	***VKDA 40124 T***	
GOLF V PLUS						
GOLF V PLUS	01/05 → 11/05	...	●		**VKDA 35122 T**	**VKD 35025 T**
GOLF V PLUS	01/05 → 11/05	...		○	***VKDA 40124 T***	
JETTA I						
JETTA I	08/79 → 12/83	...	●		**VKDC 35105 T**	**VKDP 33100 T**
JETTA I	08/79 → 12/83	...		○	—	**VKDP 43101 T**
JETTA II						
JETTA II	01/84 → 12/91	...	●		**VKDC 35102 T**	**VKDP 33100 T**
SYNCRO: JETTA II	08/87 → 07/91	...	●		**VKDC 35102 T**	**VKDP 33100 T**
JETTA II	01/84 → 12/91	...		○	**VKDA 40101 T**	**VKDP 43100 T**
SYNCRO: JETTA II	08/87 → 07/91	...		○	**VKDA 40101 T**	
JETTA III						
JETTA III	08/05 → 11/05	...	●		**VKDA 35122 T**	**VKD 35025 T**
JETTA III	08/05 → 11/05	...		○	***VKDA 40125 T***	
LUPO						
LUPO	09/98 → 11/05	...	●		**VKDA 35111 T**	**VKDP 33107 T**
LUPO	09/98 → 11/05	...		○	—	

VW .../...

MULTIVAN							
2.0, 3.2 V6	04/03 → 04/05		●		VKDA_____		
1.9 TDI, 2.5 TDI	04/03 → 04/05		●		VKDA_____		
4MOTION: 3.2 V6	07/04 → 04/05		●		VKDA_____		
4MOTION: 2.5 TDI	07/04 → 04/05		●		VKDA_____		
NEW BEETLE							
1.4, 1.6, 1.8 T, 2.0, 2.3 V5, RSI 3.2	01/98 → 11/05		●		**VKDA 35113 T**		
1.4, 1.6, 1.8 T, 2.0, 2.3 V5	01/98 → 02/06		●				**VKDP 33101 T**
1.9 TDI	01/98 → 11/05		●		**VKDA 35113 T**		**VKDP 33101 T**
1.4, 1.6, 1.8 T, 2.0, 2.3 V5	01/98 → 11/05	→| CH 1C-1-405 000, 9C-1-603 000		○	**VKDA 40104 T**		
1.4, 1.6, 1.8 T, 2.0, 2.3 V5	01/98 → 11/05	CH 1C-1-405 001, 9C-1-603 001 |→		○	***VKDA 40123 T***		
1.9 TDI	01/98 → 11/05	→| CH 1C-1-405 000, 9C-1-603 000		○	**VKDA 40104 T**		
1.9 TDI	01/98 → 11/05	CH 1C-1-405 001, 9C-1-603 001 |→		○	***VKDA 40123 T***		
NEW BEETLE							
1.4, 1.6, 2.0	01/03 → 11/05		●		**VKDA 35113 T**		
1.9 TDI	03/03 → 11/05		●		**VKDA 35113 T**		
1.4, 1.6	01/03 → 11/05	→| CH 1C-1-405 000, 9C-1-603 000		○	**VKDA 40104 T**		
1.4, 1.6, 1.8 T, 2.0	01/03 → 11/05	CH 1C-1-405 001, 9C-1-603 001 |→		○	***VKDA 40123 T***		
2.0	01/03 → 11/05	→| CH 1C-1-405 000, 9C-1-603 000		○	**VKDA 40104 T**		
1.9 TDI	03/03 → 11/05	→| CH 1C-1-405 000, 9C-1-603 000		○	**VKDA 40104 T**		
1.9 TDI	03/03 → 11/05	CH 1C-1-405 001, 9C-1-603 001 |→		○	***VKDA 40123 T***		
PASSAT (32B)							
PASSAT (32B)	08/80 → 03/88	~~HD~~	●		**VKDC 35100 T**		**VKDP 33100 T**
PASSAT (32B)	08/80 → 03/88			○			**VKDP 43100 T**
PASSAT (32B) Variant							
PASSAT (32B) Variant	08/80 → 03/88	~~HD~~	●		**VKDC 35100 T**		**VKDP 33100 T**
SYNCRO: PASSAT (32B) Variant	05/84 → 03/88	~~HD~~	●		**VKDC 35100 T**		**VKDP 33100 T**
PASSAT (32B)							
PASSAT (32B)	01/85 → 03/88	~~HD~~	●		**VKDC 35100 T**		
PASSAT (3A2, 35I)							
1.6, 1.8, 1.8 16V, 2.0 16V	02/88 → 08/89	~~HD~~, FWD	●		**VKDC 35101 T**		
1.6, 1.8, 1.8 16V, 2.0, 2.0 16V	09/89 → 08/92	~~HD~~	●		**VKDC 35101 T**		**VKDP 33100 T**
1.8, 2.0, 2.0 16V, 2.8 VR6	09/92 → 08/96		●		**VKDA 35110 T**		
2.8 VR6	06/91 → 12/93	CH 31-M-320 489 |→	●				**VKDP 33108 T**
1.6	10/94 → 08/96	CH 31-P-026 436 |→, HD	●				**VKDP 33108 T**
2.0, 2.0 16V	01/94 → 08/96	CH 31-P-026 436 |→, HD	●				**VKDP 33108 T**

1.6 TD, 1.9 D	08/88 → 08/89	~~HD~~, FWD	●		VKDC 35101 T			VKDP 33100 T
1.6 TD, 1.9 D, 1.9 TD	09/89 → 08/92	~~HD~~	●		VKDC 35101 T			VKDP 33100 T
1.6 TD, 1.9 D, 1.9 TD, 1.9 TDI	09/92 → 08/96		●		VKDA 35110 T			VKDP 33100 T
1.9 TDI	10/93 → 08/96	CH 31-P-026 436 →, HD	●					VKDP 33108 T
SYNCRO: PASSAT (3A2, 35I)	09/89 → 08/92	~~HD~~	●		VKDC 35101 T			
SYNCRO: PASSAT (3A2, 35I)	09/92 → 08/96		●		VKDA 35110 T			
1.6, 1.8, 1.8 16V, 2.0, 2.0 16V	02/88 → 12/93			○	—			
1.6, 1.8, 2.0, 2.0 16V, 2.8 VR6	02/88 → 08/96	~~HD~~		○				VKDP 43102 T
1.6, 1.8, 2.0, 2.0 16V	01/94 → 08/96			○	—			
2.8 VR6	06/91 → 08/96			○	—			
1.6 TD, 1.9 D, 1.9 TD, 1.9 TDI	08/88 → 12/93			○	—			
1.6 TD, 1.9 D, 1.9 TD, 1.9 TDI	08/88 → 08/96	~~HD~~		○				VKDP 43102 T
1.9 TD, 1.9 TDI	01/94 → 08/96			○	—			
SYNCRO: PASSAT (3A2, 35I)	08/88 → 08/96			○	—			

PASSAT (3A5, 35I) Variant

1.6, 1.8, 1.8 16V, 2.0 16V	02/88 → 08/89	~~HD~~, FWD	●		VKDC 35101 T			
1.6, 1.8, 1.8 16V, 2.0, 2.0 16V	09/89 → 08/92	~~HD~~	●		VKDC 35101 T			VKDP 33100 T
1.6, 1.8, 2.0, 2.0 16V	09/92 → 05/97		●		VKDA 35110 T			VKDP 33100 T
2.8 VR6	06/91 → 05/97		●		VKDA 35110 T			
1.6	07/94 → 12/95	CH 31-P-026 436 →, HD	●					VKDP 33108 T
1.8, 2.0	01/93 → 09/93	CH 31-P-026 436 →, HD	●					VKDP 33108 T
2.0, 2.0 16V	01/93 → 09/96	CH 31-P-026 436 →, HD	●					VKDP 33108 T
2.8 VR6	06/91 → 09/96	~~AAS~~, CH 31-M-320 489, 31-P-026 436 →, HD	●					VKDP 33108 T
1.6 TD, 1.9 D	08/88 → 08/89	~~HD~~, FWD	●		VKDC 35101 T			VKDP 33100 T
1.6 TD, 1.9 D, 1.9 TD	09/89 → 08/92	~~HD~~	●		VKDC 35101 T			VKDP 33100 T
1.6 TD, 1.9 D, 1.9 TD, 1.9 TDI	09/92 → 05/97		●		VKDA 35110 T			VKDP 33100 T
1.9 TD	01/93 → 09/93	CH 31-P-026 436 →, HD	●					VKDP 33108 T
1.9 D, 1.9 TDI	01/93 → 09/96	CH 31-P-026 436 →, HD	●					VKDP 33108 T
SYNCRO: 1.8 G60	08/88 → 08/89	~~HD~~	●		VKDC 35100 T			
SYNCRO: PASSAT (3A5, 35I) Variant	09/89 → 08/92	~~HD~~	●		VKDC 35101 T			
SYNCRO: PASSAT (3A5, 35I) Variant	09/92 → 05/97		●		VKDA 35110 T			
SYNCRO: 2.0	01/93 → 05/97	CH 31-P-026 436 →	●					VKDP 33108 T
1.6, 1.8, 1.8 16V, 2.0, 2.0 16V	02/88 → 12/93			○	—			
1.6, 1.8, 2.0 16V, 2.8 VR6	08/88 → 05/97	~~HD~~		○				VKDP 43102 T
1.6, 1.8, 2.0, 2.0 16V	01/94 → 05/97			○	—			
2.8 VR6	06/91 → 05/97			○	—			
1.6 TD, 1.9 D, 1.9 TD, 1.9 TDI	08/88 → 12/93			○	—			
1.9 TD, 1.9 TDI	03/91 → 05/97	~~HD~~		○				VKDP 43102 T
1.9 TD, 1.9 TDI	01/94 → 05/97			○	—			
SYNCRO: PASSAT (3A5, 35I) Variant	08/88 → 05/97			○	—			

PASSAT (3B2)

1.6, 1.8, 1.8 T, 2.3 VR5, 2.8 V6	08/96 → 05/99	→ | CH 3B-YE018 431	●		VKDA 35116 T			

VW .../...

1.6, 1.8, 1.8 T, 2.0, 2.3 VR5, 2.8 V6	06/99 → 11/00	CH 3B-YE018 432 →		●		VKDA 35118 T	
1.6, 1.8, 1.8 T, 2.0, 2.3 VR5, 2.8 V6	08/96 → 11/00	~~SPS~~, →	CH 3B-YE121 221, ~~HD~~	●			VKDP 33111 T
1.9 TDI, 2.5 TDI	10/96 → 05/99	→	CH 3B-YE018 431	●		VKDA 35116 T	
1.9 TDI, 2.5 TDI	06/99 → 11/00	CH 3B-YE018 432 →		●		VKDA 35118 T	
1.9 TDI	10/96 → 11/00	~~SPS~~, →	CH 3B-YE121 221, ~~HD~~	●			VKDP 33111 T
SYNCRO/4MOTION: 1.8, 2.3 VR5, 2.8 V6	10/96 → 05/99	→	CH 3B-YE018 431	●		VKDA 35116 T	
SYNCRO/4MOTION: 1.8 Syncro/4motion, 2.0 4motion, 2.3 VR5 Syncro/4motion, 2.8 V6 4motion, 2.8 V6 Syncro/4motion	06/99 → 11/00	CH 3B-YE018 432 →		●		VKDA 35118 T	
SYNCRO/4MOTION: 2.8 V6..	10/96 → 12/96			●		VKDA 35110 T	
SYNCRO/4MOTION: 1.9 TDI	10/96 → 12/96			●		VKDA 35110 T	
SYNCRO/4MOTION: 1.9 TDI, 2.5 TDI	10/96 → 05/99	→	CH 3B-YE018 431	●		VKDA 35116 T	
SYNCRO/4MOTION: 1.9 TDI 4motion, 1.9 TDI Syncro/4motion, 2.5 TDI Syncro/4motion	06/99 → 11/00	CH 3B-YE018 432 →		●		VKDA 35118 T	
1.6, 1.8, 1.8 T, 2.0, 2.3 VR5, 2.8 V6	08/96 → 11/00	FWD			○	VKDA 40110 T	
1.9 TDI, 2.5 TDI	10/96 → 11/00	FWD			○	VKDA 40110 T	
SYNCRO/4MOTION: 1.8 Syncro/4motion, 2.0 4motion, 2.3 VR5 Syncro/4motion, 2.8 V6 4motion, 2.8 V6 Syncro/4motion	01/98 → 11/00				○	VKDA 40109 T	
SYNCRO/4MOTION: 1.9 TDI 4motion, 1.9 TDI Syncro/4motion, 2.5 TDI Syncro/4motion	01/98 → 11/00				○	VKDA 40109 T	

PASSAT (3B5) Variant

1.6, 1.8, 1.8 T, 2.3 VR5, 2.8 V6	06/97 → 05/99	→	CH 3B-YE018 431	●		VKDA 35116 T	
1.6, 1.8, 1.8 T, 2.0, 2.3 VR5, 2.8 V6	06/97 → 11/00	~~SPS~~, ~~HD~~		●			VKDP 33111 T
1.6, 1.8, 1.8 T, 2.0, 2.3 VR5, 2.8 V6	06/99 → 11/00	CH 3B-YE018 432 →		●		VKDA 35118 T	
1.9 TDI, 2.5 TDI	06/97 → 05/99	→	CH 3B-YE018 431	●		VKDA 35116 T	
1.9 TDI, 2.5 TDI	06/97 → 11/00	~~SPS~~, ~~HD~~		●			VKDP 33111 T
1.9 TDI, 2.5 TDI	06/99 → 11/00	CH 3B-YE018 432 →		●		VKDA 35118 T	
SYNCRO/4MOTION: 1.8, 2.3 VR5, 2.8 V6	06/97 → 05/99	→	CH 3B-YE018 431	●		VKDA 35116 T	
SYNCRO/4MOTION: 1.8 Syncro/4motion, 2.0 4motion, 2.3 VR5 Syncro/4motion, 2.8 V6 4motion, 2.8 V6 Syncro/4motion	06/97 → 11/00	~~SPS~~, ~~HD~~		●			VKDP 33111 T
SYNCRO/4MOTION: 1.8 Syncro/4motion, 2.0 4motion, 2.3 VR5 Syncro/4motion, 2.8 V6 4motion, 2.8 V6 Syncro/4motion	06/99 → 11/00	CH 3B-YE018 432 →		●		VKDA 35118 T	
SYNCRO/4MOTION: 1.9 TDI, 2.5 TDI	06/97 → 05/99	→	CH 3B-YE018 431	●		VKDA 35116 T	

SYNCRO/4MOTION: 1.9 TDI 4motion, 1.9 TDI Syncro/4motion, 2.5 TDI Syncro/4motion	06/97 → 11/00	~~SPS~~, ~~HB~~	●			**VKDP 33111 T**
SYNCRO/4MOTION: 1.9 TDI 4motion, 1.9 TDI Syncro/4motion, 2.5 TDI Syncro/4motion	06/99 → 11/00	CH 3B-YE018 432 |→	●		**VKDA 35118 T**	
1.6, 1.8, 1.8 T, 2.0, 2.3 VR5, 2.8 V6	06/97 → 11/00	FWD		○	**VKDA 40110 T**	
1.9 TDI, 2.5 TDI	06/97 → 11/00	FWD		○	**VKDA 40110 T**	
SYNCRO/4MOTION: 1.8 Syncro/4motion, 2.0 4motion, 2.3 VR5 Syncro/4motion, 2.8 V6 4motion, 2.8 V6 Syncro/4motion	01/98 → 11/00			○	**VKDA 40109 T**	
SYNCRO/4MOTION: 1.9 TDI 4motion, 1.9 TDI Syncro/4motion, 2.5 TDI Syncro/4motion	01/98 → 11/00			○	**VKDA 40109 T**	

PASSAT (3B3)

1.6, 1.8 T, 1.8 T 20V, 2.0, 2.3 V5	11/00 → 04/01	→| CH 3B-1-300 000	●		**VKDA 35118 T**	
PASSAT (3B3)	11/00 → 02/06	~~SPS~~	●			**VKDP 33111 T**
1.6, 1.8 T, 1.8 T 20V, 2.0, 2.3 V5	05/01 → 11/05	CH 3B-1-300 001 |→	●		VKDA____	
1.9 TDI, 2.5 TDI	11/00 → 04/01	→| CH 3B-1-300 000	●		**VKDA 35118 T**	
1.9 TDI, 2.0 TDI, 2.5 TDI	05/01 → 11/05	CH 3B-1-300 001 |→	●		VKDA____	
4MOTION: 2.0, 2.3 V5, 2.8	11/00 → 04/01	→| CH 3B-1-300 000	●		**VKDA 35118 T**	
4MOTION: 2.0, 2.3 V5, 2.8, 4.0 W8	05/01 → 11/05	CH 3B-1-300 001 |→	●		VKDA____	
4MOTION: 1.9 TDI, 2.5 TDI	11/00 → 04/01	→| CH 3B-1-300 000	●		**VKDA 35118 T**	
4MOTION: PASSAT (3B3)	11/00 → 02/06	~~SPS~~	●			**VKDP 33111 T**
4MOTION: 1.9 TDI, 2.5 TDI	05/01 → 11/05	CH 3B-1-300 001 |→	●		VKDA____	
1.6, 1.8 T, 1.8 T 20V, 2.0, 2.3 V5	11/00 → 04/01	→| CH 3B-1-300 000, FWD		○	**VKDA 40110 T**	
1.6, 1.8 T, 1.8 T 20V, 2.0, 2.3 V5	04/01 → 11/05	CH 3B-1-300 001 |→, FWD		○	***VKDA 40128 T***	
1.9 TDI, 2.5 TDI	11/00 → 04/01	→| CH 3B-1-300 000, FWD		○	**VKDA 40110 T**	
1.9 TDI, 2.0 TDI, 2.5 TDI	04/01 → 11/05	CH 3B-1-300 001 |→, FWD		○	***VKDA 40128 T***	
4MOTION: 2.0, 2.3 V5, 2.8	11/00 → 04/01	→| CH 3B-1-300 000		○	**VKDA 40109 T**	
4MOTION: 1.9 TDI, 2.5 TDI	11/00 → 04/01	→| CH 3B-1-300 000		○	**VKDA 40109 T**	

PASSAT (3B6)

PASSAT (3B6)	11/00 → 11/05		●		VKDA____	
PASSAT (3B6)	11/00 → 02/06	~~SPS~~	●			**VKDP 33111 T**
4MOTION: PASSAT (3B6)	11/00 → 11/05		●		VKDA____	
4MOTION: PASSAT (3B6)	11/00 → 02/06	~~SPS~~	●			**VKDP 33111 T**
PASSAT (3B6)	11/00 → 11/05	FWD		○	***VKDA 40128 T***	

PASSAT (3C2)

1.6 FSI, 2.0 FSI, 3.2 FSI	03/05 → 11/05		●		**VKDA 35122 T**	**VKD 35025 T**
1.9 TDI, 2.0 TDI	03/05 → 11/05		●		**VKDA 35122 T**	**VKD 35025 T**
1.6 FSI, 2.0 FSI, 3.2 FSI	03/05 → 11/05	33)		○	—	
1.9 TDI, 2.0 TDI	03/05 → 11/05	33)		○	—	

PASSAT (3C5) Variant

1.6, 1.6 FSI, 2.0 FSI	08/05 → 11/05		●		**VKDA 35122 T**	**VKD 35025 T**

VW .../...						
1.9 TDI, 2.0 TDI ..... 08/05 → 11/05	●		VKDA 35122 T	VKD 35025 T		
1.6, 1.6 FSI, 2.0 FSI ..... 08/05 → 11/05 ....33)		○	—			
1.9 TDI, 2.0 TDI ..... 08/05 → 11/05 ....33)		○	—			
POLO (86)						
POLO (86) ..... 03/75 → 09/81	●		VKDC 35103 T			VKDP 33102 T
POLO (86) ..... 03/75 → 09/81		○	VKDA 40102 T			VKDP 43102 T
POLO (86C, 80)						
POLO (86C, 80) ..... 10/81 → 09/94	●		VKDC 35103 T			VKDP 33102 T
POLO (86C, 80) ..... 10/81 → 09/94		○	VKDA 40102 T			VKDP 43102 T
POLO (86C, 80)						
POLO (86C, 80) ..... 10/81 → 09/94	●		VKDC 35103 T			VKDP 33102 T
1.0, 1.0 CAT, 1.1, 1.3, 1.3 CAT, 1.3 G40 ..... 10/81 → 09/94		○	VKDA 40102 T			VKDP 43102 T
1.3 D, 1.4 D ..... 08/86 → 09/94		○	VKDA 40102 T			VKDP 43102 T
POLO (86C, 80)						
POLO (86C, 80) ..... 01/85 → 09/94	●		VKDC 35103 T			VKDP 33102 T
POLO (86C, 80) ..... 01/85 → 09/94		○				VKDP 43102 T
POLO (86_)						
1.0 ..... 04/93 → 10/94	●		VKDC 35103 T			
1.0 ..... 11/94 → 09/99	●		VKDA 35111 T			
1.3 ..... 04/93 → 10/94	●		VKDC 35103 T			
1.3 ..... 11/94 → 09/99	●		VKDA 35111 T			
1.4 D ..... 04/93 → 10/94	●		VKDC 35103 T			
1.4 D ..... 11/94 → 09/99	●		VKDA 35111 T			
POLO (86_) ..... 04/93 → 02/04		○	VKDA 40101 T			
POLO (6N1)						
POLO (6N1) ..... 10/94 → 10/99	●		VKDA 35111 T			VKDP 33107 T
POLO (6N1) ..... 10/94 → 10/99		○	VKDA 40101 T			VKDP 43103 T
POLO (6KV5) Variant						
POLO (6KV5) Variant ..... 05/97 → 09/99	●		VKDA 35110 T			VKDP 33100 T
POLO (6KV5) Variant ..... 05/97 → 09/01		○	VKDA 40101 T			
POLO (6N1)						
POLO (6N1) ..... 10/94 → 09/99	●		VKDA 35111 T			
POLO (6N1) ..... 10/94 → 02/04		○	VKDA 40101 T			
POLO (6KV2)						
60 1.4, 100 1.6, 75 1.6, 90 1.8 ..... 11/95 → 09/99	●		VKDA 35110 T			VKDP 33100 T
57 1.7 SDI, 110 1.9 TDI, 64 1, 9 D, 64 1.9 SDI, 90 1.9 TDI ..... 12/95 → 09/99	●		VKDA 35110 T			VKDP 33100 T
POLO (6KV2) ..... 11/95 → 09/01		○	VKDA 40101 T			VKDP 43105 T

POLO (6N2)								
POLO (6N2)	10/99 → 09/01		●		**VKDA 35115 T**	**VKD 35025 T**	**VKDP 33800 T**
POLO (6N2)	10/99 → 09/01			○	**VKDA 40101 T**		**VKDP 43103 T**
POLO (9N_)								
1.2, 1.4 16V, 1.4 FSI	10/01 → 11/05	SPS	●		**VKDA 35115 T**	**VKD 35025 T**	**VKDP 33800 T**
1.2, 1.4 16V, 1.4 FSI	10/01 → 11/05	SPS	●		—	**VKD 35025 T**	**VKDP 33800 T**
1.4 TDI, 1.9 SDI, 1.9 TDI	10/01 → 11/05	SPS	●		**VKDA 35115 T**	**VKD 35025 T**	**VKDP 33800 T**
1.4 TDI, 1.9 SDI, 1.9 TDI	10/01 → 11/05	SPS	●		—	**VKD 35025 T**	**VKDP 33800 T**
POLO (9N_)	10/01 → 05/06			○	**VKDA 40104 T**		
POLO (9N_)	10/01 → 02/06	SPS, CH 9N-2-000 001 →		○			VKDP____
POLO								
1.4	07/03 → 11/05		●		**VKDA 35115 T**	**VKD 35025 T**	
1.4	07/03 → 11/05		●		—	**VKD 35025 T**	
1.4 TDI, 1.9 SDI	07/03 → 11/05		●		**VKDA 35115 T**	**VKD 35025 T**	
1.4 TDI, 1.9 SDI	07/03 → 11/05		●		—	**VKD 35025 T**	
POLO	07/03 → 02/04			○	**VKDA 40104 T**		
SANTANA								
SANTANA	08/81 → 12/84		●		**VKDC 35100 T**		**VKDP 33100 T**
SANTANA	08/81 → 12/84			○			**VKDP 43100 T**
SCIROCCO								
1.1, 1.3	09/75 → 12/83		●		**VKDC 35105 T**		**VKDP 33100 T**
1.5, 1.6, 1.8, 1.8 16V	02/74 → 07/92		●		**VKDC 35105 T**		
SCIROCCO	02/74 → 07/92			○	—		
1.1, 1.3, 1.5, 1.6, 1.8	02/74 → 07/92			○			**VKDP 43101 T**
SHARAN								
1.8 T 20V, 2.0, 2.8 V6 24V, 2.8 VR6	09/95 → 09/05		●		**VKDA 35110 T**		
1.8 T 20V, 2.0, 2.8 V6 24V, 2.8 VR6	09/95 → 02/06	SPS	●				**VKDP 33405 T**
1.9 TDI	09/95 → 09/05		●		**VKDA 35110 T**		
1.9 TDI	09/95 → 02/06	SPS	●				**VKDP 33405 T**
SYNCRO/4MOTION: 2.8 V6 24V 4motion, 2.8 VR6 Syncro	11/96 → 09/05		●		**VKDA 35110 T**		
SYNCRO/4MOTION: 2.8 V6 24V 4motion, 2.8 VR6 Syncro	11/96 → 02/06	SPS	●				**VKDP 33405 T**
SYNCRO/4MOTION: 1.9 TDI 4motion	04/00 → 09/05		●		**VKDA 35110 T**		
SYNCRO/4MOTION: 1.9 TDI 4motion	04/00 → 02/06	SPS	●				**VKDP 33405 T**
TOUAREG								
3.2 V6, 4.2 V8	10/02 → 02/06		●				—
2.5 R5 TDI, 5.0 V10 TDI	10/02 → 02/06		●				—
TOURAN								
TOURAN	02/03 → 11/05		●		**VKDA 35122 T**	**VKD 35025 T**	
TOURAN	02/03 → 02/06	SPS	●				VKDP____
TOURAN	02/03 → 11/05			○	***VKDA 40126 T***		
TOURAN	02/03 → 02/06	SPS		○			—

VW .../...										
VENTO										
1.4, 1.6	ABD, ABU	11/91 → 08/94			●		VKDC 35102 T			
1.4, 1.6, 1.8, 2.0	2E, AAM, ABD, ABS, ABU, ADY, ADZ, AEA, AEE, AEK, AEX, AFT, AGG, AKR	01/92 → 09/98	~~SPS~~, ~~HD~~		●					VKDP 33107 T
1.4, 1.6, 1.8, 2.0	2E, AAM, ABD, ABS, ABU, ADY, ADZ, AEA, AEE, AEK, AEX, AFT, AGG, AKR	09/94 → 09/98			●		VKDA 35110 T			
1.8	AAM, ABS	11/91 → 08/94	, Man. GBX, ~~AC~~		●		VKDC 35102 T			
1.8	AAM, ABS	11/91 → 08/94	, Auto. GBX, AC		●		VKDC 35101 T			
2.8 VR6	AAA	01/92 → 09/98			●		VKDA 35110 T			
1.9 TD	AAZ	11/91 → 08/94			●		VKDC 35101 T			
1.9 D	1Y	11/91 → 08/94			●		VKDC 35101 T			
1.9 D, 1.9 SDI, 1.9 TD, 1.9 TDI	1Y, 1Z, AAZ, AEY, AHU, ALE	01/92 → 09/98	~~SPS~~, ~~HD~~		●					VKDP 33107 T
1.9 D, 1.9 SDI, 1.9 TD, 1.9 TDI	1Y, 1Z, AAZ, AEY, AFN, AHU, ALE	09/94 → 09/98			●		VKDA 35110 T			
VENTO	1Y, 1Z, AAZ, AEY, AFN, AHU, ALE	11/91 → 09/98				○	VKDA 40101 T			VKDP 43100 T
VW										
LT 28										
LT 28		04/75 → 06/96	IST		●		—			
LT I 28-35										
LT I 28-35		04/75 → 02/04	IST		●		—			
LT II 28-46										
LT II 28-46		05/96 → 02/04	IST		●		—			
LT I 40-55										
4WD: 2.4		12/82 → 07/92			●		—			
4WD: 2.4 D, 2.4 TD		08/78 → 03/86			●		—			
2.0, 2.4, 2.4 i		04/75 → 06/96			●		—			
2.4 D, 2.4 TD		12/78 → 06/96			●		—			
TRANSPORTER I										
TRANSPORTER I		01/50 → 10/70	IST		●		—			
TRANSPORTER II										
TRANSPORTER II		08/67 → 07/79	IST		●		—			
TRANSPORTER III										
1.6		05/79 → 12/82	,		●		—			
SYNCRO: 1.9, 2.1		11/84 → 07/92			●		—			
1.9, 2.0, 2.1, 2.1 i		05/79 → 07/92			●		—			
1.6 D, 1.6 TD, 1.7 D		01/81 → 07/92			●		—			
SYNCRO: 1.6 TD		03/86 → 07/92			●		—			

TRANSPORTER IV								
1.9 D, 1.9 TD, 2.4 D, 2.5 TDI	07/90 → 02/04		●		—			
1.8, 2.0, 2.5, 2.8 V6, 2.8 VR 6	07/90 → 02/04		●		—			
SYNCRO: 2.5	10/92 → 02/04		●		—			
SYNCRO: 2.4 D, 2.5 TDI	10/92 → 02/04		●		—			
TRANSPORTER V								
2.0, 3.2 V6	04/03 → 04/05		●		VKDA____			
1.9 TDI, 2.5 TDI	04/03 → 04/05		●		VKDA____			
4MOTION: TRANSPORTER V	07/04 → 04/05		●		VKDA____			

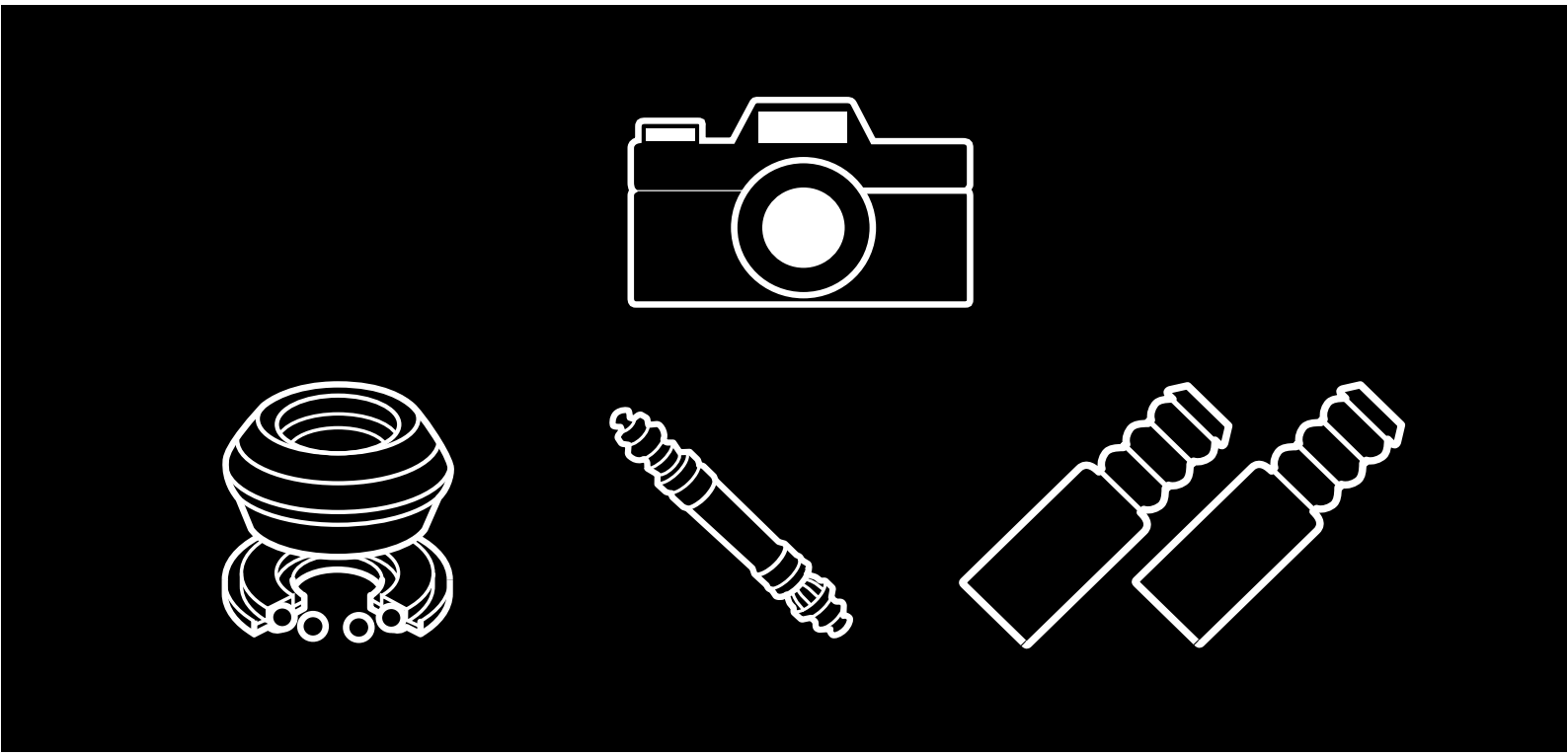

VKD 24000

CITROËN
BX / C15 / CX I / CX II / XANTIA I / XANTIA II / XM I / XM II

VKD 35001 T

PEUGEOT
505

RENAULT
AVANTIME / ESPACE III / EXPRESS/EXTRA/RAPID / LAGUNA I / MEGANE I / MEGANE I Scenic / R11 / R19 I / R19 II / R21 / R9 / SAFRANE / SCENIC I / SUPER 5

VOLVO
440 / 460 / 480

VKD 35002 T

CITROËN
AX / BERLINGO / BERLINGO (MF) / C15 / C2 / C3 / C3 Pluriel / C4 / SAXO / VISA / XSARA / XSARA PICASSO / ZX

HYUNDAI
COUPE

PEUGEOT
106 I / 106 II / 205 I / 205 II / 206 / 206 CC / 206 SW / 305 / 306 / 306 Break / 307 / 307 CC / 307 SW / 309 I / 309 II / 405 I / 405 I Break / 405 II / 405 II Break / PARTNER / PARTNER Minibus

VKD 35005 T

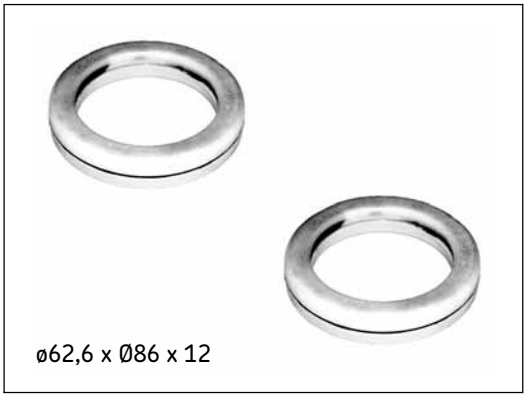

MERCEDES BENZ
A-class (W168)

OPEL
ASCONA C / OMEGA A / OMEGA B / SENATOR B

VAUXHALL
CARLTON Mk III / CAVALIER Mk II / OMEGA / SENATOR

VKD 35007 T

ø108 x Ø144,5 x 17,8

PEUGEOT
406 / 406 Break / 605 / 607

VKD 35010 T

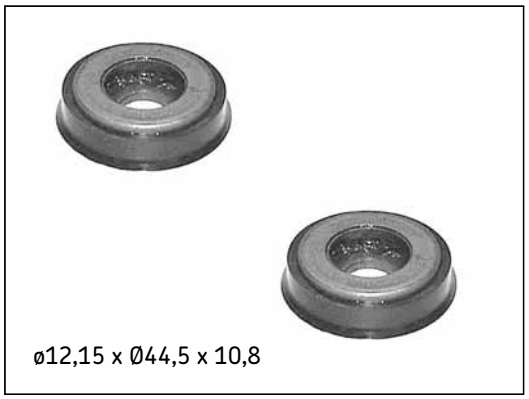

ø12,15 x Ø44,5 x 10,8

FORD
ESCORT III / ESCORT V, VI / FIESTA II / ORION I / ORION III / SCORPIO I

VKD 35011 T

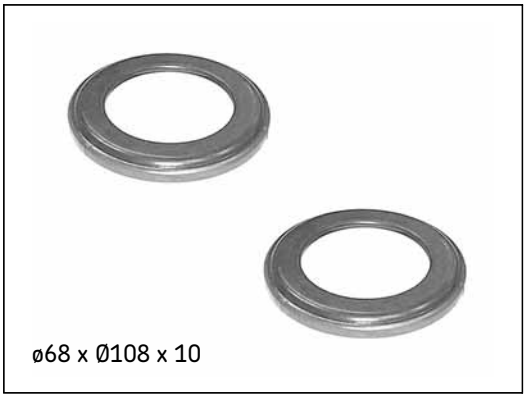

ø68 x Ø108 x 10

ROVER
200 (RF) / 200 (XW) / 400 (XW)

VKD 35012 T

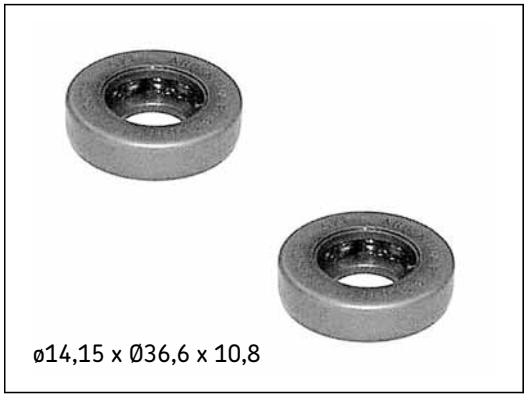

ø14,15 x Ø36,6 x 10,8

ROVER
MAESTRO / MONTEGO

SEAT
IBIZA I (021A) / MALAGA / MARBELLA

VOLVO
340-360

VKD 35013 T

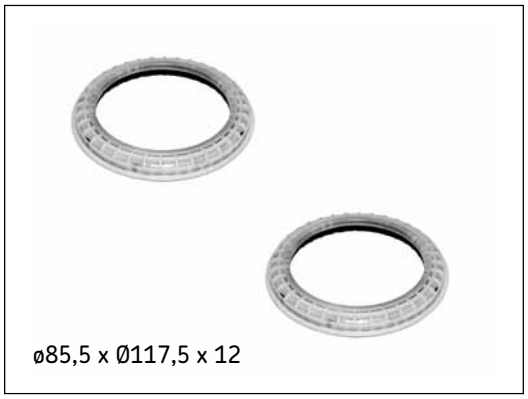

ø85,5 x Ø117,5 x 12

FORD
COUGAR / MONDEO I / MONDEO II / SCORPIO II / TRANSIT II

VOLVO
S40 I / V40

VKD 35014 T

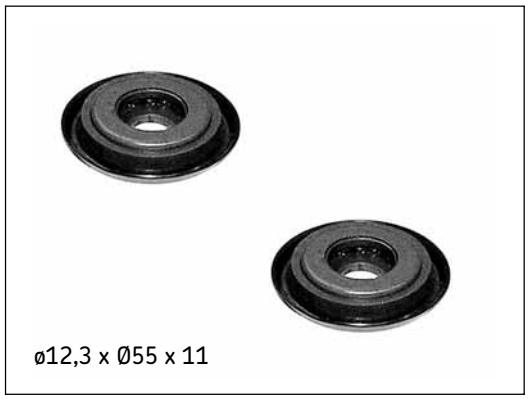

ø12,3 x Ø55 x 11

FORD
ESCORT III / ESCORT IV / ESCORT V, VI / ESCORT VII / FIESTA II / FIESTA III / ORION I / ORION II / P 100 II / SIERRA

VKD 35015 T

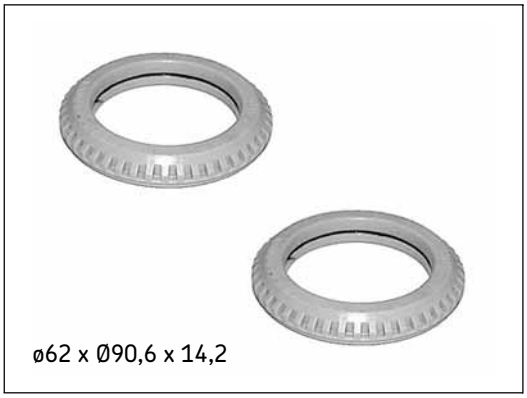

ø62 x Ø90,6 x 14,2

ALFA ROMEO
164 / 33 (905) / 33 (905A) Sportwagon

VKD 35016 T

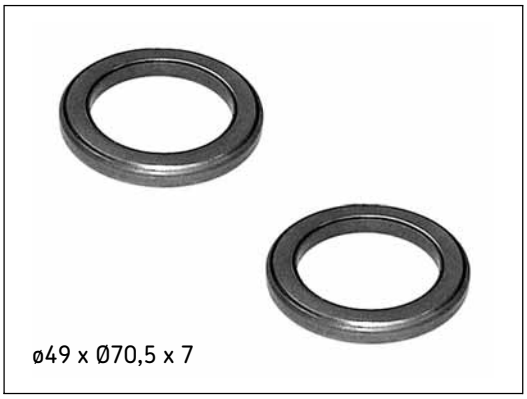

ø49 x Ø70,5 x 7

CITROËN
C25

FIAT
DUCATO I Box / DUCATO I Bus / DUCATO I Flatbed / Chassis / TALENTO

PEUGEOT
J5

VKD 35017 T

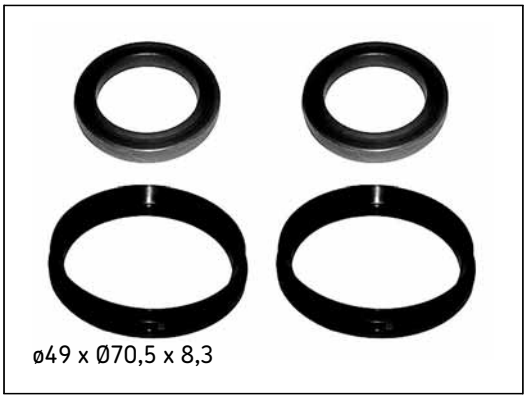

ø49 x Ø70,5 x 8,3

CITROËN
JUMPER I / JUMPER II

FIAT
DUCATO II / DUCATO III

PEUGEOT
BOXER I / BOXER II

VKD 35018 T

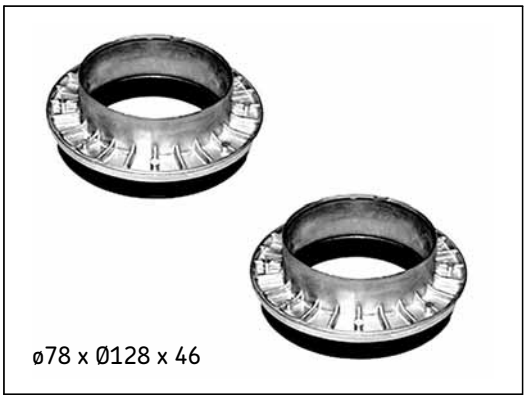

ø78 x Ø128 x 46

CITROËN
C8 / EVASION / JUMPY

FIAT
MULTIPLA / SCUDO / ULYSSE (179AX) / ULYSSE (220)

LANCIA
LYBRA / LYBRA SW / PHEDRA / ZETA

PEUGEOT
806 / 807 / EXPERT

VKD 35020 T

ø73,3 x Ø110 x 9,6

LANCIA
KAPPA / KAPPA SW

VKD 35021 T

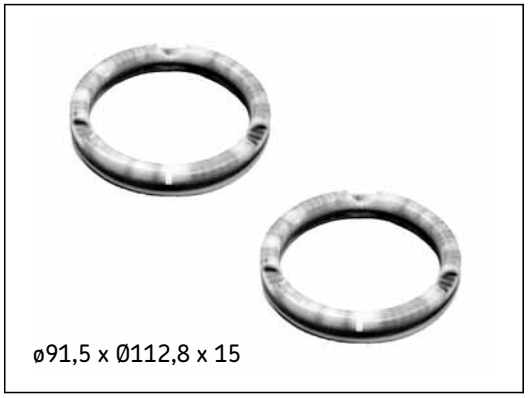

ø91,5 x Ø112,8 x 15

AUDI
100 IV / 100 IV Avant / A6 (4A, C4) / A6 (4A, C4) Avant / S4 / S4 Avant / S6 / S6 Avant / V8

VKD 35023 T

ø81,3 x Ø102,5 x 15

AUDI
100 III / 100 III Avant / 200 (43) / 200 (44, 44Q) / 200 Avant (44, 44Q) / V8

VKD 35025 T

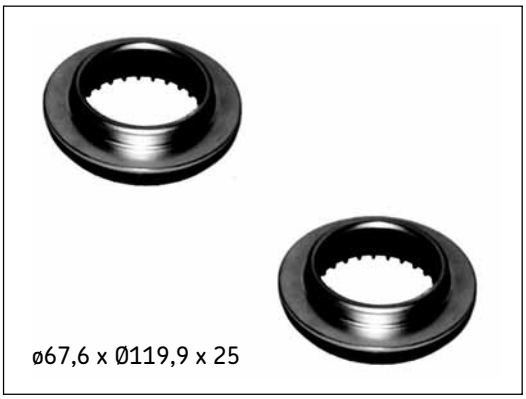

ø67,6 x Ø119,9 x 25

AUDI
A2 (8Z0) / A3 (8P1) / A3 Sportback (8PA)

SEAT
ALTEA (5P1) / CORDOBA I (6K5) Vario / CORDOBA II (6K2) / CORDOBA II (6K5) Vario / CORDOBA III (6L2) / IBIZA III (6K1) / IBIZA IV (6L) / LEON (1P1) / TOLEDO III (5P2)

SKODA
FABIA / FABIA (6Y2) / FABIA (6Y3) / FABIA (6Y5) / OCTAVIA (1Z3) / OCTAVIA (1Z5)

VW
CADDY III / GOLF V / GOLF V PLUS / JETTA III / PASSAT (3C2) / PASSAT (3C5) Variant / POLO / POLO (6N2) / POLO (9N_) / TOURAN

VKD 35030 T

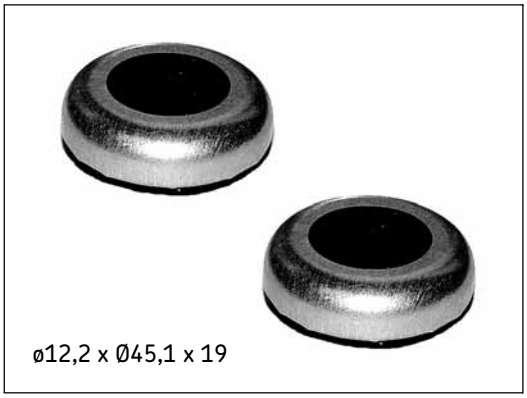

ø12,2 x Ø45,1 x 19

FIAT
IDEA / PUNTO II

HONDA
FIT / JAZZ

LANCIA
MUSA

TOYOTA
YARIS II

VKD 35032 T

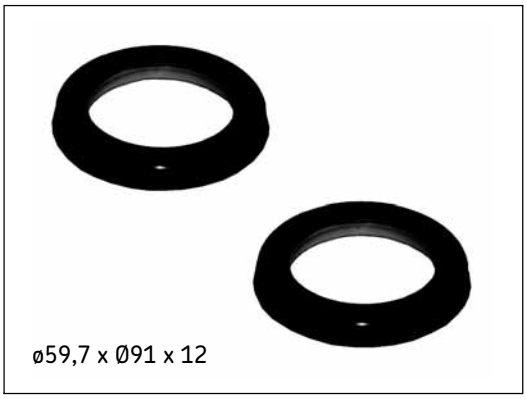

ø59,7 x Ø91 x 12

SAAB
900 II / 9-3 I / 9-5

VOLVO
740 / 760 / 940 I / 940 II / 960 I / 960 II / S90 / V90

VKD 35034 T

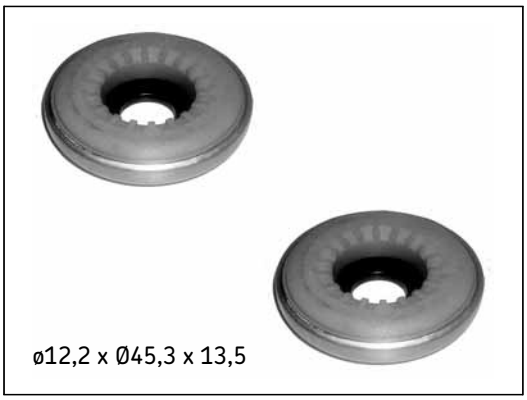

FORD
FIESTA II / FIESTA III / FIESTA IV / KA / PUMA / STREET KA

VKD 35035 T

FORD
FOCUS II / FOCUS II C-MAX

MAZDA
3

VOLVO
S40 II / V50

VKD 75001 T

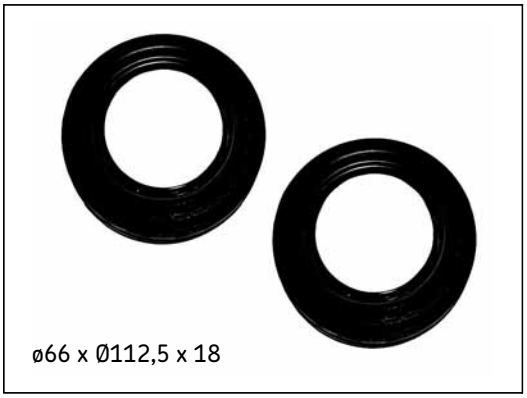

DAEWOO
LEGANZA

VKD 75003 T

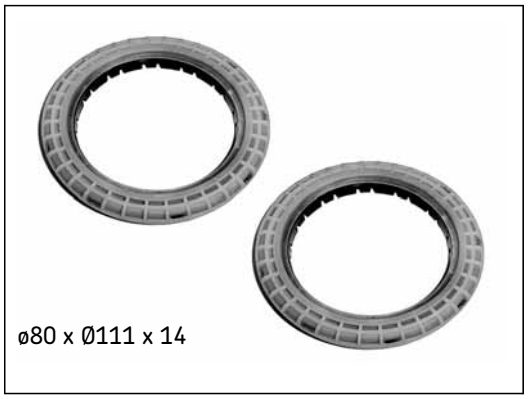

HYUNDAI
SANTA FE

VKDA 13003

CITROËN
BX

VKDA 13004

CITROËN
2 CV / ACADIANE / AMI / C25 / DYANE / MEHARI

VKDA 23001

CITROËN
BX / C15 / XANTIA I / XANTIA II

VKDA 23002

CITROËN
CX I / CX II

VKDA 23005

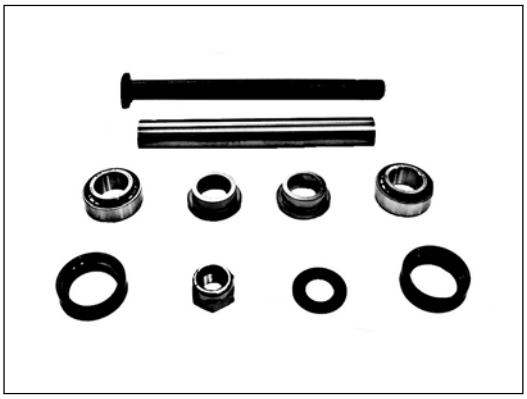

CITROËN
XM I / XM II

VKDA 27000

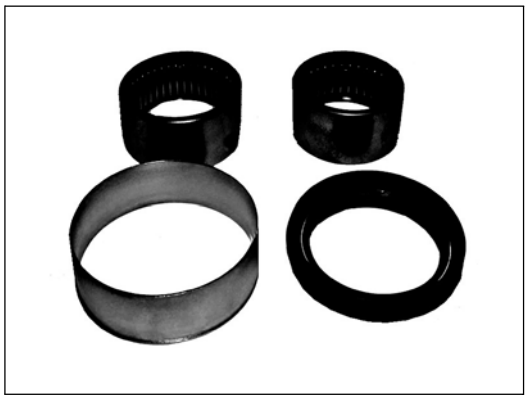

CITROËN
XSARA / ZX

PEUGEOT
205 I / 205 II / 306 / 309 I / 309 II

VKDA 27001

CITROËN
XSARA

PEUGEOT
306 / 306 Break

VKDA 27003

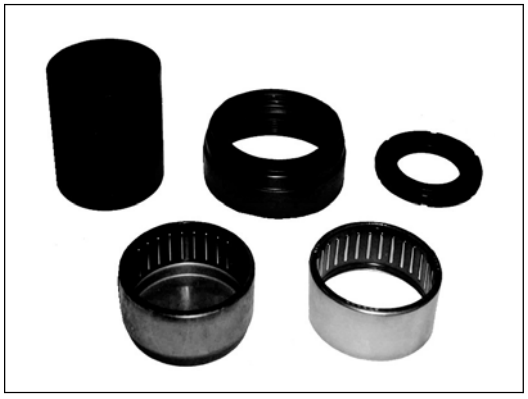

CITROËN
AX / SAXO

PEUGEOT
106 I / 106 II

VKDA 27004

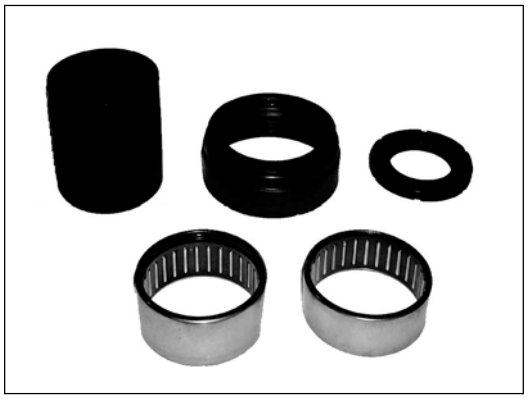

CITROËN
AX / SAXO

PEUGEOT
106 I / 106 II

VKDA 27006

CITROËN
AX / BERLINGO / BERLINGO (MF) / XSARA PICASSO

PEUGEOT
405 I / 405 I Break / 405 II / 405 II Break / PARTNER / PARTNER Minibus

VKDA 27007

PEUGEOT
206 / 206 SW

VKDA 27009

RENAULT
KANGOO / MEGANE I / R11 / R19 I / R19 II / R9

VKDA 27010

RENAULT
EXPRESS/EXTRA/RAPID

VKDA 27013

RENAULT
CLIO I / SUPER 5

VKDA 27014

FIAT
PUNTO I

VKDC 35100 T

AUDI
80 (81, 85, B2) / 80 (89, 89Q, 8A, B3) / 80 (8C, B4) / 80 (8C, B4) Avant / 90 / COUPE (81, 85) / COUPE (89, 8B) / RS2 Avant

VW
PASSAT (32B) / PASSAT (32B) Variant / PASSAT (3A5, 35I) Variant / SANTANA

VKDC 35101 T

VW
CORRADO / GOLF II / GOLF III / GOLF III Variant / PASSAT (3A2, 35I) / PASSAT (3A5, 35I) Variant / VENTO

VKDC 35102 T

SEAT
CORDOBA I (6K2/C2) / IBIZA II (6K1) / TOLEDO I (1L)

VW
GOLF II / GOLF III / GOLF III Variant / JETTA II / VENTO

VKDC 35103 T

AUDI
50

VW
DERBY / POLO (86) / POLO (86_) / POLO (86C, 80)

VKDC 35104

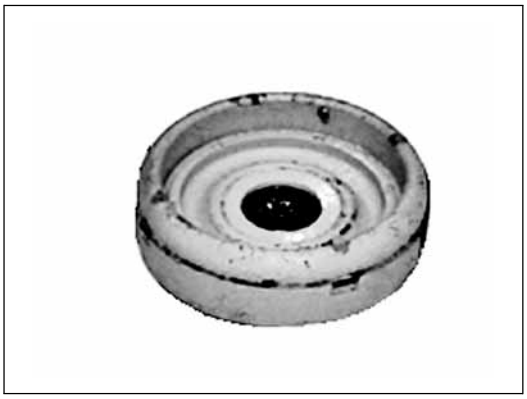

AUDI
80 (81, 85, B2) / 80 (89, 89Q, 8A, B3) / 90 / COUPE (81, 85) / QUATTRO / S2 Avant

VKDC 35105 T

VW
GOLF I / JETTA I / SCIROCCO

VKDA 35110 T

FORD
GALAXY

SEAT
ALHAMBRA / CORDOBA I (6K2/C2) / CORDOBA I (6K5) Vario / IBIZA II (6K1) / INCA / TOLEDO I (1L)

VW
CADDY II / CORRADO / GOLF III / GOLF III Variant / GOLF IV / PASSAT (3A2, 35I) / PASSAT (3A5, 35I) Variant / PASSAT (3B2) / POLO (6KV2) / POLO (6KV5) Variant / SHARAN / VENTO

VKDA 35111 T

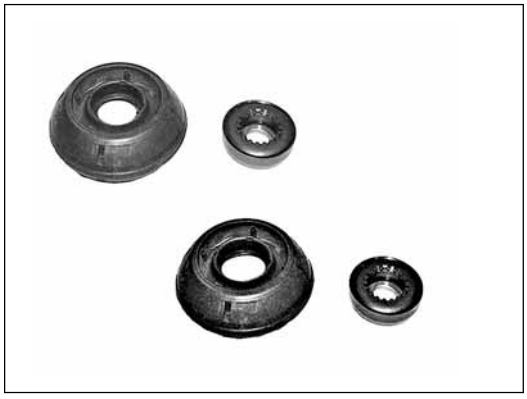

SEAT
AROSA

VW
LUPO / POLO (6N1) / POLO (86_)

VKDA 35112 T

SKODA
FAVORIT / FELICIA I / FELICIA II

VW
CADDY II Pickup

VKDA 35113 T

AUDI
A3 (8L1) / S3 / TT / TT Roadster

SEAT
LEON (1M1) / TOLEDO II (1M2)

SKODA
OCTAVIA (1U2) / OCTAVIA (1U5)

VW
BORA (1J2) / BORA (1J6) / GOLF IV / GOLF IV Variant / NEW BEETLE

VKDA 35115 T

AUDI
A2 (8Z0)

SEAT
CORDOBA I (6K5) Vario / CORDOBA II (6K2) / CORDOBA II (6K5) Vario / CORDOBA III (6L2) / IBIZA III (6K1) / IBIZA IV (6L)

SKODA
FABIA / FABIA (6Y2) / FABIA (6Y3) / FABIA (6Y5)

VW
POLO / POLO (6N2) / POLO (9N_)

VKDA 35116 T

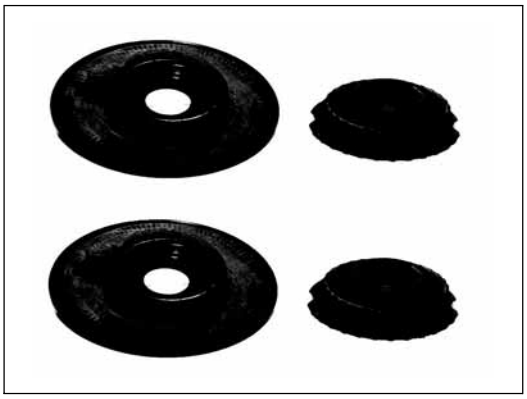

AUDI
A4 (8D2, B5) / A4 (8D5, B5) Avant / S4 / S4 Avant

VW
PASSAT (3B2) / PASSAT (3B5) Variant

VKDA 35118 T

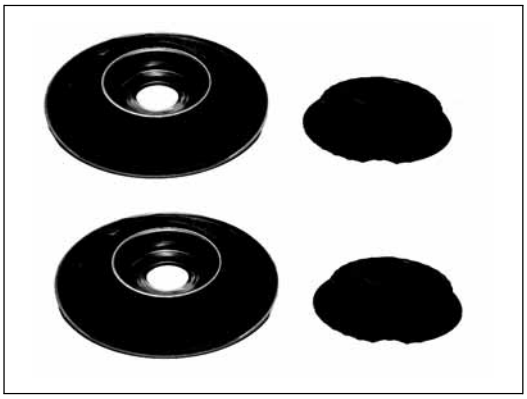

AUDI
A4 (8D2, B5) / A4 (8D5, B5) Avant / A6 (4B,C5) / A6 (4B,C5) Avant / RS4 Avant / RS6 / S4 / S4 Avant / S6 / S6 Avant

VW
PASSAT (3B2) / PASSAT (3B3) / PASSAT (3B5) Variant

VKDA 35122 T

AUDI
A3 (8P1) / A3 Sportback (8PA)

SEAT
ALTEA (5P1) / LEON (1P1) / TOLEDO III (5P2)

SKODA
OCTAVIA (1Z3) / OCTAVIA (1Z5)

VW
CADDY III / GOLF V / GOLF V PLUS / JETTA III / PASSAT (3C2) / PASSAT (3C5) Variant / TOURAN

VKDA 35123 T

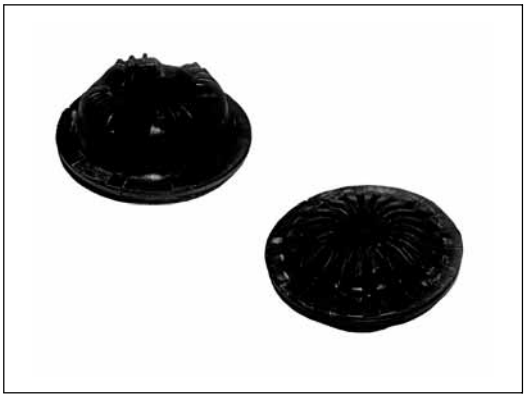

AUDI
A4 (8E2, B6) / A4 (8E5, B6) Avant / A4 (8EC) / A4 (8ED) Avant / A4 (8H7) / RS4 / S4 / S4 Avant / S4 Convertible

VKDA 35200 T

ALFA ROMEO
145 / 146 / 155

FIAT
BRAVO / COUPE / TEMPRA / TEMPRA SW / TIPO

LANCIA
DEDRA / DEDRA SW / DELTA II

VKDA 35201 T

ALFA ROMEO
33 (907A) / 33 (907B) / ALFASUD (901) / ALFASUD Sprint (902)

VKDC 35202 T

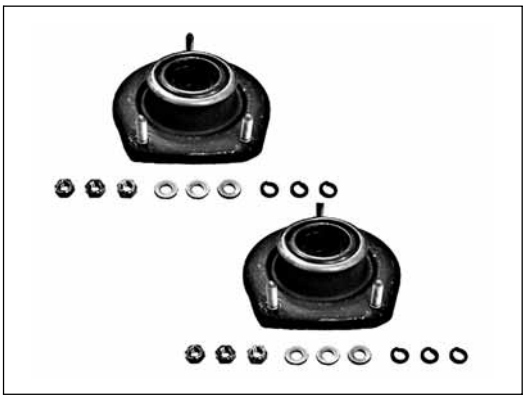

FIAT
CINQUECENTO / SEICENTO

VKDC 35203 T

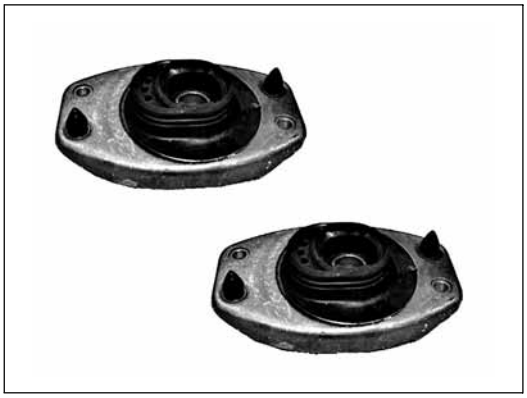

FIAT
PUNTO I

LANCIA
Y

VKDC 35204 T

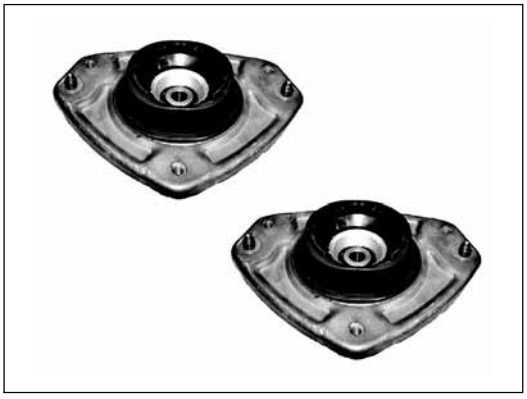

FIAT
BRAVA / BRAVO / MAREA / MAREA Weekend

VKDC 35205

LANCIA
Y

VKDC 35206

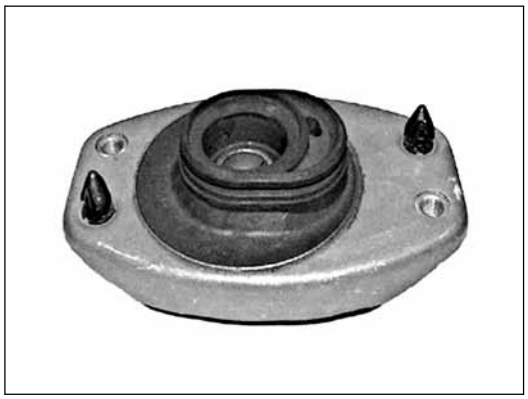

LANCIA
Y

VKDC 35207 T

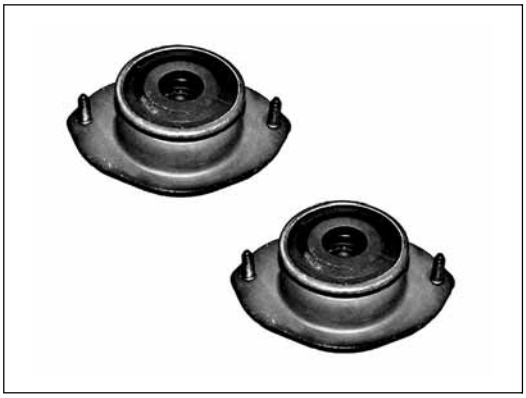

LANCIA
DELTA I / PRISMA

VKDC 35209

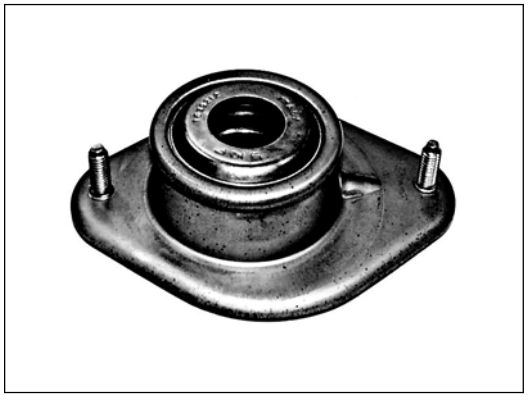

LANCIA
DELTA I / PRISMA

VKDC 35213 T

FIAT
CROMA (154)

LANCIA
THEMA

VKDC 35214 T

FIAT
CROMA (154)

LANCIA
THEMA / THEMA SW

VKDA 35220 T

FIAT
PANDA (169) / PUNTO II

VKDA 35221 T

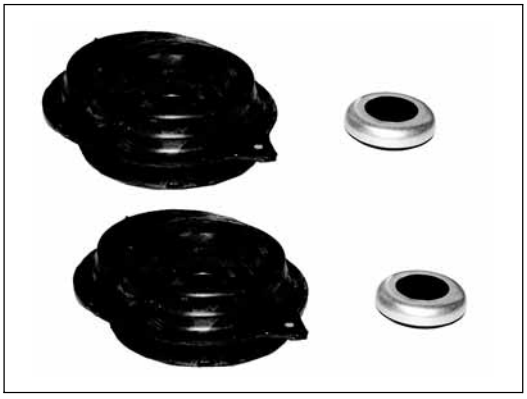

FIAT
PUNTO II

VKDA 35222 T

ALFA ROMEO
164

VKDA 35223 T

ALFA ROMEO
164

VKDA 35225 T

FIAT
IDEA / PUNTO II

LANCIA
MUSA

VKDA 35230 T

ALFA ROMEO
147 / 147 GTA / 156 / 156 GTA / 156 Sportwagon / 166 / GT

VKDC 35232 T

FIAT
DOBLO / PALIO / PALIO Weekend / SIENA / STRADA

VKDA 35233 T

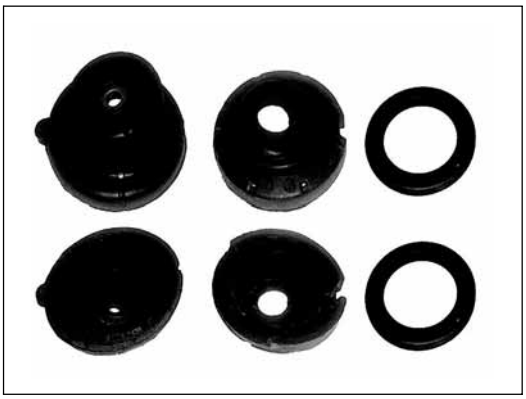

FIAT
STILO / STILO Multi Wagon

VKDA 35236 T

FIAT
MULTIPLA

VKDA 35300 T

CITROËN
AX

PEUGEOT
106 II

VKDA 35302 T

CITROËN
SAXO

PEUGEOT
106 I / 106 II

VKDA 35303 T

CITROËN
C15 / VISA

PEUGEOT
205 I / 205 II / 305 / 309 I / 309 II

VKDA 35304 T

PEUGEOT
405 I / 405 I Break / 405 II / 405 II Break

VKDA 35305 T

PEUGEOT
405 I / 405 I Break

VKDA 35306 T

CITROËN
BERLINGO / BERLINGO (MF) / XSARA / XSARA PICASSO / ZX

PEUGEOT
306 / 306 Break / PARTNER / PARTNER Minibus

VKDA 35307 T

CITROËN
BERLINGO / BERLINGO (MF) / XSARA / ZX

PEUGEOT
306 / 306 Break / PARTNER / PARTNER Minibus

VKDA 35308 T

PEUGEOT
206 / 206 CC / 206 SW

VKDA 35309 T

PEUGEOT
206

VKDA 35312 T

PEUGEOT
406 / 406 Break

VKDA 35313 T

CITROËN
JUMPER I

FIAT
DUCATO II

PEUGEOT
BOXER I

VKDA 35315 T

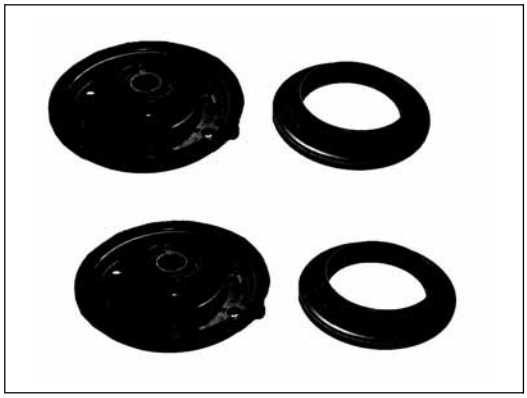

CITROËN
C4

PEUGEOT
307 / 307 CC / 307 SW

VKDA 35316 T

CITROËN
C2 / C3 / C3 Pluriel

VKDA 35317 T

CITROËN
C8 / EVASION / JUMPY

FIAT
SCUDO / ULYSSE (179AX) / ULYSSE (220)

LANCIA
PHEDRA / ZETA

PEUGEOT
806 / 807 / EXPERT

VKDA 35319 T

PEUGEOT
605 / 607

VKDA 35321 T

CITROËN
JUMPER II

FIAT
DUCATO III

PEUGEOT
BOXER II

VKDA 35400 T

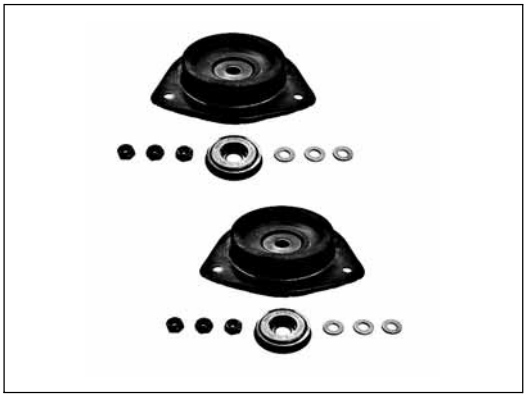

FORD
SCORPIO I

VKDA 35401 T

FORD
ESCORT V, VI / ORION III

VKDA 35402 T

FORD
COUGAR / MONDEO I / MONDEO II

VKDA 35403 T

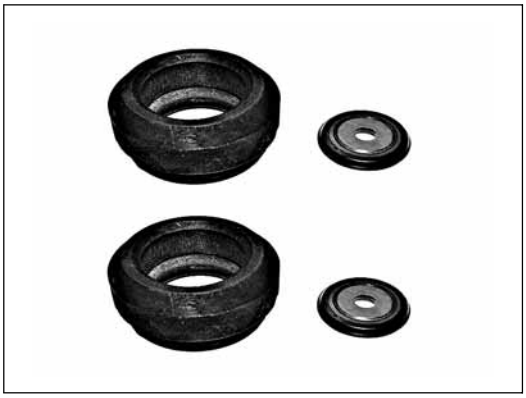

FORD
ESCORT III / ESCORT IV / FIESTA II / FIESTA III / ORION I / ORION II / P 100 II / SIERRA

VKDA 35405 T

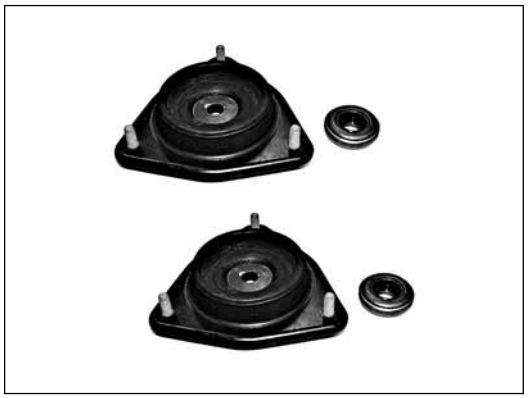

FORD
ESCORT VII / ESCORT VII CLASSIC

VKDA 35406 T

FORD
ESCORT V, VI / ESCORT VII / FIESTA III

VKDA 35407 T

FORD
FIESTA II / FIESTA III / FIESTA IV / KA / PUMA / STREET KA

VKDA 35409 T

FORD
ESCORT III / FIESTA II / ORION I

VKDA 35415 T

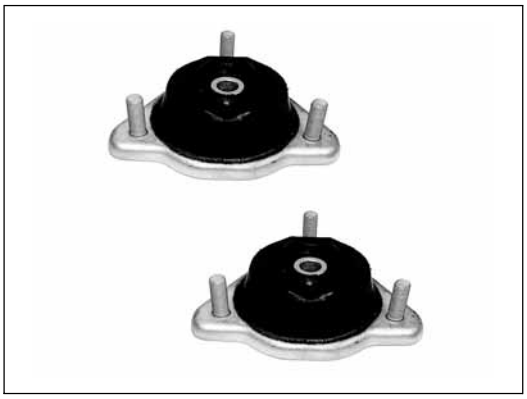

FORD
TRANSIT I

VKDA 35416 T

FORD
SCORPIO I

VKDA 35417 T

FORD
FOCUS I

VKDA 35418 T

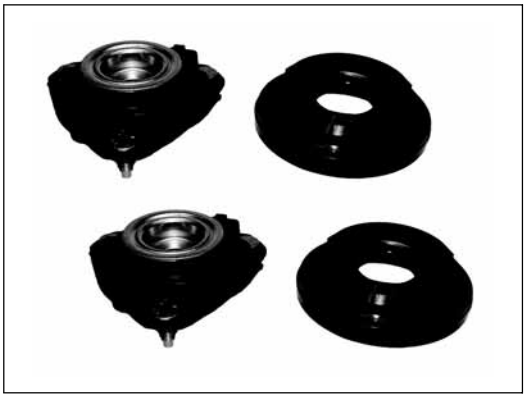

FORD
MONDEO III

VKDC 35420 T

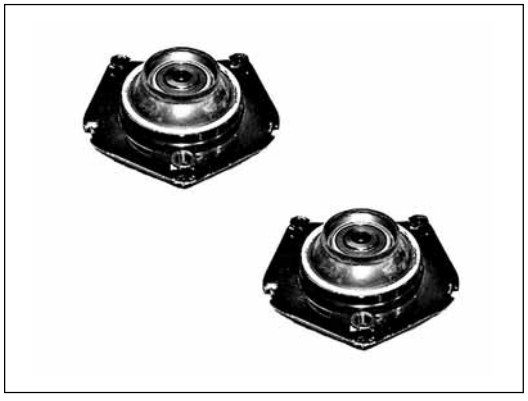

SAAB
9000

VKDA 35423 T

FORD
TRANSIT II

VKDA 35424 T

FORD
FIESTA V / FUSION

VKDA 35425 T

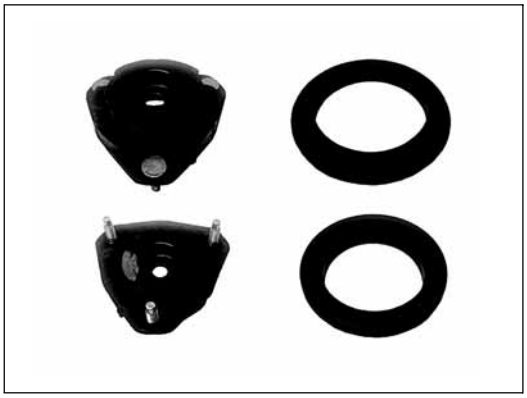

FORD
FOCUS I

VKDA 35500 T

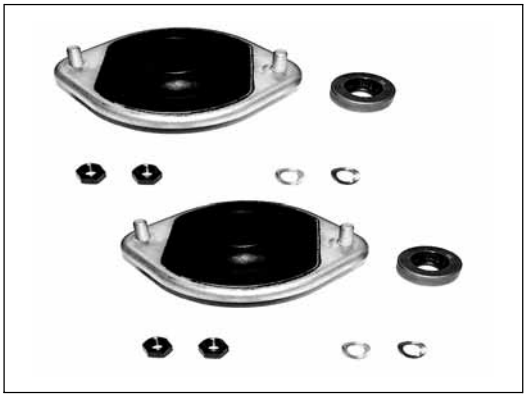

OPEL
CORSA B / TIGRA

VAUXHALL
CORSA Mk I / CORSAVAN Mk I / TIGRA

VKDA 35501 T

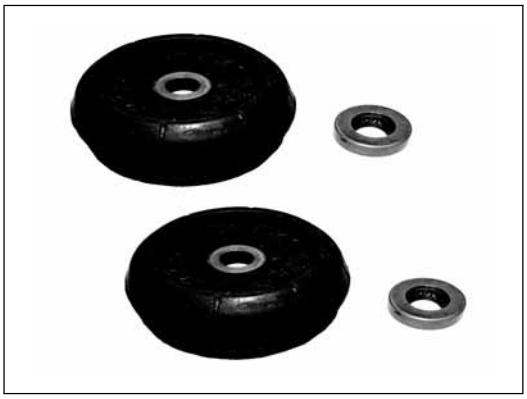

OPEL
CALIBRA / VECTRA A

VAUXHALL
CALIBRA / CAVALIER Mk III

VKDA 35503 T

OPEL
ASTRA F

VAUXHALL
ASTRA Mk III

VKDC 35504 T

OPEL
KADETT E

VAUXHALL
ASTRA Mk II

VKDC 35505 T

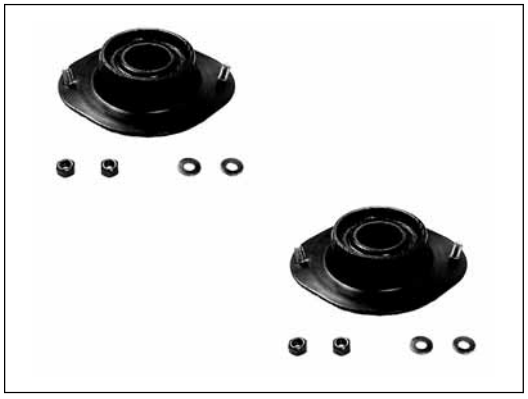

DAEWOO
ESPERO / NEXIA

OPEL
KADETT E / KADETT E (E35)

VAUXHALL
ASTRA Mk II

VKDA 35508 T

OPEL
ASTRA G / CORSA C / TIGRA TwinTop / VECTRA B / ZAFIRA A

VAUXHALL
ASTRA Mk IV / CORSA Mk II / CORSAVAN Mk II / TIGRA TwinTop / VECTRA Mk I / ZAFIRA

VKDA 35509 T

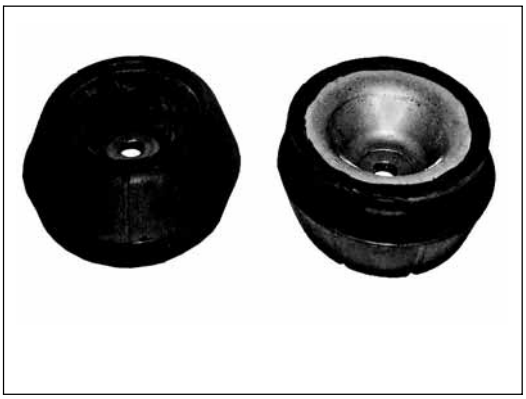

OPEL
COMBO / COMBO Tour / MERIVA / VECTRA B

VAUXHALL
COMBO / MERIVA / VECTRA Mk I

VKDA 35510 T

OPEL
OMEGA A / OMEGA B / SENATOR B

VAUXHALL
CARLTON Mk III / OMEGA / SENATOR

VKDA 35511 T

OPEL
OMEGA A / OMEGA B / SENATOR B

VAUXHALL
CARLTON Mk III / OMEGA / SENATOR

VKDA 35513 T

OPEL
ASCONA C

VKDA 35515 T

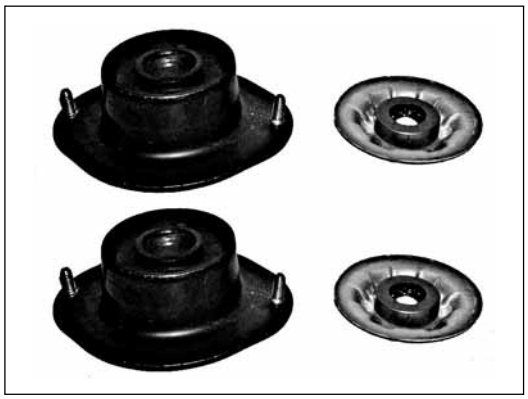

OPEL
ASTRA F

VAUXHALL
ASTRA Mk III

VKDA 35520 T

SAAB
9-3 I

VKDA 35521 T

SAAB
9-5

VKDA 35600 T

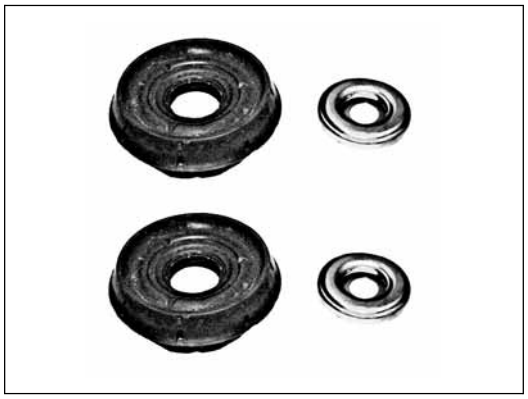

RENAULT
CLIO I / TWINGO

VKDA 35601 T

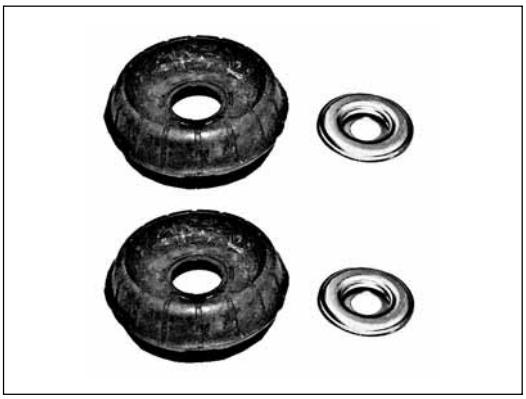

RENAULT
CLIO I

VKDA 35602 T

RENAULT
EXPRESS/EXTRA/RAPID / SUPER 5

VKDA 35603 T

RENAULT
R21

VKDA 35604 T

RENAULT
R21

VKDA 35605 T

RENAULT
R21

VKDA 35607 T

RENAULT
CLIO II / KANGOO

VKDA 35608 T

VOLVO
740 / 760 / 940 I / 940 II / 960 I / 960 II / S90 / V90

VKDC 35611 T

VOLVO
240 / 260

VKDC 35613 T

VOLVO
S40 I / V40

VKDA 35615 T

RENAULT
MEGANE I / MEGANE I Scenic / R19 I / R19 II / SCENIC I

VKDA 35616 T

RENAULT
R19 I / R19 II

VKDA 35619 T

RENAULT
LAGUNA II

VKDA 35620 T

RENAULT
AVANTIME / ESPACE III

VKDA 35622 T

OPEL
VIVARO

RENAULT
TRAFIC II

VAUXHALL
VIVARO

VKDA 35623 T

RENAULT
LAGUNA I

VKDA 35625 T

RENAULT
GRAND SCENIC / MEGANE II / MEGANE II CC / SCENIC II

VKDA 35626 T

RENAULT
ESPACE IV / LAGUNA II / VEL SATIS

VKDC 35627 T

VOLVO
S60 / S80 / V70 II / XC70 CROSS COUNTRY

VKDA 35630 T

VOLVO
S40 I / V40

VKDA 35631 T

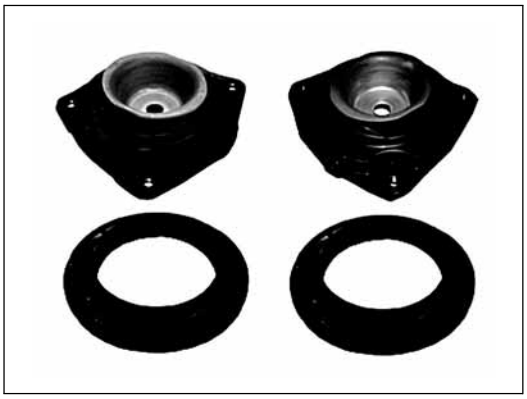

NISSAN
MICRA / MICRA C+C

RENAULT
CLIO III / MODUS

VKDA 35633 T

DACIA
LOGAN

VKDC 35634 T

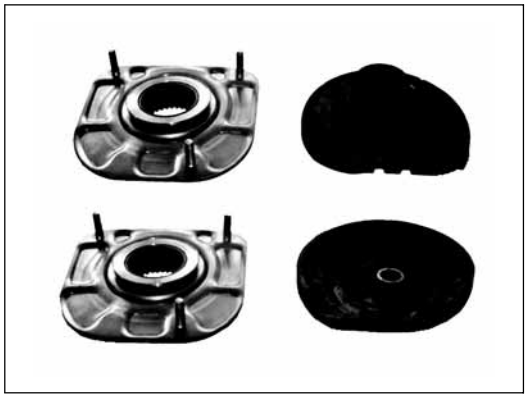

VOLVO
850 / C70 / S70 / S80 / V70 I / V70 II

VKDA 35702 T

SEAT
IBIZA I (021A) / MALAGA / MARBELLA

VKDC 35703 T

MG
MG ZR

ROVER
200 (RF) / 200 (XW) / 25 / 400 (XW) Tourer

VKDA 35705 T

MG
MG ZS

ROVER
400 (RT) / 45 (RT)

VKDC 35709 T

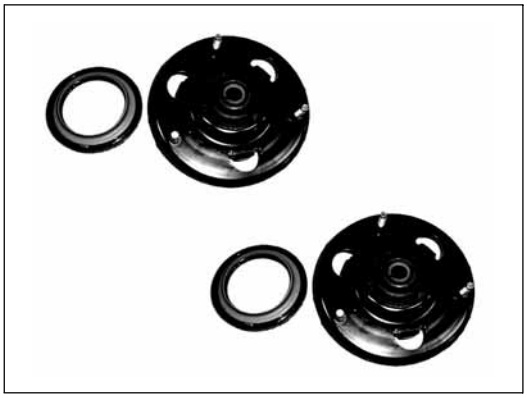

MG
MG ZT / MG ZT- T

ROVER
75 (RJ) / 75 (RJ) Tourer

VKDC 35801 T

BMW
3 (E30) / 3 (E30) Touring / 5 (E28) / 5 (E34) / 5 (E34) Touring / 6 (E24) / M3 (E30) / M3 (E30) Convertible / M5 (E28) / Z1

VKDC 35802 T

BMW
3 (E36) / 3 (E36) Compact / 3 (E36) Touring / Z3 / Z4

VKDA 35810 T

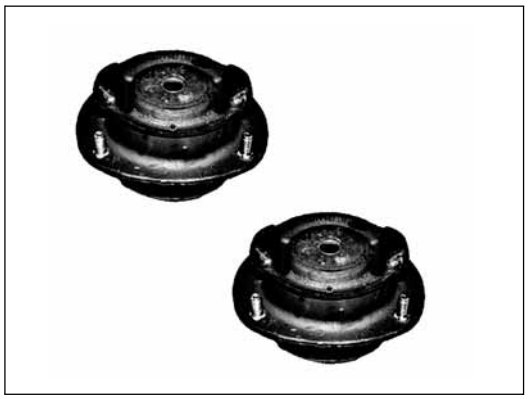

MERCEDES BENZ
190

VKDA 35811 T

MERCEDES BENZ
E-class (124)

VKDA 35813 T

MERCEDES BENZ
V-class / VITO

VKDC 35814 T

BMW
1 (E87) / 3 (E46) / 3 (E46) Compact / 3 (E46) Touring / 3 (E90) / 3 (E91) Touring / 5 (E39) / 5 (E39) Touring / 5 (E60) / 5 (E61) Touring / 6 (E63) / 6 (E64) / X3

VKDC 35815 T

BMW
5 (E39) / 5 (E39) Touring

VKDC 35820 T

BMW
3 (E21)

VKDC 35821 T

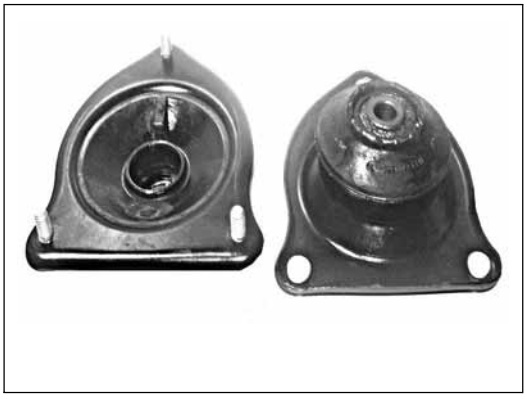

MINI
MINI

VKDA 37200 T

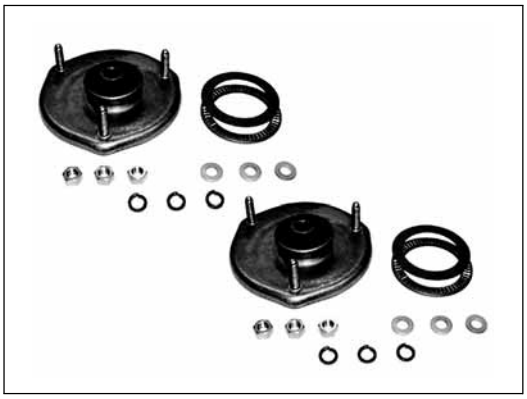

LANCIA
Y10

VKDA 37201 T

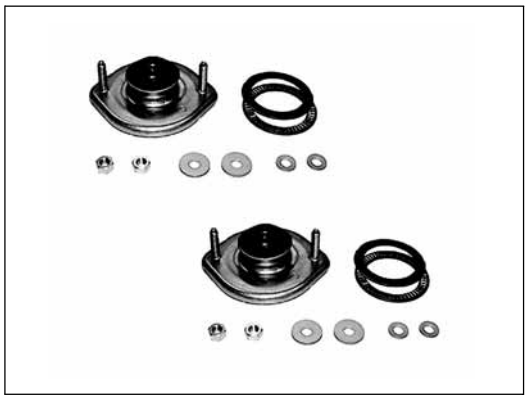

FIAT
PANDA / PANDA (141A_) / RITMO Bertone / RITMO I

SEAT
IBIZA I (021A) / MALAGA / MARBELLA / RONDA / TERRA

VKDA 37202 T

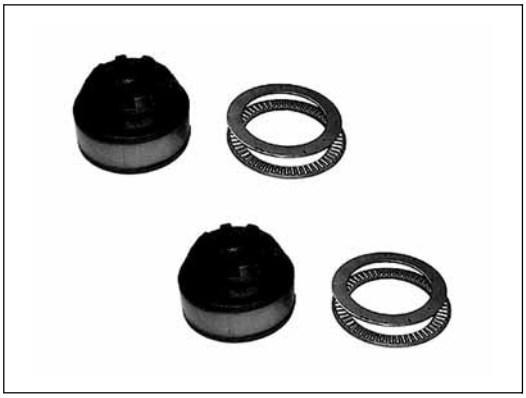

FIAT
UNO

VKDA 37203 T

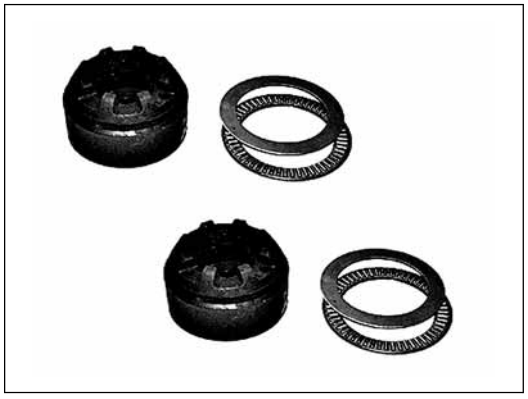

FIAT
DUNA / DUNA Weekend / FIORINO (146) / FIORINO (147)

VKDA 37204 T

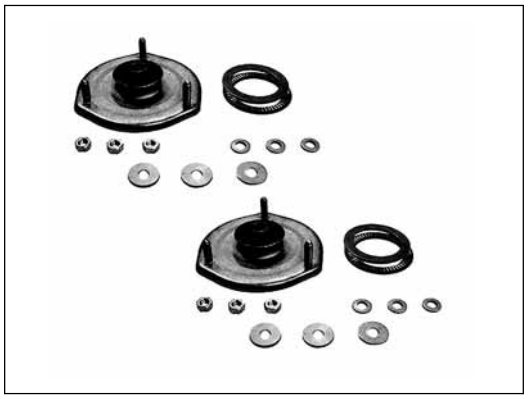

FIAT
REGATA / REGATA Weekend / RITMO Bertone / RITMO I / RITMO II

VKDA 40101 T

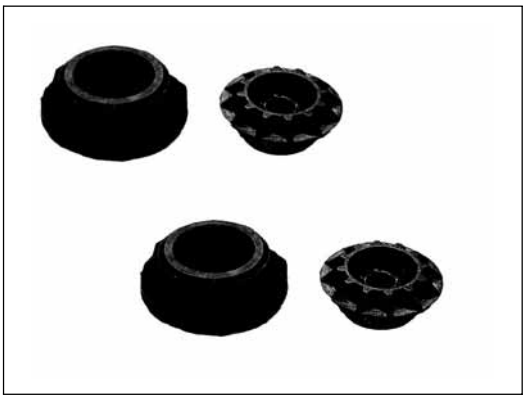

SEAT
CORDOBA I (6K2/C2) / CORDOBA I (6K5) Vario / CORDOBA II (6K2) / CORDOBA II (6K5) Vario / IBIZA II (6K1) / IBIZA III (6K1) / TOLEDO I (1L)

VW
CORRADO / GOLF II / GOLF III / GOLF III Variant / GOLF IV / JETTA II / POLO (6KV2) / POLO (6KV5) Variant / POLO (6N1) / POLO (6N2) / POLO (86_) / VENTO

VKDA 40102 T

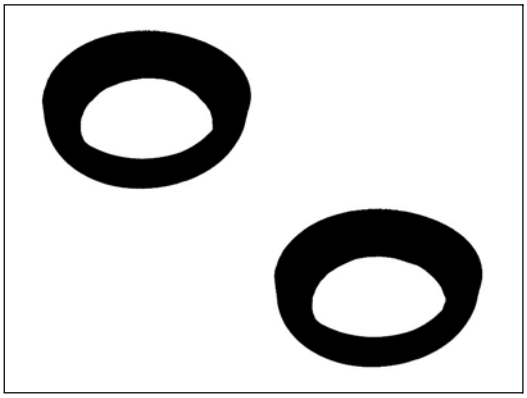

AUDI
50

VW
DERBY / POLO (86) / POLO (86C, 80)

VKDA 40104 T

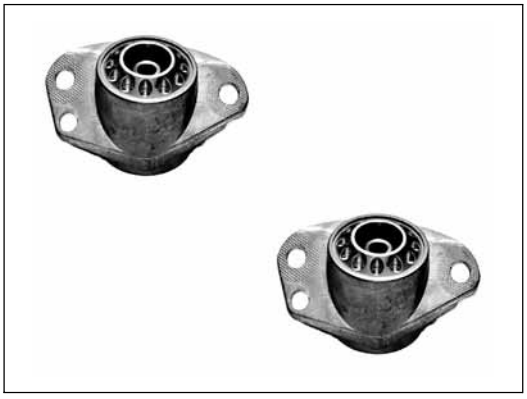

AUDI
A3 (8L1) / TT / TT Roadster

SEAT
CORDOBA III (6L2) / IBIZA IV (6L) / LEON (1M1) / TOLEDO II (1M2)

SKODA
FABIA / FABIA (6Y2) / FABIA (6Y3) / FABIA (6Y5) / OCTAVIA (1U2) / OCTAVIA (1U5)

VW
BORA (1J2) / GOLF IV / NEW BEETLE / POLO / POLO (9N_)

VKDA 40109 T

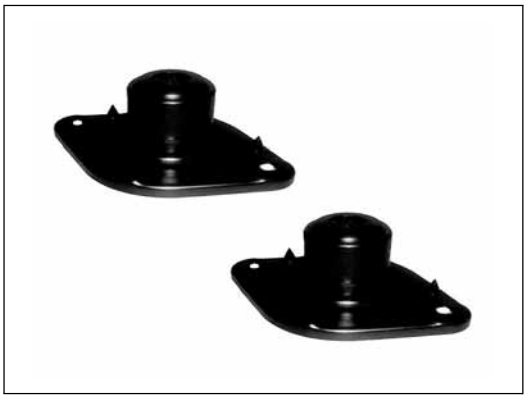

VW
PASSAT (3B2) / PASSAT (3B3) / PASSAT (3B5) Variant

VKDA 40110 T

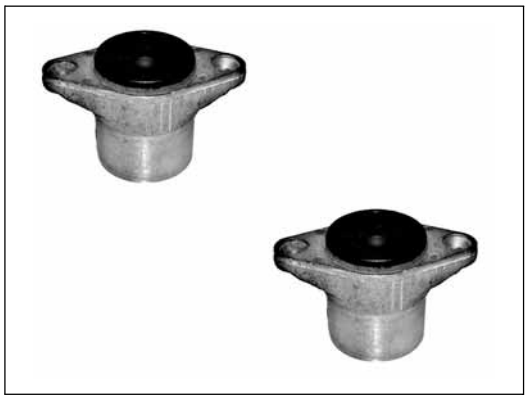

AUDI
A6 (4B,C5) / A6 (4B,C5) Avant

VW
PASSAT (3B2) / PASSAT (3B3) / PASSAT (3B5) Variant

VKDA 40111 T

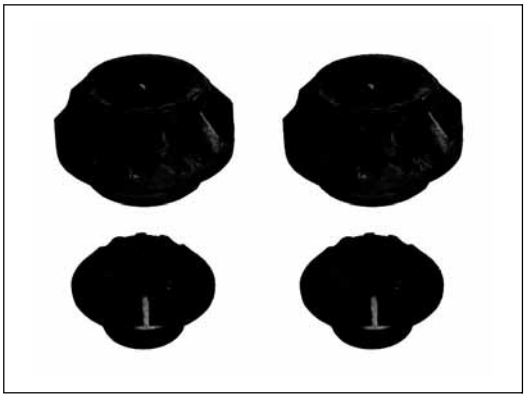

SKODA
FAVORIT / FELICIA I / FELICIA II

VKDA 40113 T

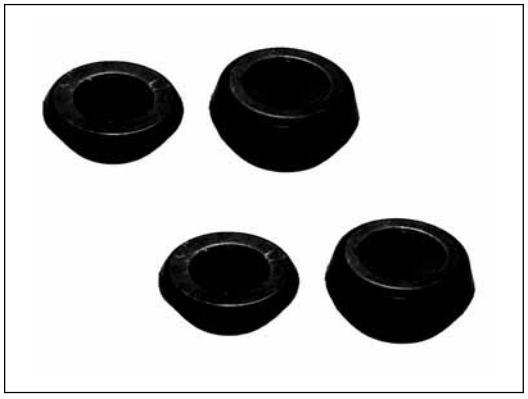

AUDI
80 (8C, B4) / 80 (8C, B4) Avant

VKDA 40121 T

AUDI
A4 (8D2, B5) / A4 (8D5, B5) Avant

VKDA 40122 T

AUDI
A4 (8D2, B5) / A4 (8D5, B5) Avant

VKDA 40123 T

AUDI
A2 (8Z0)

SEAT
CORDOBA III (6L2) / IBIZA IV (6L) / LEON (1M1) / TOLEDO II (1M2)

SKODA
OCTAVIA (1U5)

VW
BORA (1J2) / BORA (1J6) / GOLF IV / GOLF IV Variant / NEW BEETLE

VKDA 40124 T

SEAT
ALTEA (5P1) / LEON (1P1) / TOLEDO III (5P2)

VW
GOLF V / GOLF V PLUS

VKDA 40125 T

AUDI
A3 (8P1) / A3 Sportback (8PA)

VW
GOLF V / JETTA III

VKDA 40126 T

SKODA
OCTAVIA (1Z3) / OCTAVIA (1Z5)

VW
TOURAN

VKDA 40128 T

SKODA
SUPERB

VW
PASSAT (3B3) / PASSAT (3B6)

VKDA 40129 T

AUDI
A4 (8E2, B6) / A4 (8E5, B6) Avant / A4 (8H7) / S4 / S4 Avant / S4 Convertible

VKDA 40204 T

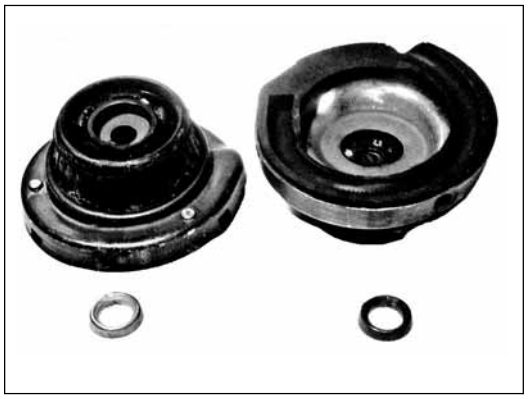

ALFA ROMEO
156

VKDA 40208 T

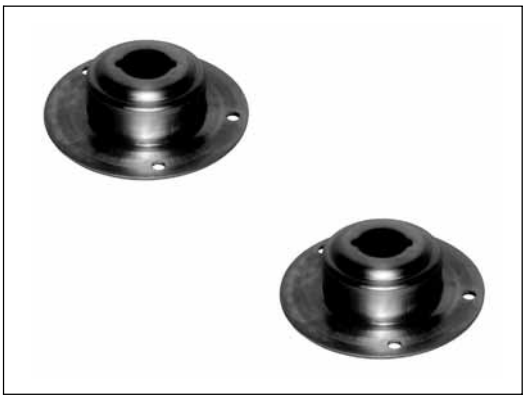

ALFA ROMEO
164

FIAT
CROMA (154)

LANCIA
THEMA

VKDA 40218 T

FIAT
UNO

VKDA 40219 T

FIAT
UNO

VKDA 40300 T

PEUGEOT
406 / 406 Break

VKDA 40302 T

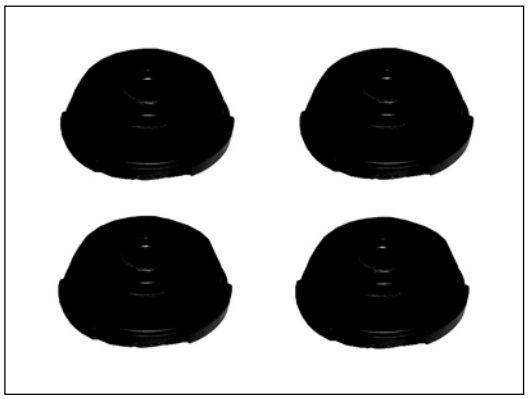

PEUGEOT
406

VKDA 40304 T

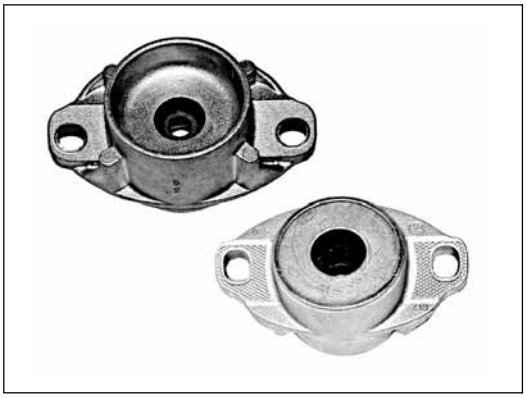

PEUGEOT
307 / 307 CC / 307 SW

VKDA 40400 T

FORD
COUGAR / MONDEO I / MONDEO II

VKDA 40401 T

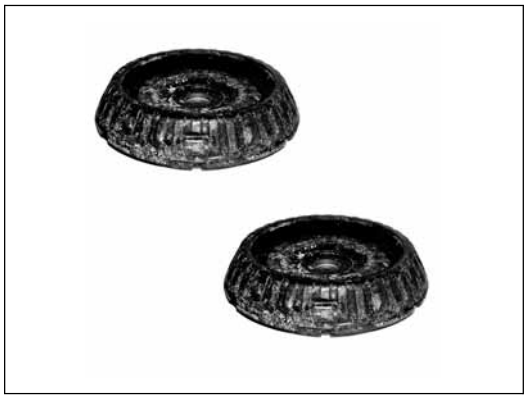

FORD
FIESTA IV / KA / PUMA

VKDA 40404 T

FORD
FOCUS I

VKDA 40407 T

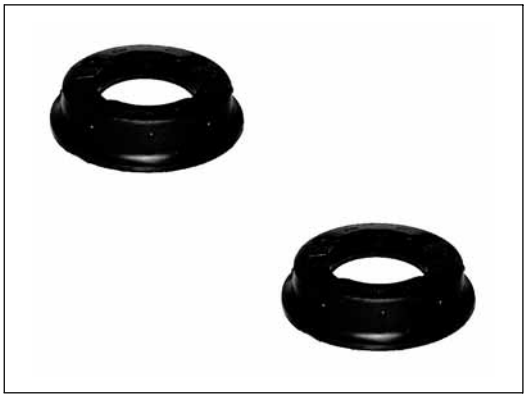

FORD
ESCORT V, VI / ESCORT VII / FIESTA III / ORION III

VKDA 40415 T

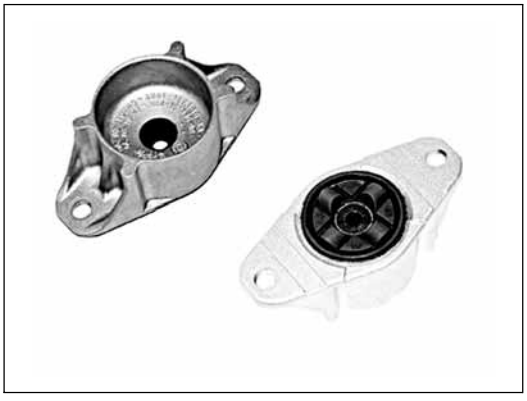

FORD
FOCUS II / FOCUS II C-MAX

VKDA 40416 T

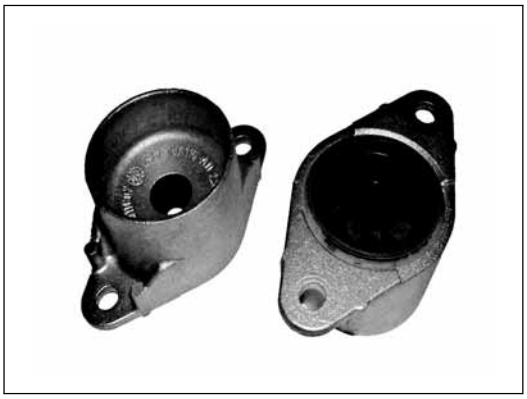

FORD
FIESTA V / FUSION

VKDA 40600 T

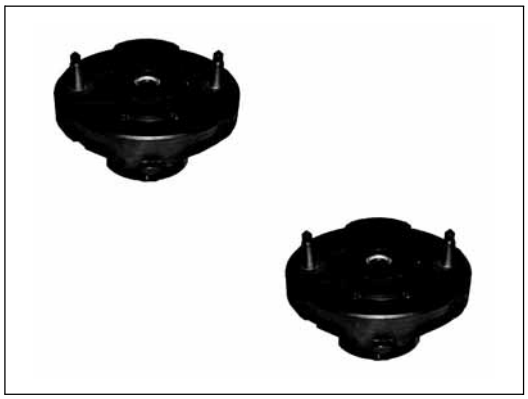

RENAULT
TWINGO

VKDA 40610 T

VOLVO
850 / C70 / S70 / V70 I

VKDA 40611 T

VOLVO
850 / C70 / S70 / V70 I

VKDA 40614 T

VOLVO
S40 I / V40

VKDA 40616 T

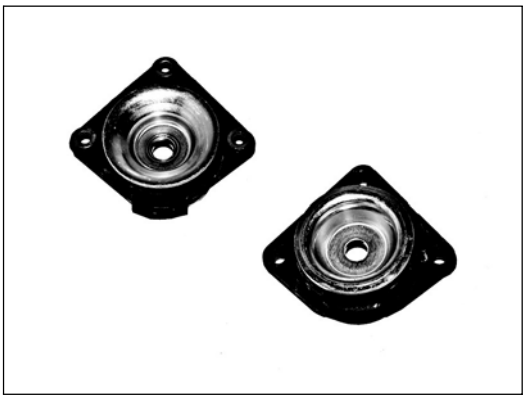

VOLVO
S60 / S80 / V70 II

VKDA 40700 T

MG
MG ZR / MG ZT / MG ZT- T

ROVER
200 (RF) / 200 (XW) / 25 / 400 (RT) / 400 (XW) / 400 (XW) Tourer / 45 (RT)

VKDA 40802 T

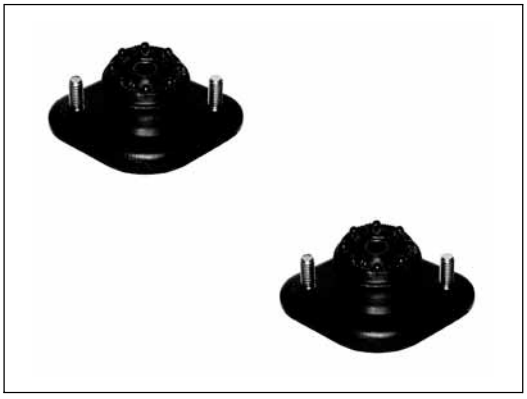

BMW
3 (E30) / 3 (E30) Touring

VKDA 40805 T

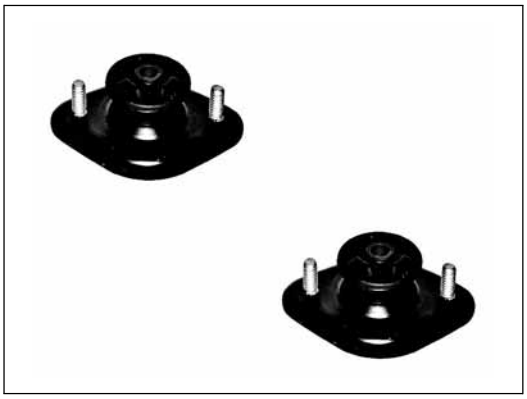

BMW
3 (E36) / 3 (E36) Compact / 3 (E36) Touring / 3 (E46) / 3 (E46) Compact / 3 (E46) Touring / Z3

VKDA 40809 T

BMW
5 (E34) / 5 (E34) Touring / M5 (E34)

VKDA 40813 T

BMW
7 (E38)

VKDA 40815 T

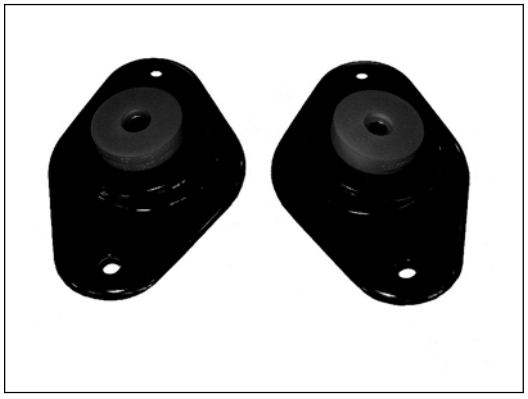

MINI
MINI

VKDC 81102 T

TOYOTA
CARINA E

VKDC 81103 T

TOYOTA
COROLLA

VKDC 81104 T

TOYOTA
COROLLA

VKDC 81105 T

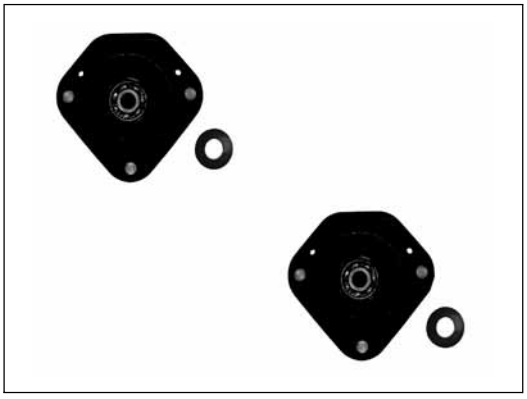

TOYOTA
CAMRY / COROLLA

VKDC 81112 T

TOYOTA
AVENSIS (_T22_)

VKDC 81201 T

NISSAN
BLUEBIRD / MAXIMA / STANZA

VKDA 81501 T

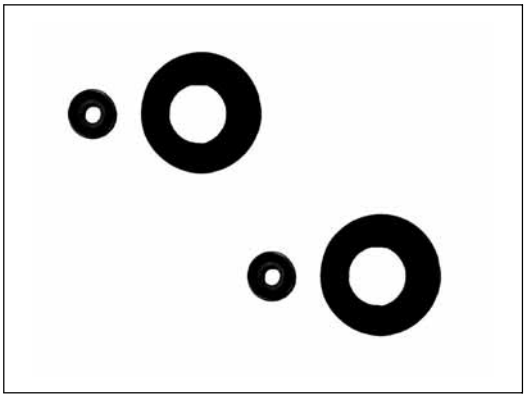

MITSUBISHI
COLT / LANCER

VKDA 81502 T

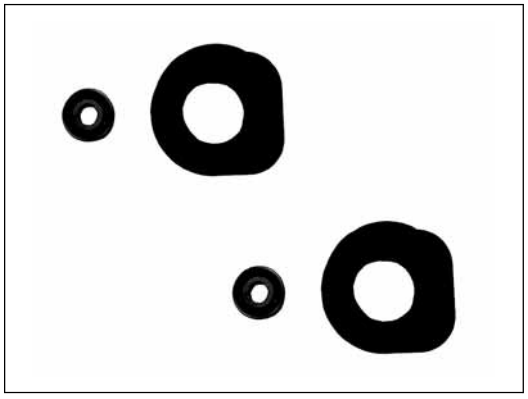

MITSUBISHI
COLT / LANCER

VKDC 81503 T

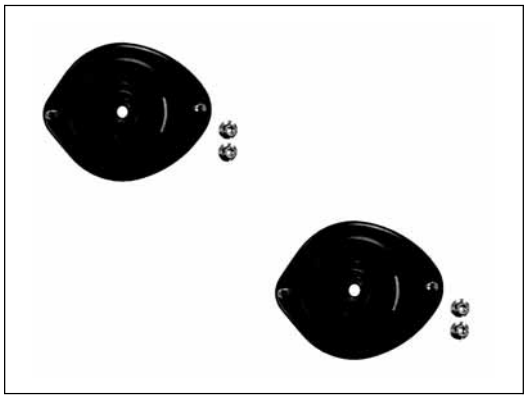

HYUNDAI
ELANTRA / LANTRA

MITSUBISHI
COLT / LANCER / MIRAGE

VKDC 81504 T

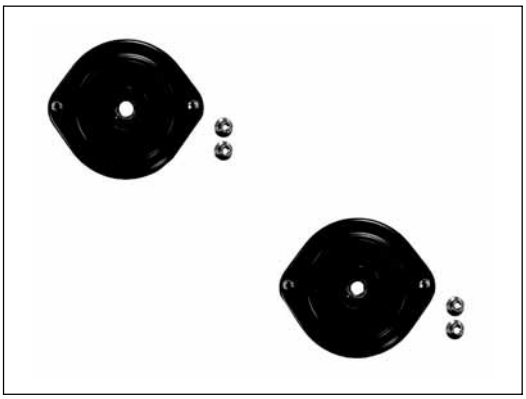

MITSUBISHI
COLT / LANCER / MIRAGE

PROTON
SATRIA / WIRA

VKDC 81505 T

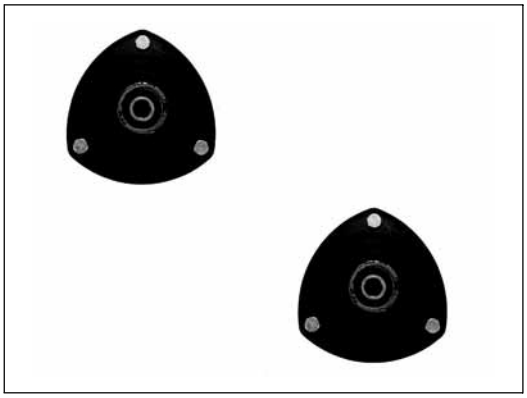

HYUNDAI
SANTAMO

MITSUBISHI
SANTAMO / SPACE WAGON

VKDA 88202 T

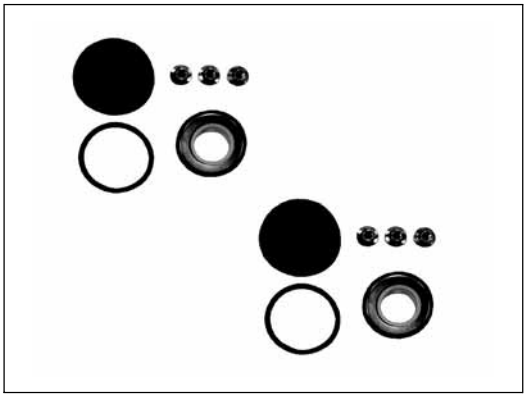

NISSAN
PULSAR / SUNNY

VKDA 88203 T

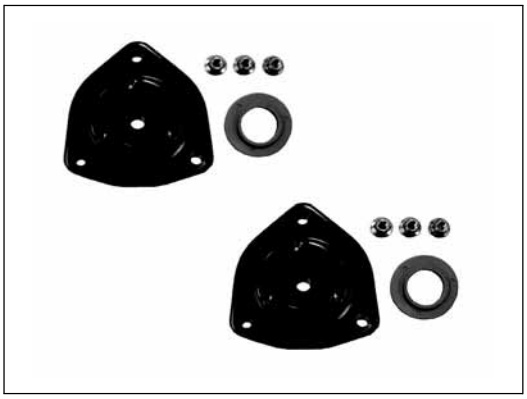

NISSAN
ALMERA / SUNNY

VKDA 88204 T

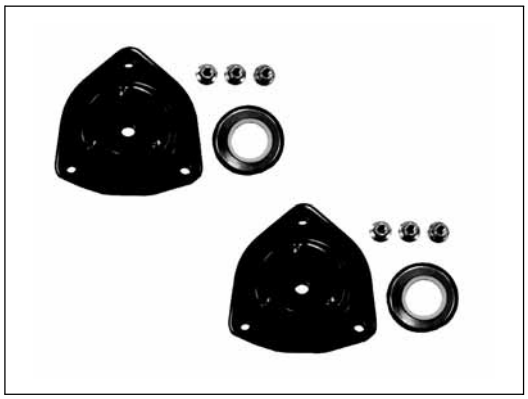

NISSAN
SUNNY

VKDA 88205 T

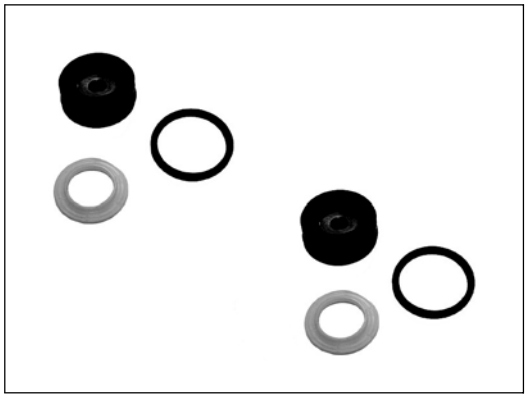

NISSAN
MICRA

VKDA 88401 T

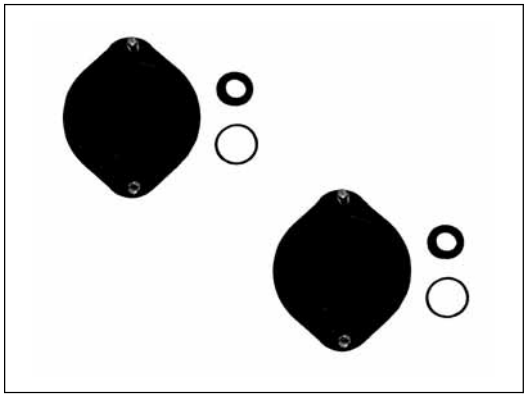

FORD
FESTIVA

KIA
PRIDE

MAZDA
121

VKDA 88402 T

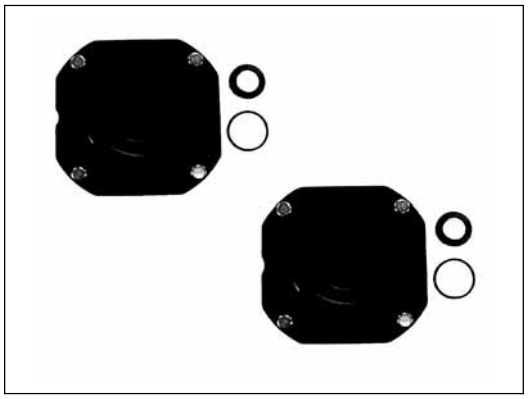

KIA
CAPITAL / CONCORD

MAZDA
626

VKDA 88404 T

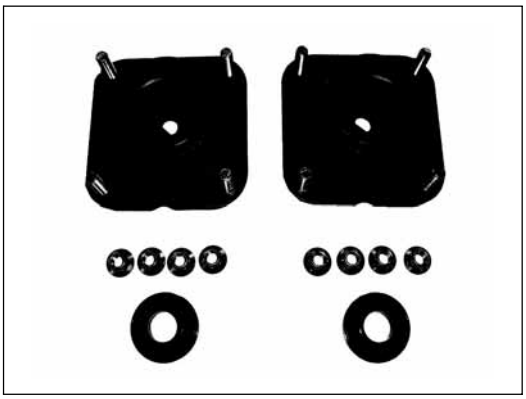

MAZDA
626

VKDP 31200 T

FIAT
PUNTO I

VKDP 31400 T

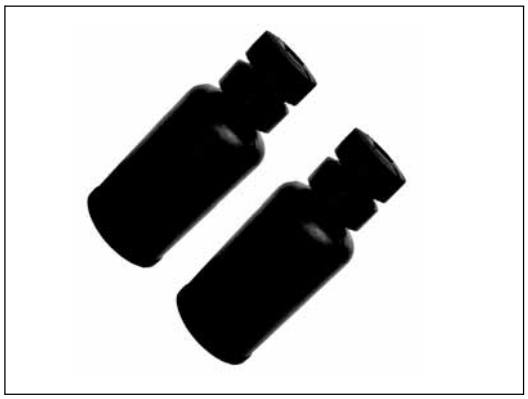

FIAT
REGATA / REGATA Weekend / RITMO Bertone / RITMO I / RITMO II / UNO

FORD
ESCORT III / ESCORT IV / ESCORT V, VI / FIESTA I / FIESTA II / FIESTA III / ORION I / ORION II

LANCIA
Y10

VKDP 31600 T

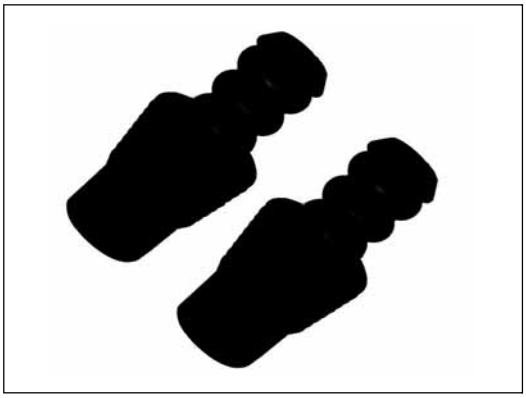

RENAULT
TWINGO

VKDP 31601 T

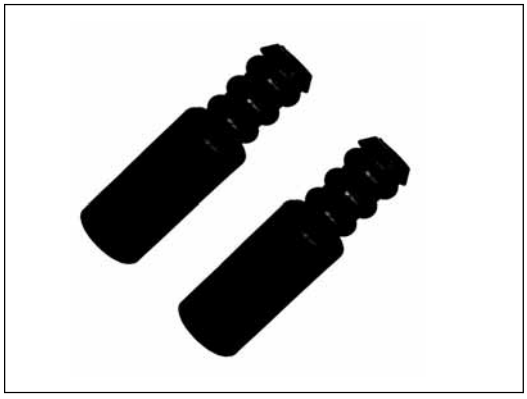

RENAULT
CLIO I / CLIO II / KANGOO

VKDP 31602 T

RENAULT
LAGUNA II

VKDP 31603 T

RENAULT
MEGANE II / MEGANE II CC / SCENIC II

VKDP 31606 T

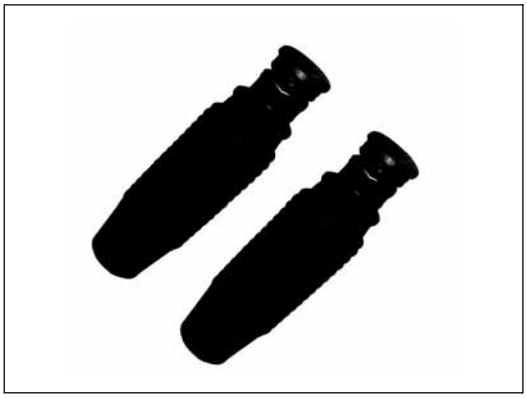

RENAULT
EXPRESS/EXTRA/RAPID / SUPER 5

VKDP 31609 T

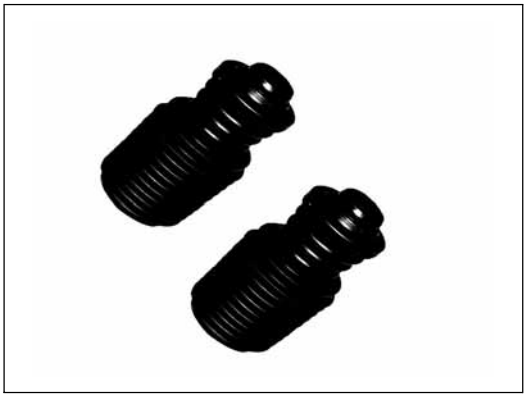

RENAULT
ESPACE IV / VEL SATIS

VKDP 32103 T

AUDI
50 / 80 (81, 85, B2) / 80 (89, 89Q, 8A, B3) / 80 (8C, B4) / 80 (8C, B4) Avant / 90 / COUPE (81, 85) / COUPE (89, 8B)

SEAT
IBIZA I (021A) / MALAGA

VKDP 32301 T

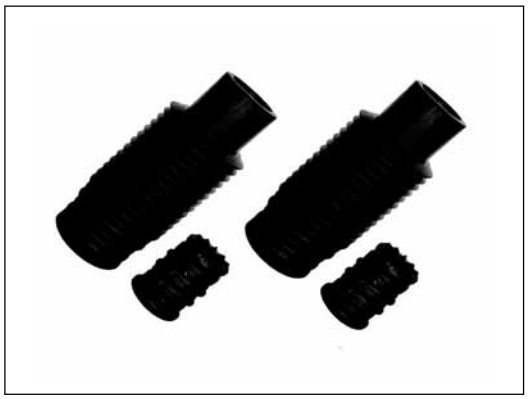

PEUGEOT
206

VKDP 32302 T

PEUGEOT
406 / 406 Break

VKDP 32600 T

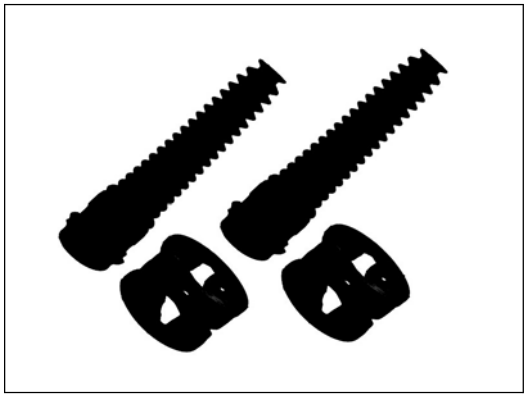

RENAULT
MEGANE I / MEGANE I Scenic / R11 / R19 I / R19 II / R9 / SCENIC I

VKDP 32601 T

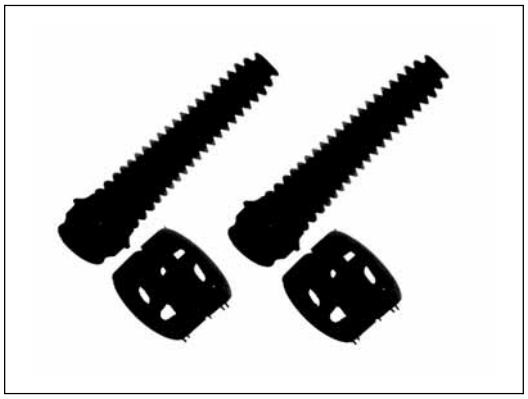

RENAULT
AVANTIME / ESPACE III / LAGUNA I

VKDP 32602 T

RENAULT
R21

VKDP 33100 T

SEAT
CORDOBA I (6K2/C2) / CORDOBA II (6K2) / IBIZA II (6K1) / IBIZA III (6K1)

VW
CADDY I / CADDY II Pickup / CORRADO / GOLF I / GOLF II / GOLF III / GOLF IV / JETTA I / JETTA II / PASSAT (32B) / PASSAT (32B) Variant / PASSAT (3A2, 35I) / PASSAT (3A5, 35I) Variant / POLO (6KV2) / POLO (6KV5) Variant / SANTANA / SCIROCCO

VKDP 33101 T

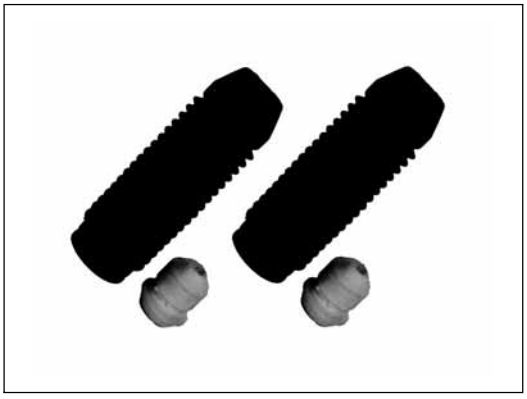

AUDI
A3 (8L1)

SEAT
LEON (1M1) / TOLEDO II (1M2)

SKODA
OCTAVIA (1U2) / OCTAVIA (1U5)

VW
BORA (1J2) / BORA (1J6) / GOLF IV / GOLF IV Variant / NEW BEETLE

VKDP 33102 T

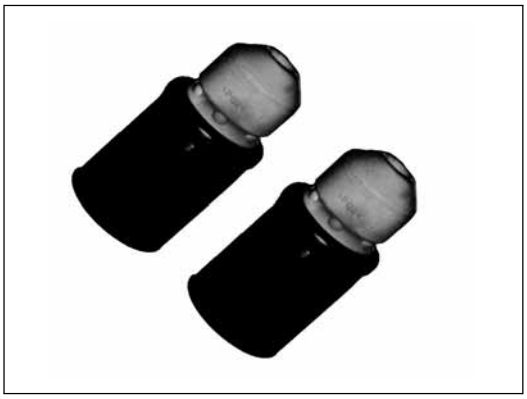

VW
DERBY / POLO (86) / POLO (86C, 80)

VKDP 33104 T

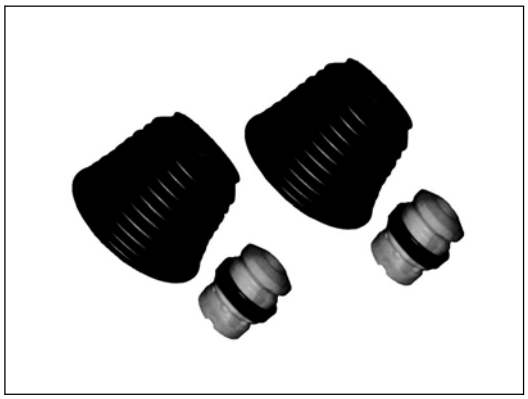

AUDI
100 III / 100 III Avant / 100 IV / 100 IV Avant / 200 (44, 44Q) / 200 Avant (44, 44Q) / A6 (4A, C4) / A6 (4A, C4) Avant

VKDP 33107 T

MAZDA
DEMIO

SEAT
AROSA

VW
LUPO / POLO (6N1) / VENTO

VKDP 33108 T

LADA
FORMA / SAMARA

SEAT
CORDOBA I (6K2/C2) / IBIZA II (6K1)

VW
GOLF III / GOLF III Variant / PASSAT (3A2, 35I) / PASSAT (3A5, 35I) Variant

VKDP 33110 T

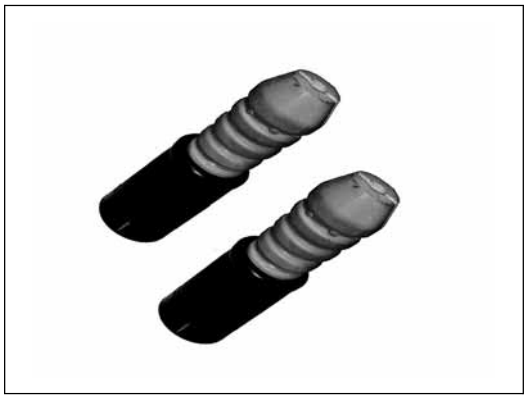

SKODA
FELICIA I / FELICIA II

VKDP 33111 T

AUDI
A4 (8D2, B5) / A4 (8D5, B5) Avant / A4 (8E2, B6) / A4 (8E5, B6) Avant / A4 (8EC) / A4 (8H7) / A6 (4B,C5) / A6 (4B,C5) Avant

VW
PASSAT (3B2) / PASSAT (3B3) / PASSAT (3B5) Variant / PASSAT (3B6)

VKDP 33202 T

FIAT
TEMPRA / TEMPRA SW / TIPO

LANCIA
DEDRA / DEDRA SW / DELTA II

VKDP 33203 T

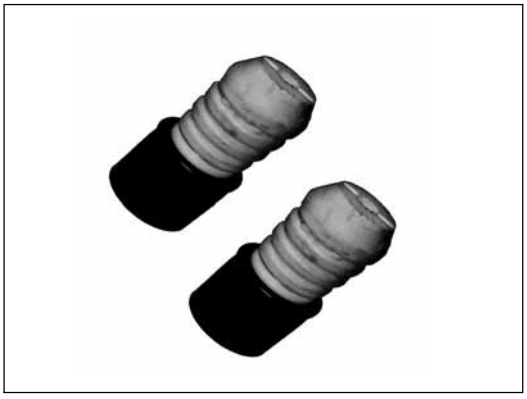

FIAT
CINQUECENTO / SEICENTO

SKODA
FAVORIT

VKDP 33207 T

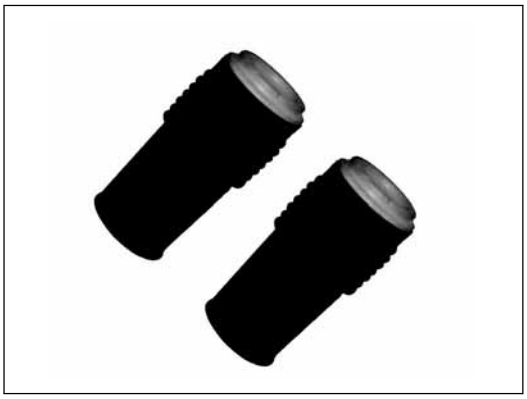

ALFA ROMEO
147 / 156 / 156 Sportwagon / GT

VKDP 33208 T

FIAT
STILO

VKDP 33300 T

CITROËN
BERLINGO / BERLINGO (MF) / C15 / VISA / XSARA / XSARA PICASSO / ZX

FIAT
BRAVA / BRAVO

PEUGEOT
106 I / 106 II / 205 I / 205 II / 306 / 306 Break / 309 I / 309 II / 405 I / 405 I Break / 405 II / 405 II Break / PARTNER / PARTNER Minibus

VKDP 33301 T

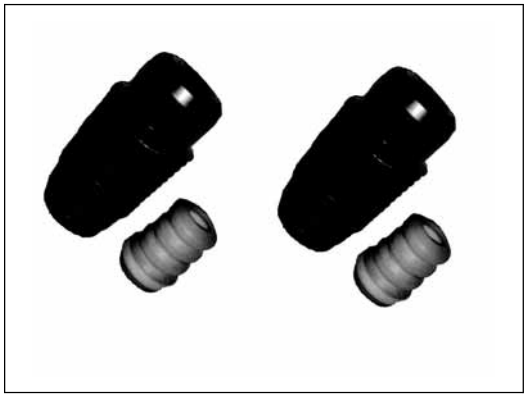

CITROËN
EVASION / JUMPY

FIAT
SCUDO / ULYSSE (220)

LANCIA
ZETA

PEUGEOT
806 / EXPERT

VKDP 33303 T

PEUGEOT
206

VKDP 33304 T

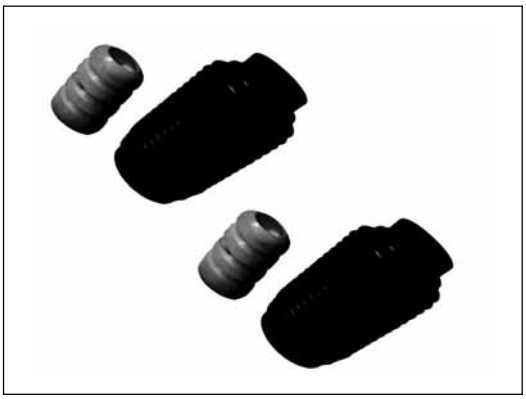

CITROËN
C4

PEUGEOT
307 / 307 CC / 307 SW

VKDP 33306 T

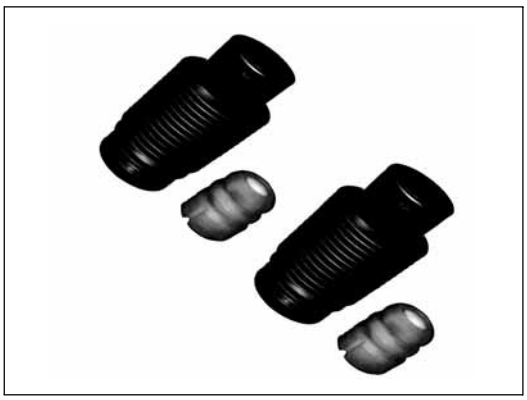

PEUGEOT
206 / 206 CC / 206 SW

VKDP 33308 T

PEUGEOT
406 / 406 Break / 605

VKDP 33311 T

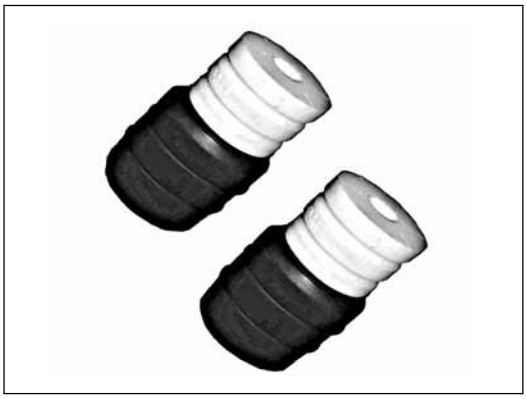

CITROËN
C25 / JUMPER I / JUMPER II

FIAT
DUCATO I Box / DUCATO I Bus / DUCATO I Flatbed / Chassis / DUCATO II / DUCATO III / TALENTO

PEUGEOT
BOXER I / BOXER II / J5

VKDP 33400 T

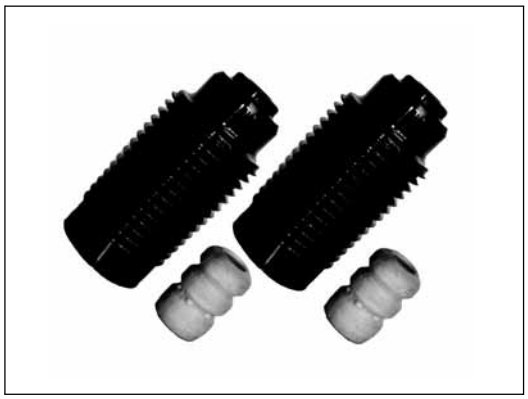

FORD
MONDEO I / MONDEO II

VKDP 33401 T

FORD
ESCORT V, VI / ESCORT VII / FIESTA II / FIESTA IV / ORION III

HYUNDAI
PONY/EXCEL / S COUPE

MAZDA
121

VKDP 33402 T

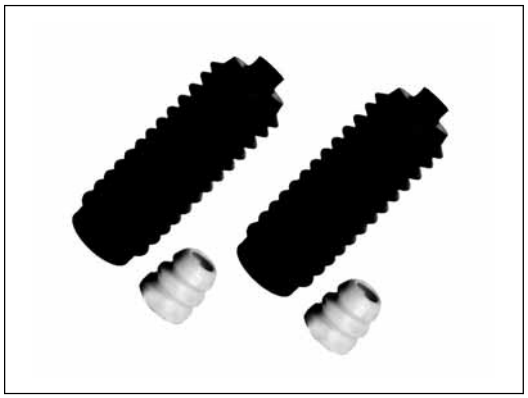

FORD
FOCUS I

VKDP 33403 T

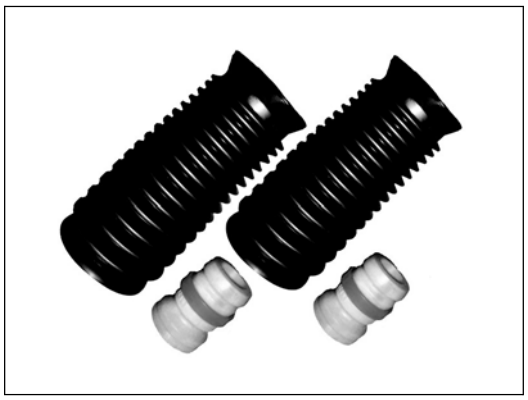

SAAB
9-3 I

VKDP 33404 T

SAAB
9-5

VKDP 33405 T

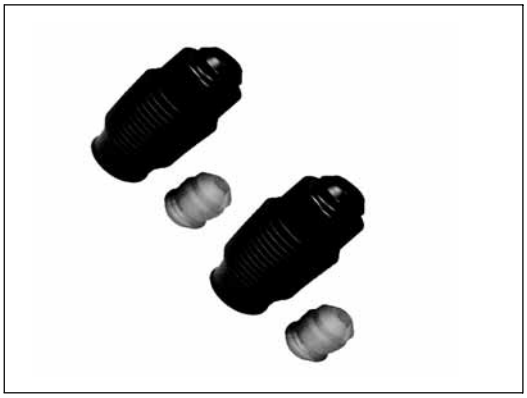

FORD
GALAXY / SCORPIO I

SEAT
ALHAMBRA

VW
SHARAN

VKDP 33406 T

SAAB
900 II

VKDP 33408 T

SAAB
9000

VKDP 33409 T

FORD
SIERRA

VKDP 33410 T

FORD
TRANSIT II

VKDP 33411 T

FORD
MONDEO III

VKDP 33500 T

DAEWOO
ESPERO / LANOS / MATIZ / NEXIA

OPEL
ASCONA C / ASTRA F / CALIBRA / CORSA A / CORSA B / KADETT D / KADETT E / KADETT E (E35) / TIGRA / VECTRA A

VAUXHALL
ASTRA Mk I / ASTRA Mk II / ASTRA Mk III / CALIBRA / CAVALIER Mk II / CAVALIER Mk III / CORSA Mk I / CORSAVAN Mk I / TIGRA

VOLVO
850 / C70 / S70 / V70 I

VKDP 33501 T

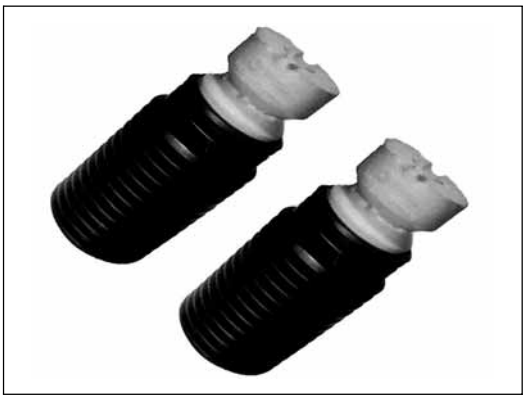

OPEL
ASTRA F / COMMODORE C / REKORD E / SENATOR A

VAUXHALL
ASTRA Mk III / ASTRAVAN

VKDP 33504 T

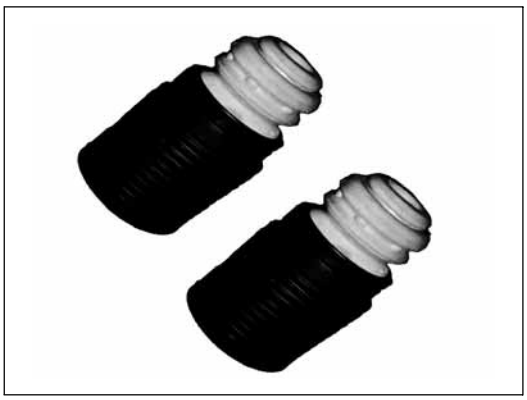

OPEL
OMEGA A / OMEGA B

VAUXHALL
OMEGA

VKDP 33509 T

OPEL
AGILA

VAUXHALL
AGILA

VKDP 33600 T

VOLVO
740 / 760 / 780 Bertone / 940 I / 940 II / 960 I / 960 II

VKDP 33601 T

VOLVO
S40 I / V40

VKDP 33603 T

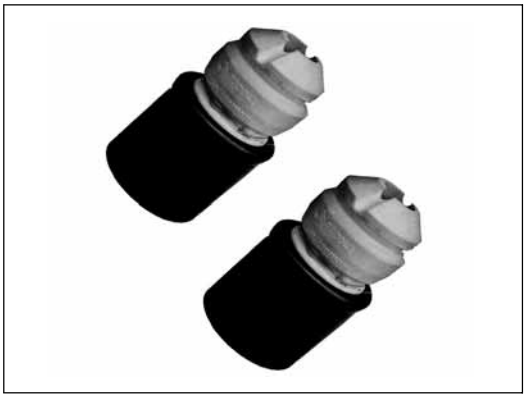

VOLVO
340-360

VKDP 33605 T

VOLVO
440 / 460 / 480

VKDP 33800 T

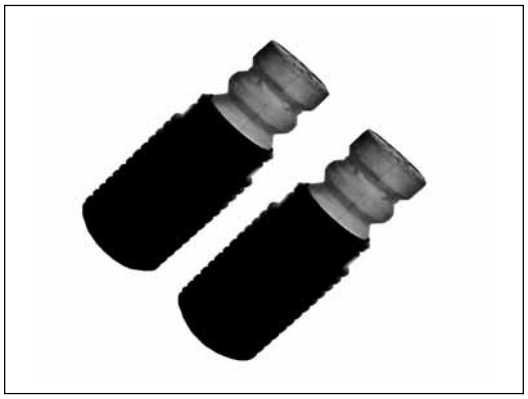

ALFA ROMEO
33 (905) / 33 (905A) Sportwagon / 33 (907A) / 33 (907B)

AUDI
A2 (8Z0)

BMW
3 (E21) / 3 (E30) / 3 (E30) Touring / 3 (E36) / 3 (E36) Touring / 3 (E46) / 3 (E46) Touring / 5 (E12) / 5 (E28) / 5 (E34) / 5 (E34) Touring / 6 (E24) / 7 (E23) / 7 (E32) / M5 (E12) / M5 (E28)

FIAT
PANDA / PANDA (141A_)

SEAT
MARBELLA / TERRA

SKODA
FABIA (6Y2) / FABIA (6Y3) / FABIA (6Y5)

VW
POLO (6N2) / POLO (9N_)

VKDP 33801 T

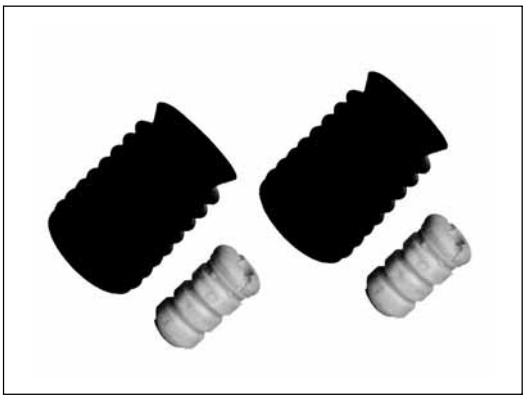

MERCEDES BENZ
124 / 190 / E-class (124)

VKDP 33802 T

MERCEDES BENZ
C-class (203)

VKDP 33803 T

MINI
MINI

VKDP 34303 T

CITROËN
AX / SAXO

VKDP 34500 T

OPEL
ASTRA F CLASSIC / ASTRA G / VECTRA B / ZAFIRA A

VAUXHALL
ASTRA Mk IV / ASTRAVAN / VECTRA Mk I / ZAFIRA

VKDP 41600 T

RENAULT
TWINGO

VKDP 43100 T

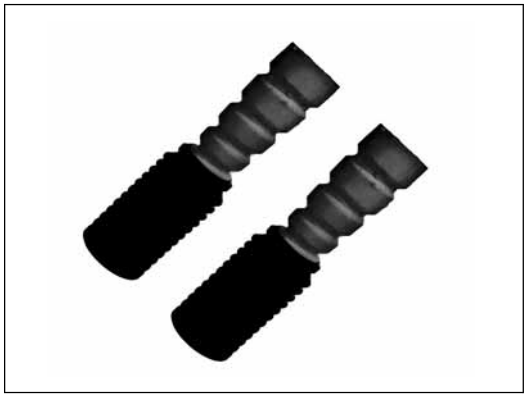

SEAT
TOLEDO I (1L)

SKODA
FAVORIT / FELICIA I / FELICIA II

VW
GOLF II / GOLF III / JETTA II / PASSAT (32B) / SANTANA / VENTO

VKDP 43101 T

AUDI
80 (80,82,B1) / 80 (81, 85, B2) / 80 (89, 89Q, 8A, B3) / 80 (8C, B4) / 90 / COUPE (81, 85)

BMW
3 (E21)

VW
GOLF I / JETTA I / SCIROCCO

VKDP 43102 T

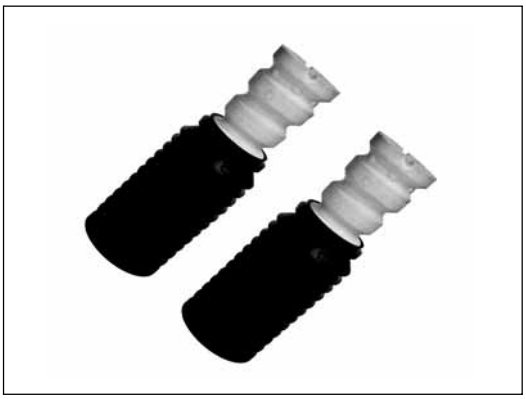

AUDI
50 / A4 (8D2, B5)

VW
CORRADO / DERBY / PASSAT (3A2, 35I) / PASSAT (3A5, 35I) Variant / POLO (86) / POLO (86C, 80)

VKDP 43103 T

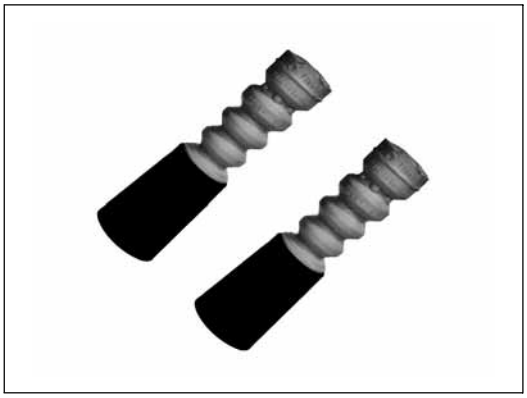

VW
POLO (6N1) / POLO (6N2)

VKDP 43104 T

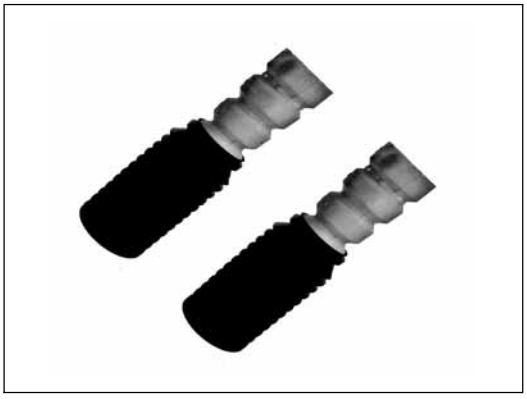

AUDI
A4 (8D2, B5)

VKDP 43105 T

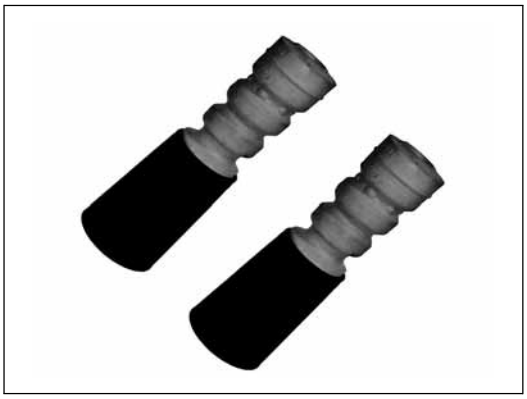

MAZDA
DEMIO

SEAT
CORDOBA I (6K2/C2) / CORDOBA II (6K2) / IBIZA II (6K1) / IBIZA III (6K1)

VW
POLO (6KV2)

VKDP 43106 T

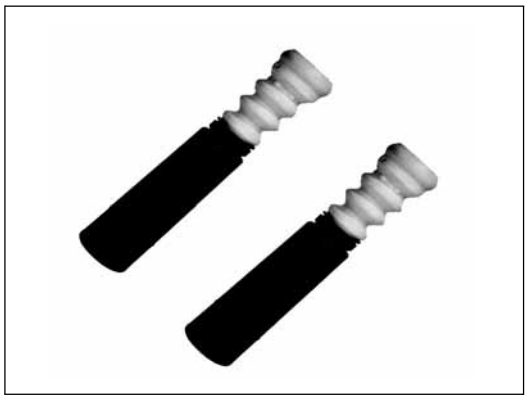

AUDI
A3 (8L1)

SEAT
LEON (1M1) / TOLEDO II (1M2)

SKODA
OCTAVIA (1U2) / OCTAVIA (1U5)

VW
BORA (1J2) / BORA (1J6) / GOLF IV / GOLF IV Variant

VKDP 43400 T

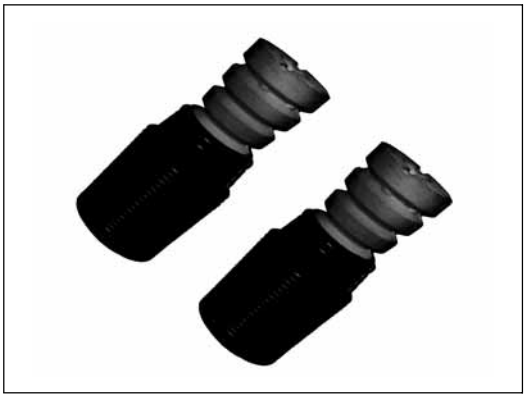

FORD
ESCORT VII / FIESTA IV / PUMA

MAZDA
121 / 929 II

VKDP 43403 T

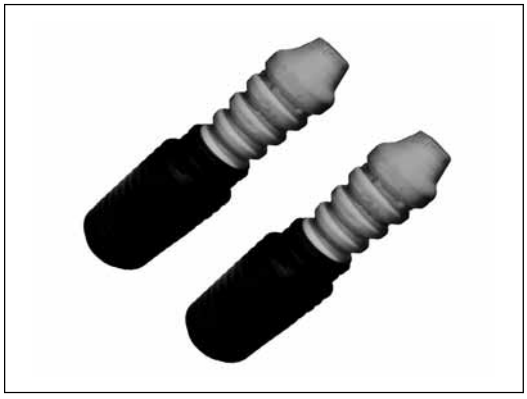

FORD
MONDEO I / MONDEO II

VKDP 43407 T

FORD
MONDEO III

VKDP 43700 T

AUDI
100 II / 100 II Avant / 200 (43)

AUSTIN
MAESTRO I / MONTEGO I

ROVER
MAESTRO / MONTEGO

VKDP 43800 T

MINI
MINI

VKDP 43802 T

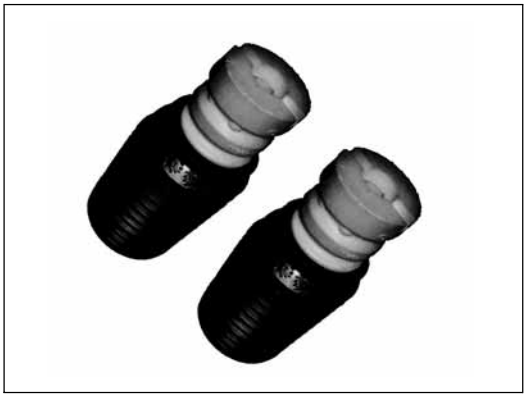

BMW
5 (E12) / 5 (E28)

VKDP 44100 T

VW
GOLF III Variant

VKDP 44400 T

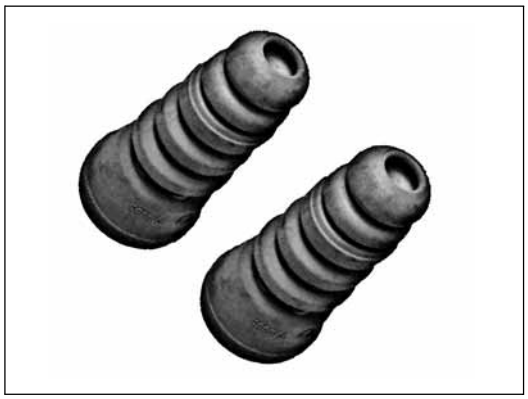

FORD
FOCUS I

VKDP 81400 T

MAZDA
323

VKDP 81505 T

MITSUBISHI
COLT / CORDIA / TREDIA

VKDP 82100 T

TOYOTA
STARLET

VKDP 83106 T

TOYOTA
AVENSIS (_T22_)

VKDP 83201 T

ALFA ROMEO
145 / 146 / 155

NISSAN
CHERRY / SUNNY

TOYOTA
AVENSIS (_T22_)

VKDP 83300 T

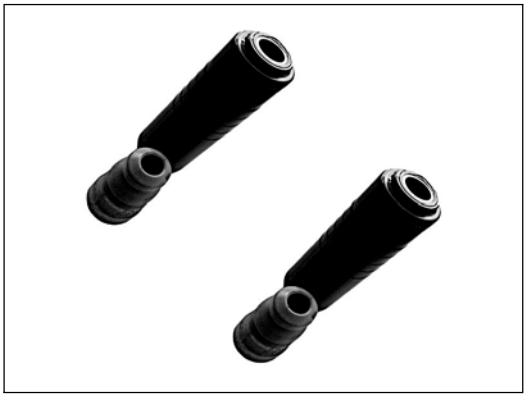

HONDA
CIVIC IV

ROVER
45 (RT)

VKDP 83301 T

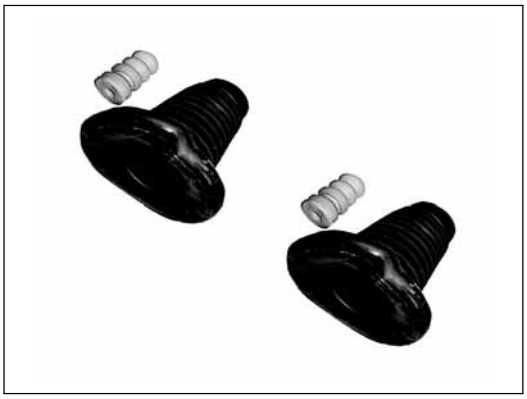

HONDA
CONCERTO

ROVER
200 (XW) / 25 / STREETWISE

VKDP 83502 T

MITSUBISHI
COLT / LANCER

VKDP 83503 T

MITSUBISHI
COLT / LANCER

VKDP 84401 T

MAZDA
626

VKDP 84402 T

MAZDA
626

VKDP 93201 T

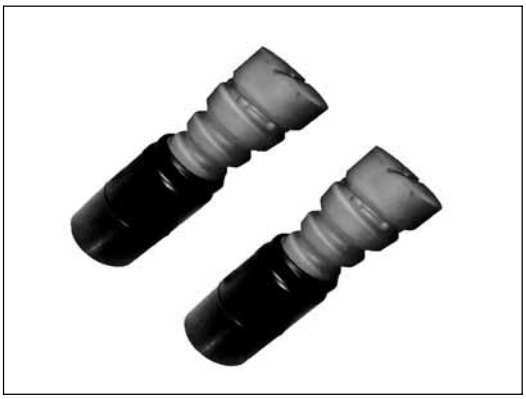

NISSAN
MICRA

VKDP 93203 T

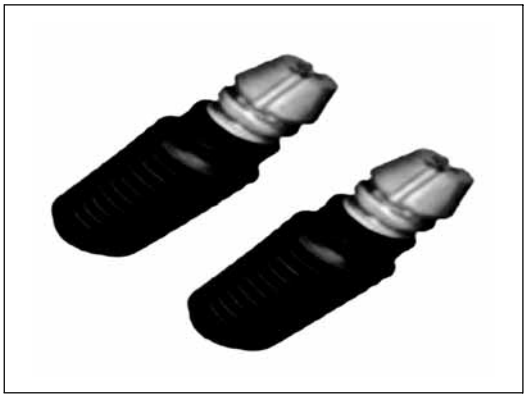

NISSAN
PRIMERA

VKDP 93300 T

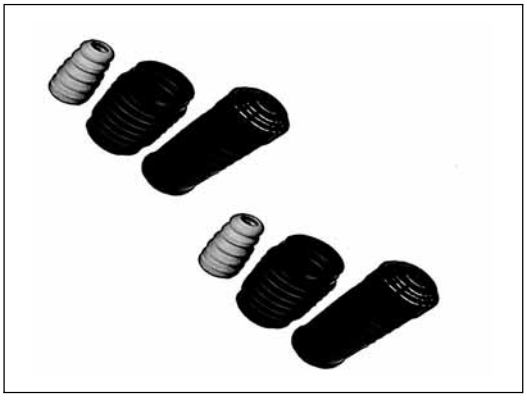

HONDA
CONCERTO

ROVER
200 (XW) / 25 / STREETWISE

VKDP 93401 T

MAZDA
323

VKDP 93402 T

MAZDA
626

VKDS 13500

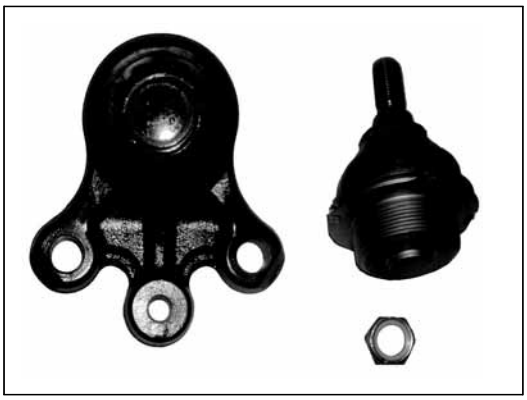

PEUGEOT
407 / 407 SW

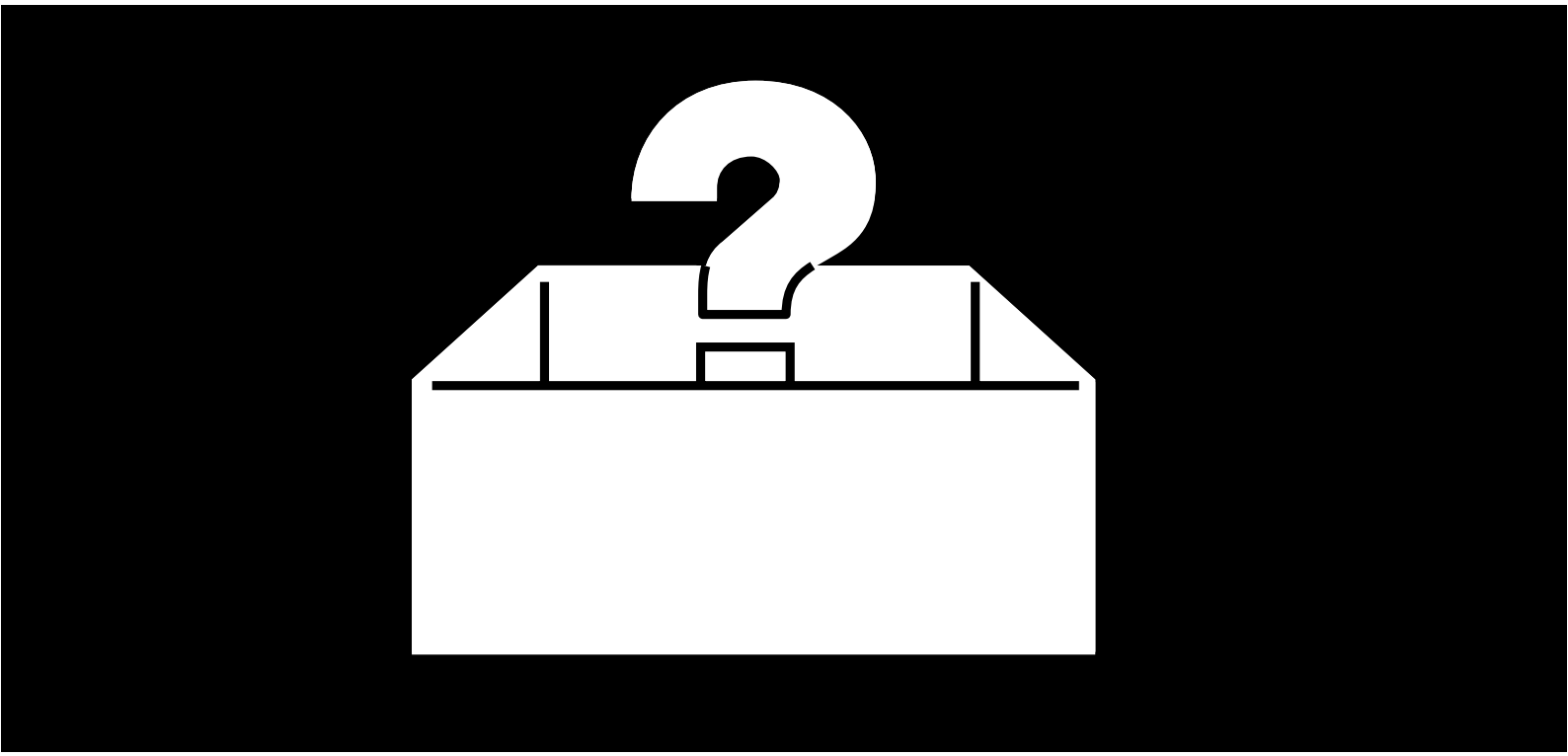

	A	B	C	D	E	F	G
VKD 24000		1					
VKD 35001 T		2					
VKD 35002 T		2					
VKD 35005 T		2					
VKD 35007 T		2					
VKD 35010 T		2					
VKD 35011 T		2					
VKD 35012 T		2					
VKD 35013 T		2					
VKD 35014 T		2					
VKD 35015 T		2					
VKD 35016 T		2					
VKD 35017 T		2				2	
VKD 35018 T		2					
VKD 35020 T		2					
VKD 35021 T		2					
VKD 35023 T		2					
VKD 35025 T		2					
VKD 35030 T		2					
VKD 35032 T		2					
VKD 35034 T		2					
VKD 35035 T		2					
VKD 75001 T		2					
VKD 75003 T		2					
VKDC 35100 T				2			
VKDC 35101 T				2			
VKDC 35102 T				2			
VKDC 35103 T				2			
VKDC 35105 T				2	4		8
VKDA 35110 T		2	2				
VKDA 35111 T		2	2				
VKDA 35112 T		2	2				
VKDA 35113 T		2	2				
VKDA 35115 T		2	2				
VKDA 35116 T			4				
VKDA 35118 T			4				
VKDA 35122 T		2	2				
VKDA 35123 T			2				
VKDA 35200 T		2	2				
VKDA 35201 T		2		2			
VKDC 35202 T				2	6		12
VKDC 35203 T				2			
VKDC 35204 T				2			
VKDC 35207 T				2			

	A	B	C	D	E	F	G
VKDC 35213 T				2			
VKDC 35214 T				2			
VKDA 35220 T		2	2				
VKDA 35221 T		2	2				
VKDA 35222 T		2	2				
VKDA 35223 T		2	2				
VKDA 35225 T		2	2				
VKDA 35230 T			2				
VKDA 35233 T		2	4				
VKDC 35232 T				2			
VKDA 35236 T		2	2				
VKDA 35300 T		2	2		4		
VKDA 35302 T		2	2		6		
VKDA 35303 T		2	2				
VKDA 35304 T		2	2				
VKDA 35305 T		2	2				
VKDA 35306 T		2	2				
VKDA 35307 T		2	2				
VKDA 35308 T		2	2				
VKDA 35309 T		2	2				
VKDA 35312 T		2	2				
VKDA 35313 T		2	2			2	
VKDA 35315 T		2	2				
VKDA 35316 T		2	2				
VKDA 35317 T		2	2				
VKDA 35319 T		2	2				
VKDA 35321 T		2	2			2	
VKDA 35400 T		2	2		6		6
VKDA 35401 T		2	2		4		
VKDA 35402 T		2	2				
VKDA 35403 T		2	2				
VKDA 35405 T		2	2				
VKDA 35406 T		2	2				
VKDA 35407 T		2	2				
VKDA 35409 T		2	2				
VKDA 35415 T			2				
VKDA 35416 T		2	2				
VKDA 35417 T		2	2				
VKDA 35418 T		2	2				
VKDC 35420 T				2			
VKDA 35423 T		2	2				
VKDA 35424 T		2	2				
VKDA 35425 T		2	2				
VKDA 35500 T		2	2		4		4

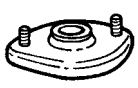						
A	B	C	D	E	F	G

	A	B	C	D	E	F	G
VKDA 35501 T		2	2				
VKDA 35503 T		2	2		4		4
VKDC 35504 T				2	4		4
VKDC 35505 T				2	4		4
VKDA 35508 T			2				
VKDA 35509 T			2				
VKDA 35510 T		2	2				
VKDA 35511 T		2	2				
VKDA 35513 T		2	2				
VKDA 35515 T		2	2				
VKDA 35520 T		2	2				
VKDA 35521 T		2	2				
VKDA 35600 T		2	2				
VKDA 35601 T		2	2				
VKDA 35602 T		2	2				
VKDA 35603 T		2	2				
VKDA 35604 T		2	2				
VKDA 35605 T		2	2				
VKDA 35607 T		2	2				
VKDA 35608 T		2	2				
VKDC 35611 T				2			
VKDC 35613 T				2			
VKDA 35615 T		2	2				
VKDA 35616 T		2	2				
VKDA 35619 T		2	2				
VKDA 35620 T		2	2				
VKDA 35622 T		2	2				
VKDA 35623 T		2	2				
VKDA 35625 T		2	2				
VKDA 35626 T		2	4				2
VKDC 35627 T			2	2			
VKDA 35630 T		2	2				
VKDA 35631 T		2	2				
VKDA 35633 T		2	2				
VKDC 35634 T			2	2			
VKDA 35702 T		2	2				
VKDC 35703 T	2						
VKDA 35705 T			2				
VKDC 35709 T	2						
VKDC 35801 T				2			
VKDC 35802 T				2			
VKDA 35810 T			2				
VKDA 35811 T			2				
VKDA 35813 T		2	2				

	A	B	C	D	E	F	G
VKDC 35814 T				2			
VKDC 35815 T				2			
VKDC 35820 T				2			
VKDC 35821 T				2			
VKDA 37200 T		2	2		6		12
VKDA 37201 T		2	2		4		8
VKDA 37202 T		2	2				
VKDA 37203 T		2	2				
VKDA 37204 T		2	2		6		12
VKDA 40101 T			4				
VKDA 40102 T			2				
VKDA 40104 T			2				
VKDA 40109 T			2				
VKDA 40110 T			2				
VKDA 40111 T			4				
VKDA 40113 T			4				
VKDA 40121 T			4				
VKDA 40122 T			2				
VKDA 40123 T			2				
VKDA 40124 T			2				
VKDA 40125 T			2				
VKDA 40126 T			2				
VKDA 40128 T			2				
VKDA 40129 T			2				
VKDA 40204 T			2				
VKDA 40208 T			2				
VKDA 40218 T			2				
VKDA 40219 T			2				
VKDA 40300 T			4				
VKDA 40302 T			4				
VKDA 40304 T			2				
VKDA 40400 T			2				
VKDA 40401 T			2				
VKDA 40404 T			2				
VKDA 40407 T			2				
VKDA 40415 T			2				
VKDA 40416 T			2				
VKDA 40600 T			2				
VKDA 40610 T			2				
VKDA 40611 T			2				
VKDA 40614 T			2				
VKDA 40616 T			2				
VKDA 40700 T			2				
VKDA 40802 T			2				

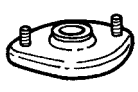			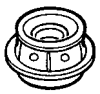			
A	B	C	D	E	F	G

	A	B	C	D	E	F	G
VKDA 40805 T			2				
VKDA 40809 T			2				
VKDA 40813 T			2				
VKDA 40815 T			2				
VKDC 81102 T				2		2	
VKDC 81103 T				2		2	
VKDC 81104 T				2		2	
VKDC 81105 T				2		2	
VKDC 81112 T				2			
VKDC 81201 T				2	6		
VKDA 81501 T		2	2				
VKDA 81502 T		2	2				
VKDC 81503 T				2	4		
VKDC 81504 T				2	4		
VKDC 81505 T				2			
VKDA 88202 T		2	2		6	2	
VKDA 88203 T	2	2			6		
VKDA 88204 T	2	2			6		
VKDA 88205 T		2	2			2	
VKDA 88401 T	2	2				2	
VKDA 88402 T	2	2				2	
VKDA 88404 T	2	2			8		

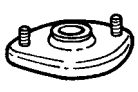 A	B	C	D	E	F	G

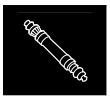	A	B	C	D	E	F	G	H
VKDA 13003	2	1	2	2	2	2	4	
VKDA 13004	2					2		
VKDA 23001	2	1	1		1	4	1	1
VKDA 23002	2	1	1		1	2		
VKDA 23005	2	1	1		1	4	1	
VKDA 27000	2					2		
VKDA 27001	2					1	1	
VKDA 27003	2		1			2		
VKDA 27004	2		1			2		
VKDA 27006	2							
VKDA 27007	2					1		
VKDA 27009	2							
VKDA 27010	2							
VKDA 27013	2							
VKDA 27014	2	2	3		1	2	2	

A	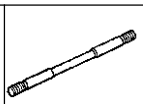 B	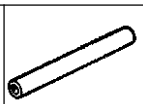 C	D	E	F	G	H

	A	B	C
VKDP 31200 T			2
VKDP 31400 T			2
VKDP 31600 T			2
VKDP 31601 T			2
VKDP 31602 T			2
VKDP 31603 T			2
VKDP 31606 T			2
VKDP 31609 T			2
VKDP 32103 T	2	2	
VKDP 32301 T	2	2	
VKDP 32302 T	2	2	
VKDP 32600 T	2	2	
VKDP 32601 T	2	2	
VKDP 32602 T	2	2	
VKDP 33100 T	2	2	
VKDP 33101 T	2	2	
VKDP 33102 T	2	2	
VKDP 33104 T	2	2	
VKDP 33107 T	2	2	
VKDP 33108 T	2	2	
VKDP 33110 T	2	2	
VKDP 33111 T	2	2	
VKDP 33202 T	2	2	
VKDP 33203 T	2	2	
VKDP 33207 T			2
VKDP 33208 T			2
VKDP 33300 T	2	2	
VKDP 33301 T	2	2	
VKDP 33303 T	2	2	
VKDP 33304 T	2	2	
VKDP 33306 T	2	2	
VKDP 33308 T	2	2	
VKDP 33311 T			2
VKDP 33400 T	2	2	
VKDP 33401 T	2	2	
VKDP 33402 T	2	2	
VKDP 33403 T	2	2	
VKDP 33404 T	2	2	
VKDP 33405 T	2	2	
VKDP 33406 T			2
VKDP 33408 T	2	2	
VKDP 33409 T	2	2	
VKDP____	2	2	
VKDP 33411 T	2	2	

	A	B	C
VKDP 33500 T	2	2	
VKDP 33501 T	2	2	
VKDP 33504 T	2	2	
VKDP 33509 T	2		
VKDP 33600 T	2	2	
VKDP 33601 T	2	2	
VKDP 33603 T	2	2	
VKDP 33605 T	2	2	
VKDP 33800 T	2	2	
VKDP 33801 T	2	2	
VKDP 33803 T	2	2	
VKDP 33802 T			2
VKDP 34303 T		2	
VKDP 34500 T	2		
VKDP 41600 T			2
VKDP 43100 T	2	2	
VKDP 43101 T	2	2	
VKDP 43102 T	2	2	
VKDP 43103 T	2	2	
VKDP 43104 T	2	2	
VKDP 43105 T	2	2	
VKDP 43106 T	2	2	
VKDP 43400 T	2	2	
VKDP 43403 T	2	2	
VKDP 43407 T	2	2	
VKDP 43700 T	2	2	
VKDP 43800 T	2	2	
VKDP 43802 T	2	2	
VKDP 44100 T	2		
VKDP 44400 T	2		
VKDP 81400 T			2
VKDP 81505 T			2
VKDP 82100 T	2	2	
VKDP 83106 T	2	2	
VKDP 83201 T	2	2	
VKDP 83300 T	2	2	
VKDP 83301 T	2	2	
VKDP 83502 T	2	2	
VKDP 83503 T	2	2	
VKDP 84401 T		2	
VKDP 84402 T		2	
VKDP 93201 T	2	2	
VKDP 93203 T	2	2	
VKDP 93300 T	2	2	

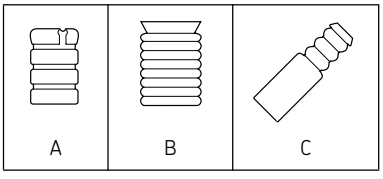

	A	B	C
VKDP 93401 T	2	2	
VKDP 93402 T	2	2	

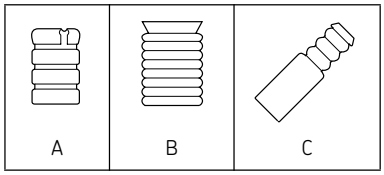

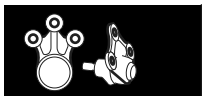	A	B	C
VKDS 13500	1	1	1

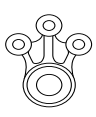 A	B	C

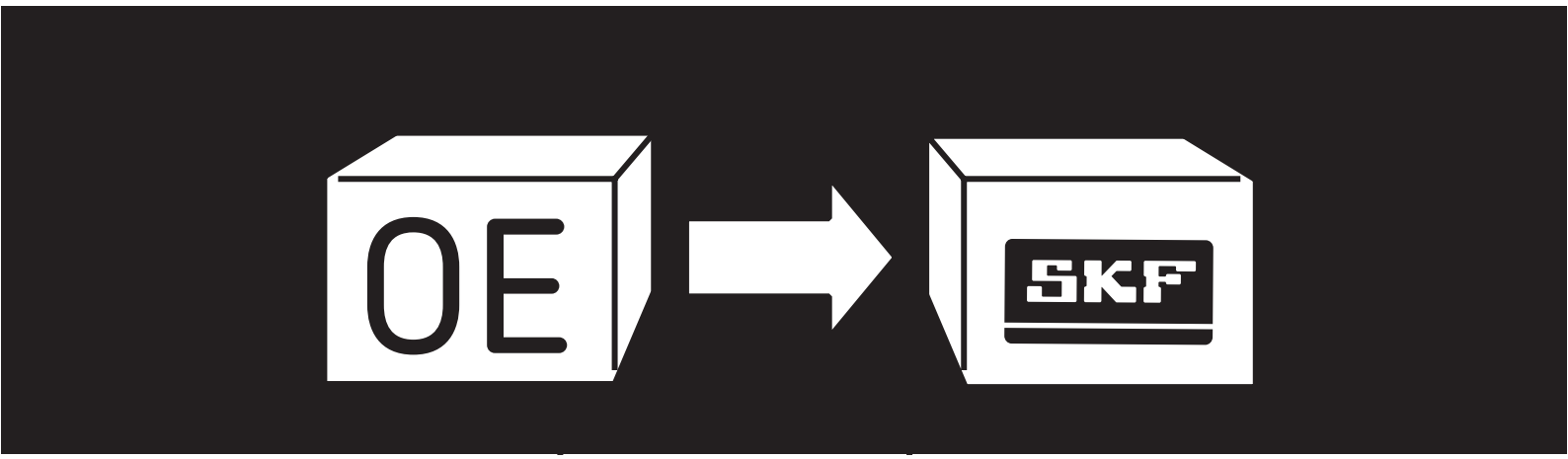

ALFA ROMEO 210
AUDI 210
BMW 210
CITROËN 210
DAEWOO 210
FIAT 210
FORD 210
HONDA 210
HYUNDAI 210
LANCIA 210
MAZDA 210
MG 210
MITSUBISHI 210
NISSAN 210
OPEL 210
PEUGEOT 211
RENAULT 211
ROVER 211
SAAB 211
SEAT 211
SKODA 211
TOYOTA 211
VAUXHALL 211
VOLVO 211
VW 211

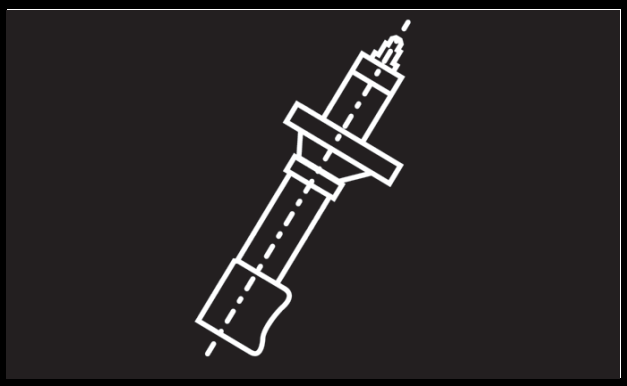

BILSTEIN 212
BOGE 222
GABRIEL 232
KAYABA 240
MONROE 250
SACHS 262

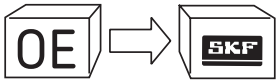
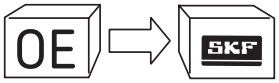
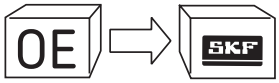

ALFA ROMEO

60501446	(x2)	**VKD 35015 T**

AUDI

431 412 249 D	(x2)	**VKD 35023 T**
441 412 249 A	(x2)	**VKD 35023 T**
4A0 412 249	(x2)	**VKD 35021 T**
6N0 412 249 B	(x2)	**VKD 35025 T**
6N0 412 249 C	(x2)	**VKD 35025 T**
6N0 412 249 D	(x2)	**VKD 35025 T**
811 412 323 C	(x2)	**VKDC 35100 T**
812 412 323 D	(x2)	**VKDC 35100 T**
857 412 323 B		VKDC 35104
871 412 323 B	(x2)	**VKDC 35103 T**
8A0 412 323 D	(x2)	**VKDC 35100 T**
8A0 412 323 B	(x2)	**VKDC 35100 T**
8E0 512 099 A	(x2)	**VKDA 40122 T**

BMW

31 30 6 764 884	(x2)	**VKDC 35821 T**
31 33 1 090 467 A	(x2)	**VKDC 35802 T**
31 33 1 091 709	(x2)	**VKDC 35815 T**
31 33 1 092 885	(x2)	**VKDC 35802 T**
31 33 1 110 195	(x2)	**VKDC 35820 T**
31 33 1 112 644	(x2)	**VKDC 35820 T**
31 33 1 124 508 A	(x2)	**VKDC 35801 T**
31 33 1 134 314	(x2)	**VKDC 35820 T**
31 33 1 135 582 AE	(x2)	**VKDC 35802 T**
31 33 1 139 452	(x2)	**VKDC 35801 T**
31 33 6 752 735	(x2)	**VKDC 35814 T**
31 33 6 759 498	(x2)	**VKDC 35821 T**
31 33 6 760 943	(x2)	**VKDC 35814 T**
31 33 6 764 947	(x2)	**VKDC 35802 T**
31 33 6 769 582	(x2)	**VKDC 35814 T**
31 33 6 769 585	(x2)	**VKDC 35802 T**

CITROËN

5031.25	(x2)	**VKDA 35303 T**
5031.53	(x2)	**VKDA 35302 T**
5031.54	(x2)	**VKDA 35300 T**
5031.55	(x2)	**VKDA 35303 T**
5031.63	(x2)	**VKDA 35305 T**
5031.64	(x2)	**VKDA 35304 T**
5031.65	(x2)	**VKDA 35312 T**
5031.66 + 5031.67		**VKDA 35317 T**
5031.70 + 5031.71		**VKDA 35313 T**
5031.72	(x2)	**VKDA 35307 T**
5031.73	(x2)	**VKDA 35306 T**
5031.77	(x2)	**VKDA 35315 T**
5031.78 + 5031.79		**VKDA 35321 T**
5031.81	(x2)	**VKDA 35306 T**
5031.82	(x2)	**VKDA 35306 T**
5035.17	(x2)	**VKD 35016 T**
5035.23	(x2)	**VKD 35002 T**
5035.27	(x2)	**VKD 35002 T**
5035.29	(x2)	**VKD 35018 T**
5035.30	(x2)	**VKD 35017 T**
5035.38	(x2)	**VKD 35018 T**
5035.39	(x2)	**VKD 35017 T**
5035.43	(x2)	**VKD 35018 T**
5035.47	(x2)	**VKD 35017 T**
5132.62		**VKDA 27001**
91510633	(x2)	**VKD 35002 T**
95 619 159		**VKDA 23001**
95 619 169		**VKDA 23002**
95 619 173		**VKDA 13003**
95 619 174		**VKDA 13004**

DAEWOO

09266-80001	(x2)	**VKD 75001 T**
09266-80002	(x2)	**VKD 75001 T**
09266-80003	(x2)	**VKD 75001 T**

FIAT

1302443080	(x2)	**VKD 35017 T**
1303672080	(x2)	**VKD 35018 T**
1318573080	(x2)	**VKD 35017 T**
1318825080	(x2)	**VKD 35018 T**
1329669080	(x2)	**VKD 35018 T**
4390179	(x2)	**VKD 35016 T**
46445246	(x2)	**VKDC 35204 T**
46457409 + 46457410		**VKDC 35232 T**
46469709	(x2)	**VKDC 35204 T**
46746544	(x2)	**VKD 35030 T**
46746546	(x2)	**VKD 35030 T**
46746548	(x2)	**VKD 35030 T**
46760673 + 46760674		**VKDC 35232 T**
7667087	(x2)	**VKDC 35202 T**
7775940	(x2)	**VKDC 35203 T**
7776485	(x2)	**VKDC 35204 T**
82398815	(x2)	**VKDC 35213 T**
82398818	(x2)	**VKDC 35214 T**
82406929	(x2)	**VKDC 35214 T**
82491440 + 82491441		**VKDC 35232 T**
9405031669 + 9405031679		**VKDA 35317 T**
9405031689 + 9405031699		**VKDA 35317 T**
9405031789 + 9405031799		**VKDA 35321 T**
9405035439	(x2)	**VKD 35018 T**

FORD

1002513	(x2)	**VKD 35034 T**
1023332	(x2)	**VKD 35013 T**
1051724	(x2)	**VKD 35013 T**
1055193	(x2)	**VKD 35034 T**
1078730	(x2)	**VKD 35013 T**
1103725	(x2)	**VKD 35013 T**
1223835	(x2)	**VKD 35035 T**
1250820	(x2)	**VKD 35035 T**
1255350	(x2)	**VKD 35035 T**
3M51 3K099 AC	(x2)	**VKD 35035 T**
4094373	(x2)	**VKD 35013 T**
6112404	(x2)	**VKD 35010 T**
6130060	(x2)	**VKD 35010 T**
6130307	(x2)	**VKD 35010 T**
6150276	(x2)	**VKD 35014 T**
6735956	(x2)	**VKD 35013 T**
83BB 3K099 AB	(x2)	**VKD 35010 T**
85BB 3K099 AA	(x2)	**VKD 35014 T**
96FB 3K099 AB	(x2)	**VKD 35034 T**
98BG 3K099 AC	(x2)	**VKD 35013 T**
YC15 3K099 AA	(x2)	**VKD 35013 T**

HONDA

51726-SAA-003	(x2)	**VKD 35030 T**

HYUNDAI

54610-28000	(x2)	**VKDC 81503 T**
54610-M2000	(x2)	**VKDC 81505 T**
54612-2C000	(x2)	**VKD 35002 T**
54612-4D000	(x2)	***VKD 75003 T***

LANCIA

1303672080	(x2)	**VKD 35018 T**
1318825080	(x2)	**VKD 35018 T**
1329669080	(x2)	**VKD 35018 T**
46452740		VKDC 35205
46452741		VKDC 35206
7778950	(x2)	**VKD 35020 T**
82398815	(x2)	**VKDC 35213 T**
82398818	(x2)	**VKDC 35214 T**
82403819	(x2)	**VKDC 35207 T**
82406929	(x2)	**VKDC 35214 T**
82424665		VKDC 35209
82429601	(x2)	**VKDC 35207 T**
9405031669 + 9405031679		**VKDA 35317 T**
9405031689 + 9405031699		**VKDA 35317 T**
9405035439	(x2)	**VKD 35018 T**

MAZDA

BP4K-34-38XA	(x2)	**VKD 35035 T**

MG

RNX 100020	(x2)	***VKDC 35703 T***
RNX 100080	(x2)	***VKDC 35709 T***

MITSUBISHI

MB 518798	(x2)	**VKDC 81503 T**
MB 573617	(x2)	**VKDC 81505 T**
MB 808306	(x2)	**VKDC 81504 T**

NISSAN

54320-05E00	(x2)	**VKDC 81201 T**
54320-05E01	(x2)	**VKDC 81201 T**

OPEL

312503	(x2)	**VKD 35010 T**
344505	(x2)	**VKD 35005 T**
344508	(x2)	**VKDC 35504 T**

OE		SKF
344509	(x2)	**VKDC 35505 T**
4410926	(x2)	**VKDA 35622 T**
90121275	(x2)	**VKD 35005 T**
93160623	(x2)	**VKDA 35622 T**

PEUGEOT

5031.25	(x2)	**VKDA 35303 T**
5031.48	(x2)	**VKDA 35319 T**
5031.53	(x2)	**VKDA 35302 T**
5031.54	(x2)	**VKDA 35300 T**
5031.55	(x2)	**VKDA 35303 T**
5031.56 + 5031.58		**VKDA 35308 T**
5031.57 + 5031.59		**VKDA 35309 T**
5031.63	(x2)	**VKDA 35305 T**
5031.64	(x2)	**VKDA 35304 T**
5031.65	(x2)	**VKDA 35312 T**
5031.66 + 5031.67		**VKDA 35317 T**
5031.70 + 5031.71		**VKDA 35313 T**
5031.72	(x2)	**VKDA 35307 T**
5031.73	(x2)	**VKDA 35306 T**
5031.77	(x2)	**VKDA 35315 T**
5031.78 + 5031.79		**VKDA 35321 T**
5031.A1 + 5031.A2		**VKDA 35308 T**
5035.17	(x2)	**VKD 35016 T**
5035.20	(x2)	**VKD 35001 T**
5035.23	(x2)	**VKD 35002 T**
5035.27	(x2)	**VKD 35002 T**
5035.29	(x2)	**VKD 35018 T**
5035.30	(x2)	**VKD 35017 T**
5035.32	(x2)	**VKD 35007 T**
5035.38	(x2)	**VKD 35018 T**
5035.39	(x2)	**VKD 35017 T**
5035.43	(x2)	**VKD 35018 T**
5035.47	(x2)	**VKD 35017 T**
5132.62		**VKDA 27001**

RENAULT

77 00 777 654	(x2)	**VKD 35001 T**
77 00 797 666	(x2)	**VKD 35001 T**
77 00 803 635	(x2)	**VKD 35001 T**
77 01 207 350	(x2)	**VKDA 35626 T**
77 01 207 491	(x2)	**VKDA 35622 T**
77 01 207 537	(x2)	**VKDA 35619 T**
77 01 207 678	(x2)	**VKDA 35625 T**
77 01 207 797	(x2)	**VKDA 35615 T**
77 01 207 815	(x2)	**VKDA 35616 T**
77 01 208 419	(x2)	**VKDA 35626 T**
77 01 208 582 + 77 01 208 591		***VKDA 35631 T***
77 01 208 822 + 77 01 208 823		***VKDA 35631 T***
77 01 208 891	(x2)	**VKDA 35625 T**
77 01 470 087	(x2)	**VKDA 35602 T**
77 01 470 088	(x2)	**VKDA 35600 T**
77 01 470 089	(x2)	**VKDA 35601 T**
77 01 472 254	(x2)	**VKDA 35607 T**

OE		SKF

ROVER

ADU 4620	(x2)	**VKD 35012 T**
EGP 1557	(x2)	VKD 35011 T
RNX 100020	(x2)	***VKDC 35703 T***
RNX 100080	(x2)	***VKDC 35709 T***

SAAB

4106969	(x2)	**VKDC 35420 T**
4246377	(x2)	**VKD 35032 T**
4909701	(x2)	**VKD 35032 T**
8963282	(x2)	**VKDC 35420 T**

SEAT

191 412 329	(x2)	**VKDC 35102 T**
6N0 412 249 B	(x2)	**VKD 35025 T**
6N0 412 249 C	(x2)	**VKD 35025 T**
6N0 412 249 D	(x2)	**VKD 35025 T**
SE 021156017 A	(x2)	**VKD 35012 T**

SKODA

6N0 412 249 B	(x2)	**VKD 35025 T**
6N0 412 249 C	(x2)	**VKD 35025 T**
6N0 412 249 D	(x2)	**VKD 35025 T**

TOYOTA

48609-05010	(x2)	**VKDC 81112 T**
48609-12190	(x2)	**VKDC 81104 T**
48609-12191	(x2)	**VKDC 81104 T**
48609-12192	(x2)	**VKDC 81104 T**
48609-12270	(x2)	**VKDC 81103 T**
48609-12330	(x2)	**VKDC 81103 T**
48609-20050	(x2)	**VKDC 81105 T**
48609-20060	(x2)	**VKDC 81105 T**
48609-20160	(x2)	**VKDC 81102 T**
48609-20220	(x2)	**VKDC 81102 T**
48619-0D010	(x2)	**VKD 35030 T**

VAUXHALL

4410926	(x2)	**VKDA 35622 T**
93160623	(x2)	**VKDA 35622 T**

VOLVO

1272455-5	(x2)	**VKDC 35611 T**
30616825-3	(x2)	**VKD 35013 T**
30666530	(x2)	**VKD 35035 T**
30818465	(x2)	**VKDC 35613 T**
3266405-4	(x2)	**VKD 35012 T**
3411070-0	(x2)	**VKD 35001 T**
3530341-1	(x2)	**VKD 35032 T**
8634457	(x2)	**VKDC 35627 T**
8646713	(x2)	**VKDC 35627 T**
9461728	(x2)	**VKDC 35627 T**

OE		SKF

VW

171 412 329 A	(x2)	**VKDC 35105 T**
191 412 329	(x2)	**VKDC 35102 T**
357 412 329	(x2)	**VKDC 35101 T**
6N0 412 249 B	(x2)	**VKD 35025 T**
6N0 412 249 C	(x2)	**VKD 35025 T**
6N0 412 249 D	(x2)	**VKD 35025 T**
811 412 323 C	(x2)	**VKDC 35100 T**
812 412 323 D	(x2)	**VKDC 35100 T**
871 412 323 B	(x2)	**VKDC 35103 T**
8A0 412 323 D	(x2)	**VKDC 35100 T**
8A0 412 323 B	(x2)	**VKDC 35100 T**

BILSTEIN

001853	**VKDC 35814 T**			BMW
001860	**VKDC 35814 T**	**VKDP 33800 T**		BMW
001932	**VKDC 35814 T**		⚠	BMW
001932	**VKDC 35815 T**		⚠	BMW
001969	**VKDC 35802 T**			BMW
002223	**VKD 35016 T**	**VKDP 33311 T**		FIAT
002713	**VKDC 35814 T**	**VKDP 33800 T**		BMW
002719	**VKDC 35814 T**	**VKDP 33800 T**		BMW
002741	**VKDC 35814 T**		⚠	BMW
002741	**VKDC 35815 T**		⚠	BMW
004878	***VKDA 35123 T***	**VKDP 33111 T**		AUDI
004880	***VKDA 35123 T***	**VKDP 33111 T**		AUDI
004934	**VKD 35016 T**	**VKDP 33311 T**		FIAT
005335	**VKDC 35814 T**			BMW
005336	**VKDC 35814 T**			BMW
005378	**VKDC 35814 T**	**VKDP 33800 T**		BMW
006026	**VKDA 35602 T**	VKDP 31606 T		RENAULT
006279	**VKDC 35102 T**	**VKDP 33100 T**	⚠	SEAT
006279	**VKDC 35102 T**	**VKDP 33108 T**	⚠	SEAT
006279	**VKDA 35110 T**	**VKDP 33100 T**	⚠	SEAT
006279	**VKDA 35110 T**	**VKDP 33108 T**	⚠	SEAT
006280	**VKDC 35102 T**	**VKDP 33100 T**	⚠	SEAT
006280	**VKDC 35102 T**	**VKDP 33108 T**	⚠	SEAT
006280	**VKDA 35110 T**	**VKDP 33100 T**	⚠	SEAT
006280	**VKDA 35110 T**	**VKDP 33108 T**	⚠	SEAT
006565	**VKDA 35110 T**		⚠	SEAT
006565	**VKDA 35115 T**		⚠	SEAT
006566	**VKDA 35110 T**		⚠	SEAT
006566	**VKDA 35115 T**		⚠	SEAT
006578	**VKDA 35110 T**	**VKDP 33108 T**	⚠	SEAT
006578	**VKDA 35110 T**	**VKDP 33100 T**	⚠	SEAT
006578	**VKDC 35102 T**	**VKDP 33108 T**	⚠	SEAT
006578	**VKDC 35102 T**	**VKDP 33100 T**	⚠	SEAT
006579	**VKDC 35102 T**	**VKDP 33100 T**	⚠	SEAT
006579	**VKDC 35102 T**	**VKDP 33108 T**	⚠	SEAT
006579	**VKDA 35110 T**	**VKDP 33100 T**	⚠	SEAT
006579	**VKDA 35110 T**	**VKDP 33108 T**	⚠	SEAT
006580	**VKDA 35110 T**		⚠	SEAT
006580	**VKDA 35115 T**		⚠	SEAT
006581	**VKDA 35110 T**		⚠	SEAT
006581	**VKDA 35115 T**		⚠	SEAT
006582	**VKDA 35110 T**		⚠	SEAT
006582	**VKDC 35102 T**		⚠	SEAT
006583	**VKDA 35110 T**		⚠	SEAT
006583	**VKDC 35102 T**		⚠	SEAT
006584	**VKDA 35110 T**		⚠	SEAT
006584	**VKDC 35102 T**		⚠	SEAT
006585	**VKDA 35110 T**		⚠	SEAT
006585	**VKDC 35102 T**		⚠	SEAT
006604	**VKDC 35814 T**	**VKDP 33800 T**		BMW
006605	**VKDC 35814 T**	**VKDP 33800 T**		BMW
006607	**VKDC 35814 T**	**VKDP 33800 T**		BMW
006608	**VKDC 35814 T**	**VKDP 33800 T**		BMW
006610	**VKDC 35814 T**			BMW
006611	**VKDC 35814 T**			BMW
006613	**VKDC 35814 T**	**VKDP 33800 T**		BMW
006614	**VKDC 35814 T**	**VKDP 33800 T**		BMW
006616	**VKDC 35814 T**			BMW
006617	**VKDC 35814 T**			BMW
006742	**VKDC 35102 T**	**VKDP 33100 T**	⚠	SEAT
006742	**VKDC 35102 T**	**VKDP 33108 T**	⚠	SEAT
006742	**VKDA 35110 T**	**VKDP 33100 T**	⚠	SEAT
006742	**VKDA 35110 T**	**VKDP 33108 T**	⚠	SEAT
006743	**VKDA 35110 T**	**VKDP 33100 T**	⚠	SEAT
006743	**VKDA 35110 T**	**VKDP 33108 T**	⚠	SEAT
006743	**VKDC 35102 T**	**VKDP 33100 T**	⚠	SEAT
006743	**VKDC 35102 T**	**VKDP 33108 T**	⚠	SEAT
006759	**VKDC 35814 T**		⚠	BMW
006759	**VKDC 35815 T**		⚠	BMW
006760	**VKDC 35814 T**		⚠	BMW
006760	**VKDC 35815 T**		⚠	BMW
101133	**VKDA 35122 T**		⚠	SEAT
101133	***VKDA 40124 T***		⚠	SEAT
101135	**VKDA 35122 T**		⚠	SEAT
101135	***VKDA 40124 T***		⚠	SEAT
101136	**VKDA 35122 T**		⚠	SEAT
101136	***VKDA 40124 T***		⚠	SEAT
101137	**VKDA 35122 T**		⚠	SEAT
101137	***VKDA 40124 T***		⚠	SEAT
101143	**VKDA 35122 T**		⚠	SEAT
101143	***VKDA 40124 T***		⚠	SEAT
101159	**VKDA 35122 T**		⚠	SEAT
101159	***VKDA 40124 T***		⚠	SEAT
101162	**VKDA 35122 T**		⚠	SEAT
101162	***VKDA 40124 T***		⚠	SEAT
101182	**VKDA 35122 T**		⚠	SEAT
101182	***VKDA 40124 T***		⚠	SEAT
101503	**VKDC 35102 T**	**VKDP 33100 T**	⚠	VW
101503	**VKDA 40101 T**	**VKDP 43100 T**	⚠	VW
103081	**VKDA 35113 T**	**VKDP 33101 T**	⚠	AUDI
103081	**VKDA 40104 T**	**VKDP 43106 T**	⚠	AUDI
103083	**VKDA 35113 T**	**VKDP 33101 T**		AUDI
103085	**VKDA 35116 T**	**VKDP 33111 T**	⚠	AUDI
103085	**VKDA 35118 T**	**VKDP 33111 T**	⚠	AUDI
103085	**VKDA 40122 T**	**VKDP 43102 T**	⚠	AUDI
103085	**VKDA 40122 T**	**VKDP 43104 T**	⚠	AUDI
103085	**VKDA 40121 T**	**VKDP 43102 T**	⚠	AUDI
103085	**VKDA 40121 T**	**VKDP 43104 T**	⚠	AUDI
103086	**VKDA 35116 T**	**VKDP 33111 T**	⚠	AUDI
103086	**VKDA 35118 T**	**VKDP 33111 T**	⚠	AUDI
103086	**VKDA 40121 T**		⚠	AUDI
103086	**VKDA 40122 T**		⚠	AUDI
103089	**VKDA 35113 T**		⚠	AUDI
103089	**VKDA 40104 T**		⚠	AUDI
103091	**VKDA 35113 T**			AUDI
103093	**VKDA 35113 T**		⚠	AUDI
103093	**VKDA 40104 T**		⚠	AUDI
103095	**VKDA 35113 T**			AUDI
103097	**VKDC 35802 T**	**VKDP 33800 T**	⚠	BMW
103097	**VKDA 40805 T**		⚠	BMW
103100	**VKDC 35814 T**	**VKDP 33800 T**	⚠	BMW
103100	**VKDA 40805 T**		⚠	BMW
103102	**VKDC 35802 T**	**VKDP 33800 T**	⚠	BMW
103102	**VKDA 40805 T**		⚠	BMW
103105	**VKDA 40805 T**		⚠	BMW
103105	**VKDC 35802 T**		⚠	BMW
103106	**VKDA 40805 T**		⚠	BMW
103106	**VKDC 35802 T**		⚠	BMW
103107	**VKDC 35814 T**	**VKDP 33800 T**	⚠	BMW
103107	**VKDA 40805 T**		⚠	BMW
103111	**VKDA 35500 T**	**VKDP 33500 T**		OPEL
103113	**VKDA 35500 T**	**VKDP 33500 T**		OPEL
103134	**VKDA 35113 T**	**VKDP 33101 T**	⚠	VW
103134	***VKDA 40123 T***	**VKDP 43106 T**	⚠	VW
103134	**VKDA 40104 T**	**VKDP 43106 T**	⚠	VW
103136	**VKDA 35113 T**	**VKDP 33101 T**		VW
103138	**VKDA 35110 T**	**VKDP 33100 T**	⚠	VW
103138	**VKDC 35101 T**	**VKDP 33100 T**	⚠	VW
103138	**VKDA 40101 T**	**VKDP 43102 T**	⚠	VW
103139	**VKDC 35101 T**	**VKDP 33100 T**	⚠	VW
103139	**VKDC 35102 T**	**VKDP 33100 T**	⚠	VW
103139	**VKDA 40101 T**	**VKDP 43100 T**	⚠	VW
103141	**VKDC 35101 T**	**VKDP 33108 T**	⚠	VW
103141	**VKDC 35102 T**	**VKDP 33108 T**	⚠	VW

103141	**VKDA 35110 T**	**VKDP 33108 T**	⚠	VW	103262	**VKDA 35110 T**	**VKDP 33108 T**	⚠	VW
103141	**VKDA 40101 T**	**VKDP 43100 T**	⚠	VW	103262	**VKDA 40101 T**	**VKDP 43100 T**	⚠	VW
103143	**VKDC 35101 T**	**VKDP 33108 T**	⚠	VW	103266	**VKDA 35113 T**	**VKDP 33101 T**	⚠	VW
103143	**VKDA 35110 T**	**VKDP 33108 T**	⚠	VW	103266	**VKDA 40104 T**	**VKDP 43106 T**	⚠	VW
103143	**VKDA 40101 T**	**VKDP 43100 T**	⚠	VW	103266	***VKDA 40123 T***	**VKDP 43106 T**	⚠	VW
103145	**VKDA 35113 T**	**VKDP 33101 T**	⚠	VW	103270	**VKDA 35113 T**	**VKDP 33101 T**		VW
103145	**VKDA 40104 T**	**VKDP 43106 T**	⚠	VW	103274	**VKDA 35113 T**	**VKDP 33101 T**	⚠	VW
103145	***VKDA 40123 T***	**VKDP 43106 T**	⚠	VW	103274	**VKDA 40104 T**		⚠	VW
103147	**VKDA 35113 T**	**VKDP 33101 T**		VW	103274	***VKDA 40123 T***		⚠	VW
103149	**VKDA 35113 T**	**VKDP 33101 T**	⚠	VW	103278	**VKDA 35111 T**	**VKDP 33107 T**	⚠	VW
103149	**VKDA 40104 T**		⚠	VW	103278	**VKDA 40101 T**	**VKDP 43103 T**	⚠	VW
103149	***VKDA 40123 T***		⚠	VW	103279	**VKDA 35115 T**	**VKDP 33800 T**	⚠	VW
103151	**VKDA 35111 T**	**VKDP 33107 T**	⚠	VW	103279	**VKDA 40101 T**	**VKDP 43103 T**	⚠	VW
103151	**VKDA 40101 T**	**VKDP 43103 T**	⚠	VW	103280	**VKD 35021 T**	**VKDP 33104 T**		AUDI
103152	**VKDA 35115 T**	**VKDP 33800 T**	⚠	VW	103281	**VKD 35021 T**	**VKDP 33104 T**		AUDI
103152	**VKDA 40101 T**	**VKDP 43103 T**	⚠	VW	103282		**VKDP 43101 T**	⚠	AUDI
103154	**VKDA 35113 T**	**VKDP 33101 T**	⚠	AUDI	103282	**VKDC 35100 T**	**VKDP 32103 T**	⚠	AUDI
103154	**VKDA 40104 T**	**VKDP 43106 T**	⚠	AUDI	103284	**VKDC 35100 T**	**VKDP 32103 T**	⚠	AUDI
103158	**VKDA 35113 T**	**VKDP 33101 T**		AUDI	103284	**VKDA 40113 T**	**VKDP 43101 T**	⚠	AUDI
103162	**VKDA 35116 T**	**VKDP 33111 T**	⚠	AUDI	103285	**VKDC 35100 T**	**VKDP 32103 T**	⚠	AUDI
103162	**VKDA 35118 T**	**VKDP 33111 T**	⚠	AUDI	103285	**VKDA 40113 T**	**VKDP 43101 T**	⚠	AUDI
103162	**VKDA 40121 T**	**VKDP 43102 T**	⚠	AUDI	103286	**VKDC 35100 T**	**VKDP 32103 T**	⚠	AUDI
103162	**VKDA 40121 T**	**VKDP 43104 T**	⚠	AUDI	103286	**VKDA 40113 T**		⚠	AUDI
103162	**VKDA 40122 T**	**VKDP 43102 T**	⚠	AUDI	103287	**VKDC 35100 T**	**VKDP 32103 T**	⚠	AUDI
103162	**VKDA 40122 T**	**VKDP 43104 T**	⚠	AUDI	103287	**VKDA 40113 T**		⚠	AUDI
103163	**VKDA 35118 T**	**VKDP 33111 T**	⚠	AUDI	103288	**VKDA 35113 T**	**VKDP 33101 T**	⚠	AUDI
103163	**VKDA 35116 T**	**VKDP 33111 T**	⚠	AUDI	103288	**VKDA 40104 T**	**VKDP 43106 T**	⚠	AUDI
103163	**VKDA 40121 T**		⚠	AUDI	103290	**VKDA 35113 T**	**VKDP 33101 T**	⚠	AUDI
103163	**VKDA 40122 T**		⚠	AUDI	103290	**VKDA 40104 T**	**VKDP 43106 T**	⚠	AUDI
103164	***VKD 35035 T***			VOLVO	103291	**VKDA 35118 T**	**VKDP 33111 T**	⚠	AUDI
103169	**VKDA 35116 T**		⚠	AUDI	103291	**VKDA 35116 T**	**VKDP 33111 T**	⚠	AUDI
103169	**VKDA 35118 T**		⚠	AUDI	103291	**VKDA 40121 T**	**VKDP 43102 T**	⚠	AUDI
103170	**VKDA 35113 T**		⚠	AUDI	103291	**VKDA 40121 T**	**VKDP 43104 T**	⚠	AUDI
103170	**VKDA 40104 T**		⚠	AUDI	103291	**VKDA 40122 T**	**VKDP 43102 T**	⚠	AUDI
103174	**VKDA 35113 T**			AUDI	103291	**VKDA 40122 T**	**VKDP 43104 T**	⚠	AUDI
103178	**VKDA 35113 T**		⚠	AUDI	103292	**VKDA 35116 T**	**VKDP 33111 T**	⚠	AUDI
103178	**VKDA 40104 T**		⚠	AUDI	103292	**VKDA 35118 T**	**VKDP 33111 T**	⚠	AUDI
103182	**VKDA 35113 T**			AUDI	103292	**VKDA 40121 T**	**VKDP 43102 T**	⚠	AUDI
103186	**VKDC 35802 T**	**VKDP 33800 T**	⚠	BMW	103292	**VKDA 40121 T**	**VKDP 43104 T**	⚠	AUDI
103186	**VKDA 40805 T**		⚠	BMW	103292	**VKDA 40122 T**	**VKDP 43102 T**	⚠	AUDI
103187	**VKDC 35814 T**			BMW	103292	**VKDA 40122 T**	**VKDP 43104 T**	⚠	AUDI
103191	**VKDC 35814 T**	**VKDP 33800 T**	⚠	BMW	103293	**VKDA 35116 T**	**VKDP 33111 T**	⚠	AUDI
103191	**VKDA 40805 T**		⚠	BMW	103293	**VKDA 35118 T**	**VKDP 33111 T**	⚠	AUDI
103195	**VKDC 35802 T**	**VKDP 33800 T**	⚠	BMW	103293	**VKDA 40121 T**	**VKDP 43102 T**	⚠	AUDI
103195	**VKDA 40805 T**		⚠	BMW	103293	**VKDA 40121 T**	**VKDP 43104 T**	⚠	AUDI
103196	**VKDC 35814 T**	**VKDP 33800 T**	⚠	BMW	103293	**VKDA 40122 T**	**VKDP 43102 T**	⚠	AUDI
103196	**VKDA 40805 T**		⚠	BMW	103293	**VKDA 40122 T**	**VKDP 43104 T**	⚠	AUDI
103200	**VKDA 40805 T**		⚠	BMW	103294	**VKDA 35116 T**	**VKDP 33111 T**	⚠	AUDI
103200	**VKDC 35802 T**		⚠	BMW	103294	**VKDA 35118 T**	**VKDP 33111 T**	⚠	AUDI
103201	**VKDA 40805 T**		⚠	BMW	103294	**VKDA 40122 T**	**VKDP 43104 T**	⚠	AUDI
103201	**VKDC 35802 T**		⚠	BMW	103294	**VKDA 40122 T**	**VKDP 43102 T**	⚠	AUDI
103202	**VKDC 35814 T**	**VKDP 33800 T**	⚠	BMW	103294	**VKDA 40121 T**	**VKDP 43104 T**	⚠	AUDI
103202	**VKDA 40805 T**		⚠	BMW	103294	**VKDA 40121 T**	**VKDP 43102 T**	⚠	AUDI
103206	**VKDA 35500 T**	**VKDP 33500 T**		OPEL	103295	**VKD 35021 T**	**VKDP 33104 T**		AUDI
103210	**VKDA 35500 T**	**VKDP 33500 T**		OPEL	103296	**VKD 35021 T**	**VKDP 33104 T**		AUDI
103245	**VKDA 35113 T**	**VKDP 33101 T**		VW	103299	**VKDC 35801 T**	**VKDP 33800 T**	⚠	BMW
103249	**VKDA 35113 T**	**VKDP 33101 T**		VW	103299	**VKDA 40805 T**		⚠	BMW
103253	**VKDC 35101 T**	**VKDP 33100 T**	⚠	VW	103300	**VKDC 35801 T**	**VKDP 33800 T**	⚠	BMW
103253	**VKDA 35110 T**	**VKDP 33100 T**	⚠	VW	103300	**VKDA 40805 T**		⚠	BMW
103253	**VKDA 40101 T**	**VKDP 43102 T**	⚠	VW	103301	**VKDC 35801 T**	**VKDP 33800 T**	⚠	BMW
103254	**VKDC 35102 T**	**VKDP 33100 T**	⚠	VW	103301	**VKDA 40805 T**		⚠	BMW
103254	**VKDC 35101 T**	**VKDP 33100 T**	⚠	VW	103302	**VKDC 35801 T**	**VKDP 33800 T**	⚠	BMW
103254	**VKDA 40101 T**	**VKDP 43100 T**	⚠	VW	103302	**VKDA 40805 T**		⚠	BMW
103258	**VKDA 35110 T**	**VKDP 33108 T**	⚠	VW	103303	**VKDC 35801 T**	**VKDP 33800 T**	⚠	BMW
103258	**VKDC 35101 T**	**VKDP 33108 T**	⚠	VW	103303	**VKDA 40805 T**		⚠	BMW
103258	**VKDC 35102 T**	**VKDP 33108 T**	⚠	VW	103304	**VKDC 35801 T**	**VKDP 33800 T**	⚠	BMW
103258	**VKDA 40101 T**	**VKDP 43100 T**	⚠	VW	103304	**VKDA 40805 T**		⚠	BMW
103262	**VKDC 35101 T**	**VKDP 33108 T**	⚠	VW	103305	**VKDC 35802 T**	**VKDP 33800 T**	⚠	BMW

BILSTEIN .../...

103305	**VKDA 40805 T**		⚠	BMW
103307	**VKDC 35802 T**	**VKDP 33800 T**	⚠	BMW
103307	**VKDA 40805 T**		⚠	BMW
103310	**VKDC 35802 T**	**VKDP 33800 T**	⚠	BMW
103310	**VKDA 40805 T**		⚠	BMW
103312	**VKDC 35802 T**	**VKDP 33800 T**	⚠	BMW
103312	**VKDA 40805 T**		⚠	BMW
103313	**VKDC 35802 T**	**VKDP 33800 T**	⚠	BMW
103313	**VKDA 40805 T**		⚠	BMW
103314	**VKDC 35802 T**	**VKDP 33800 T**	⚠	BMW
103314	**VKDA 40805 T**		⚠	BMW
103315	**VKDC 35802 T**	**VKDP 33800 T**	⚠	BMW
103315	**VKDA 40805 T**		⚠	BMW
103316	**VKDC 35802 T**	**VKDP 33800 T**	⚠	BMW
103316	**VKDA 40805 T**		⚠	BMW
103318	**VKDA 40805 T**		⚠	BMW
103318	**VKDC 35802 T**		⚠	BMW
103319	**VKDA 40805 T**		⚠	BMW
103319	**VKDC 35802 T**		⚠	BMW
103321	**VKDA 40805 T**		⚠	BMW
103321	**VKDC 35802 T**		⚠	BMW
103324	**VKDA 40805 T**		⚠	BMW
103324	**VKDC 35802 T**		⚠	BMW
103326	**VKDA 40805 T**		⚠	BMW
103326	**VKDC 35802 T**		⚠	BMW
103327	**VKDC 35802 T**	**VKDP 33800 T**	⚠	BMW
103327	**VKDA 40805 T**		⚠	BMW
103328	**VKDC 35802 T**	**VKDP 33800 T**	⚠	BMW
103328	**VKDA 40805 T**		⚠	BMW
103329	**VKDC 35802 T**	**VKDP 33800 T**	⚠	BMW
103329	**VKDA 40805 T**		⚠	BMW
103330	**VKDC 35802 T**	**VKDP 33800 T**	⚠	BMW
103330	**VKDA 40805 T**		⚠	BMW
103331	**VKDC 35801 T**	**VKDP 33800 T**	⚠	BMW
103331	**VKDA 40809 T**		⚠	BMW
103333	**VKDC 35801 T**	**VKDP 33800 T**	⚠	BMW
103333	**VKDA 40809 T**		⚠	BMW
103334		**VKDP 33800 T**	⚠	BMW
103334	**VKDA 40809 T**		⚠	BMW
103335	**VKDC 35801 T**	**VKDP 33800 T**	⚠	BMW
103335	**VKDA 40809 T**		⚠	BMW
103336	**VKDC 35801 T**	**VKDP 33800 T**	⚠	BMW
103336	**VKDA 40809 T**		⚠	BMW
103337		**VKDP 33800 T**	⚠	BMW
103337	**VKDA 40809 T**		⚠	BMW
103338		**VKDP 33800 T**	⚠	BMW
103338	**VKDA 40809 T**		⚠	BMW
103339		**VKDP 33800 T**	⚠	BMW
103339	**VKDA 40809 T**		⚠	BMW
103340	**VKDC 35801 T**	**VKDP 33800 T**	⚠	BMW
103340	**VKDA 40809 T**		⚠	BMW
103341	**VKDC 35801 T**	**VKDP 33800 T**	⚠	BMW
103341	**VKDA 40809 T**		⚠	BMW
103342	**VKDC 35801 T**	**VKDP 33800 T**	⚠	BMW
103342	**VKDA 40809 T**		⚠	BMW
103343	**VKDC 35801 T**	**VKDP 33800 T**	⚠	BMW
103343	**VKDA 40809 T**		⚠	BMW
103344		**VKDP 33800 T**	⚠	BMW
103344	**VKDA 40809 T**		⚠	BMW
103345		**VKDP 33800 T**	⚠	BMW
103345	**VKDA 40809 T**		⚠	BMW
103346		**VKDP 33800 T**	⚠	BMW
103346	**VKDA 40809 T**		⚠	BMW
103347	**VKDC 35801 T**	**VKDP 33800 T**	⚠	BMW
103347	**VKDA 40809 T**		⚠	BMW

103349	**VKDC 35801 T**	**VKDP 33800 T**	⚠	BMW
103349	**VKDA 40809 T**		⚠	BMW
103351	**VKDC 35801 T**	**VKDP 33800 T**	⚠	BMW
103351	**VKDA 40809 T**		⚠	BMW
103352	**VKDA 40809 T**			BMW
103353		**VKDP 33800 T**		BMW
103355		**VKDP 33800 T**		BMW
103356	**VKDA 40813 T**			BMW
103357	**VKDA 40805 T**		⚠	BMW
103357	**VKDC 35802 T**		⚠	BMW
103358	**VKDC 35204 T**	**VKDP 33300 T**		FIAT
103360	**VKDA 35200 T**	**VKDP 33300 T**	⚠	FIAT
103360	**VKDC 35204 T**	**VKDP 33300 T**	⚠	FIAT
103362	**VKDA 35200 T**	**VKDP 33202 T**		FIAT
103364	**VKDA 35200 T**	**VKDP 33202 T**		FIAT
103366	**VKDA 35200 T**	**VKDP 33202 T**		FIAT
103368	**VKDA 35200 T**	**VKDP 33202 T**		FIAT
103370	**VKDA 35401 T**	**VKDP 33401 T**	⚠	FORD
103370	**VKDA 40407 T**		⚠	FORD
103374	**VKDA 35401 T**	**VKDP 31400 T**	⚠	FORD
103374	**VKDA 35401 T**	**VKDP 33401 T**	⚠	FORD
103374	**VKDA 40407 T**		⚠	FORD
103378	**VKDA 35403 T**	**VKDP 31400 T**	⚠	FORD
103378	**VKDA 40407 T**		⚠	FORD
103379	**VKDA 35403 T**	**VKDP 31400 T**	⚠	FORD
103379	**VKDA 40407 T**		⚠	FORD
103388	**VKDA 35403 T**	**VKDP 33409 T**		FORD
103395		***VKDP 83300 T***		HONDA
103396		***VKDP 83300 T***		HONDA
103397		***VKDP 83300 T***		HONDA
103402	**VKDA 35200 T**	**VKDP 33202 T**		LANCIA
103404	**VKDA 35810 T**	**VKDP 33801 T**		MERCEDES BENZ
103406	**VKDA 35810 T**	**VKDP 33801 T**		MERCEDES BENZ
103408	**VKDA 35810 T**	**VKDP 33801 T**		MERCEDES BENZ
103414		**VKDP 33801 T**		MERCEDES BENZ
103415		**VKDP 33801 T**		MERCEDES BENZ
103416		**VKDP 33801 T**		MERCEDES BENZ
103417		**VKDP 33801 T**		MERCEDES BENZ
103418		**VKDP 33801 T**		MERCEDES BENZ
103419		**VKDP 33801 T**		MERCEDES BENZ
103420		**VKDP 33801 T**		MERCEDES BENZ
103421		**VKDP 33801 T**		MERCEDES BENZ
103422		**VKDP 33801 T**		MERCEDES BENZ
103423		**VKDP 33801 T**		MERCEDES BENZ
103424		**VKDP 33801 T**		MERCEDES BENZ
103425		**VKDP 33801 T**		MERCEDES BENZ
103437	**VKDA 35503 T**	**VKDP 33500 T**	⚠	OPEL
103437	**VKDA 35503 T**	**VKDP 33501 T**	⚠	OPEL
103437	**VKDA 35515 T**	**VKDP 33500 T**	⚠	OPEL
103437	**VKDA 35515 T**	**VKDP 33501 T**	⚠	OPEL
103439	**VKDA 35503 T**	**VKDP 33501 T**	⚠	OPEL
103439	**VKDA 35503 T**	**VKDP 33500 T**	⚠	OPEL
103439	**VKDA 35515 T**	**VKDP 33501 T**	⚠	OPEL
103439	**VKDA 35515 T**	**VKDP 33500 T**	⚠	OPEL
103441	**VKDA 35501 T**	**VKDP 33500 T**		OPEL
103443	**VKDA 35500 T**	**VKDP 33500 T**		OPEL
103455	**VKDA 35510 T**	**VKDP 33504 T**		OPEL
103456	**VKDA 35510 T**	**VKDP 33504 T**	⚠	OPEL
103456	**VKDA 35511 T**	**VKDP 33504 T**	⚠	OPEL
103457	**VKDA 35501 T**	**VKDP 33500 T**		OPEL
103458	**VKDA 35501 T**	**VKDP 33500 T**		OPEL
103459	**VKDA 35615 T**	**VKDP 32600 T**		RENAULT
103460	**VKDA 35615 T**	**VKDP 32600 T**		RENAULT
103461	**VKDA 35615 T**	**VKDP 32600 T**	⚠	RENAULT
103461	**VKDA 35616 T**	**VKDP 32600 T**	⚠	RENAULT
103463	**VKDA 35615 T**	**VKDP 32600 T**		RENAULT
103465		**VKDP 32600 T**		RENAULT
103493	**VKDA 35110 T**	**VKDP 33100 T**	⚠	VW

103493	**VKDC 35101 T**	**VKDP 33100 T**	⚠	VW	103535	***VKDA 40123 T***	**VKDP 43106 T**	⚠	VW
103493	**VKDA 40101 T**	**VKDP 43102 T**	⚠	VW	103536	**VKDA 35113 T**	**VKDP 33101 T**	⚠	VW
103496	**VKDA 35110 T**		⚠	VW	103536	**VKDA 40104 T**	**VKDP 43106 T**	⚠	VW
103496	**VKDA 40101 T**		⚠	VW	103536	***VKDA 40123 T***	**VKDP 43106 T**	⚠	VW
103497	**VKDA 35110 T**		⚠	VW	103537	**VKDA 35113 T**	**VKDP 33101 T**	⚠	VW
103497	**VKDA 40101 T**		⚠	VW	103537	***VKDA 40123 T***	**VKDP 43106 T**	⚠	VW
103498	**VKDA 35110 T**	**VKDP 33100 T**	⚠	VW	103537	**VKDA 40104 T**	**VKDP 43106 T**	⚠	VW
103498	**VKDC 35101 T**	**VKDP 33100 T**	⚠	VW	103538	**VKDA 35113 T**	**VKDP 33101 T**	⚠	VW
103498	**VKDA 40101 T**	**VKDP 43102 T**	⚠	VW	103538	**VKDA 40104 T**	**VKDP 43106 T**	⚠	VW
103500	**VKDC 35101 T**	**VKDP 33100 T**	⚠	VW	103538	***VKDA 40123 T***	**VKDP 43106 T**	⚠	VW
103500	**VKDA 35110 T**	**VKDP 33100 T**	⚠	VW	103539	**VKDC 35105 T**	**VKDP 33100 T**	⚠	VW
103500	**VKDA 40101 T**	**VKDP 43102 T**	⚠	VW	103539		**VKDP 43101 T**	⚠	VW
103501	**VKDC 35105 T**	**VKDP 33100 T**	⚠	VW	103541	**VKDC 35102 T**	**VKDP 33100 T**	⚠	VW
103501		**VKDP 43101 T**	⚠	VW	103541	**VKDA 40101 T**	**VKDP 43100 T**	⚠	VW
103503	**VKDC 35105 T**	**VKDP 33100 T**	⚠	VW	103542	**VKDC 35102 T**	**VKDP 33100 T**	⚠	VW
103503		**VKDP 43101 T**	⚠	VW	103542	**VKDA 40101 T**	**VKDP 43100 T**	⚠	VW
103505	**VKDC 35102 T**	**VKDP 33100 T**	⚠	VW	103543	**VKDC 35103 T**	**VKDP 33102 T**	⚠	VW
103505	**VKDA 40101 T**	**VKDP 43100 T**	⚠	VW	103543	**VKDA 40102 T**	**VKDP 43102 T**	⚠	VW
103506	**VKDC 35102 T**	**VKDP 33100 T**	⚠	VW	103545	**VKDC 35103 T**	**VKDP 33102 T**	⚠	VW
103506	**VKDA 40101 T**	**VKDP 43100 T**	⚠	VW	103545	**VKDA 40102 T**	**VKDP 43102 T**	⚠	VW
103507	**VKDA 35110 T**	**VKDP 33100 T**	⚠	VW	103547	**VKDA 35111 T**	**VKDP 33107 T**	⚠	VW
103507	**VKDA 40101 T**	**VKDP 43100 T**	⚠	VW	103547	**VKDA 40101 T**	**VKDP 43103 T**	⚠	VW
103509	**VKDC 35102 T**	**VKDP 33108 T**	⚠	VW	103549	**VKDC 35103 T**	**VKDP 33102 T**	⚠	VW
103509	**VKDA 35110 T**	**VKDP 33108 T**	⚠	VW	103549	**VKDA 40102 T**	**VKDP 43102 T**	⚠	VW
103509	**VKDA 40101 T**	**VKDP 43100 T**	⚠	VW	103551	**VKDC 35105 T**	**VKDP 33100 T**	⚠	VW
103510	**VKDC 35101 T**	**VKDP 33108 T**	⚠	VW	103551		**VKDP 43101 T**	⚠	VW
103510	**VKDA 35110 T**	**VKDP 33108 T**	⚠	VW	103553	**VKDC 35105 T**	**VKDP 33100 T**	⚠	VW
103510	**VKDC 35102 T**	**VKDP 33108 T**	⚠	VW	103553		**VKDP 43101 T**	⚠	VW
103510	**VKDA 40101 T**	**VKDP 43100 T**	⚠	VW	103555	**VKDA 35110 T**	**VKDP 33107 T**	⚠	VW
103511	**VKDC 35101 T**	**VKDP 33108 T**	⚠	VW	103555	**VKDA 40101 T**	**VKDP 43100 T**	⚠	VW
103511	**VKDA 35110 T**	**VKDP 33108 T**	⚠	VW	103557	**VKDA 35110 T**	**VKDP 33107 T**	⚠	VW
103511	**VKDA 40101 T**	**VKDP 43100 T**	⚠	VW	103557	**VKDA 40101 T**	**VKDP 43100 T**	⚠	VW
103513	**VKDA 35110 T**	**VKDP 33108 T**	⚠	VW	103559	**VKDC 35102 T**	**VKDP 33107 T**	⚠	VW
103513	**VKDC 35101 T**	**VKDP 33108 T**	⚠	VW	103559	**VKDA 35110 T**	**VKDP 33107 T**	⚠	VW
103513	**VKDA 40101 T**	**VKDP 43100 T**	⚠	VW	103559	**VKDC 35101 T**	**VKDP 33107 T**	⚠	VW
103521	**VKDA 35110 T**	**VKDP 33100 T**	⚠	VW	103559	**VKDA 40101 T**	**VKDP 43100 T**	⚠	VW
103521	**VKDA 40101 T**	**VKDP 43100 T**	⚠	VW	103561	**VKDC 35102 T**	**VKDP 33107 T**	⚠	VW
103523	**VKDA 35110 T**	**VKDP 33108 T**	⚠	VW	103561	**VKDA 35110 T**	**VKDP 33107 T**	⚠	VW
103523	**VKDC 35102 T**	**VKDP 33108 T**	⚠	VW	103561	**VKDC 35101 T**	**VKDP 33107 T**	⚠	VW
103523	**VKDA 40101 T**	**VKDP 43100 T**	⚠	VW	103561	**VKDA 40101 T**	**VKDP 43100 T**	⚠	VW
103524	**VKDC 35102 T**	**VKDP 33108 T**	⚠	VW	104476	**VKDA 35116 T**	**VKDP 33111 T**	⚠	AUDI
103524	**VKDA 35110 T**	**VKDP 33108 T**	⚠	VW	104476	**VKDA 35118 T**	**VKDP 33111 T**	⚠	AUDI
103524	**VKDC 35101 T**	**VKDP 33108 T**	⚠	VW	104551	**VKDA 35515 T**	**VKDP 33501 T**	⚠	OPEL
103524	**VKDA 40101 T**	**VKDP 43100 T**	⚠	VW	104551	**VKDA 35515 T**	**VKDP 33500 T**	⚠	OPEL
103525	**VKDC 35102 T**	**VKDP 33108 T**	⚠	VW	104551	**VKDA 35503 T**	**VKDP 33501 T**	⚠	OPEL
103525	**VKDC 35101 T**	**VKDP 33108 T**	⚠	VW	104551	**VKDA 35503 T**	**VKDP 33500 T**	⚠	OPEL
103525	**VKDA 35110 T**	**VKDP 33108 T**	⚠	VW	104552	**VKDA 35503 T**	**VKDP 33501 T**	⚠	OPEL
103525	**VKDA 40101 T**	**VKDP 44100 T**	⚠	VW	104552	**VKDA 35515 T**	**VKDP 33501 T**	⚠	OPEL
103527	**VKDC 35102 T**	**VKDP 33108 T**	⚠	VW	104717	**VKDA 35116 T**	**VKDP 33111 T**	⚠	AUDI
103527	**VKDA 35110 T**	**VKDP 33108 T**	⚠	VW	104717	**VKDA 35118 T**	**VKDP 33111 T**	⚠	AUDI
103527	**VKDC 35101 T**	**VKDP 33108 T**	⚠	VW	104718	**VKDA 35118 T**	**VKDP 33111 T**	⚠	AUDI
103527	**VKDA 40101 T**	**VKDP 44100 T**	⚠	VW	104718	**VKDA 35116 T**	**VKDP 33111 T**	⚠	AUDI
103529	**VKDC 35101 T**	**VKDP 33108 T**	⚠	VW	104745	**VKDC 35802 T**	**VKDP 33800 T**	⚠	BMW
103529	**VKDA 35110 T**	**VKDP 33108 T**	⚠	VW	104745	**VKDA 40805 T**		⚠	BMW
103529	**VKDC 35102 T**	**VKDP 33108 T**	⚠	VW	104747	**VKDA 40805 T**		⚠	BMW
103529	**VKDA 40101 T**	**VKDP 44100 T**	⚠	VW	104747	**VKDC 35814 T**		⚠	BMW
103531	**VKDC 35102 T**	**VKDP 33108 T**	⚠	VW	104749	**VKDA 35113 T**	**VKDP 33101 T**	⚠	VW
103531	**VKDA 35110 T**	**VKDP 33108 T**	⚠	VW	104749	**VKDA 40104 T**	**VKDP 43106 T**	⚠	VW
103531	**VKDC 35101 T**	**VKDP 33108 T**	⚠	VW	104749	***VKDA 40123 T***	**VKDP 43106 T**	⚠	VW
103531	**VKDA 40101 T**	**VKDP 44100 T**	⚠	VW	104750	**VKDA 35113 T**	**VKDP 33101 T**		SEAT
103533	**VKDA 35113 T**	**VKDP 33101 T**	⚠	VW	104751	**VKDA 35113 T**	**VKDP 33101 T**		SEAT
103533	***VKDA 40123 T***	**VKDP 43106 T**	⚠	VW	104752	**VKDA 35113 T**	**VKDP 33101 T**	⚠	SEAT
103533	**VKDA 40104 T**	**VKDP 43106 T**	⚠	VW	104752	**VKDA 40104 T**	**VKDP 43106 T**	⚠	SEAT
103534	**VKDA 35113 T**	**VKDP 33101 T**	⚠	VW	104752	***VKDA 40123 T***	**VKDP 43106 T**	⚠	SEAT
103534	***VKDA 40123 T***	**VKDP 43106 T**	⚠	VW	104753	**VKDA 35113 T**	**VKDP 33101 T**	⚠	SEAT
103534	**VKDA 40104 T**	**VKDP 43106 T**	⚠	VW	104753	***VKDA 40123 T***	**VKDP 43106 T**	⚠	SEAT
103535	**VKDA 35113 T**	**VKDP 33101 T**	⚠	VW	104753	**VKDA 40104 T**	**VKDP 43106 T**	⚠	SEAT
103535	**VKDA 40104 T**	**VKDP 43106 T**	⚠	VW	104754		**VKDP 44400 T**	⚠	FORD

BILSTEIN .../...

104754	**VKDA 35417 T**	**VKDP 33402 T**	⚠	FORD
104754	**VKDA 35425 T**	**VKDP 33402 T**	⚠	FORD
104755	**VKDA 35425 T**	**VKDP 33402 T**	⚠	FORD
104755	**VKDA 35417 T**	**VKDP 33402 T**	⚠	FORD
104755	**VKDA 40404 T**	**VKDP 44400 T**	⚠	FORD
104756	**VKDA 35425 T**	**VKDP 33402 T**	⚠	FORD
104756	**VKDA 35417 T**	**VKDP 33402 T**	⚠	FORD
104756	**VKDA 40404 T**	**VKDP 44400 T**	⚠	FORD
104762	**VKDA 35113 T**		⚠	VW
104762	**VKDA 40104 T**		⚠	VW
104762	***VKDA 40123 T***		⚠	VW
104769	**VKDA 35113 T**		⚠	VW
104769	**VKDA 40104 T**		⚠	VW
104769	***VKDA 40123 T***		⚠	VW
104830	**VKDA 35113 T**	**VKDP 33101 T**	⚠	SEAT
104830	***VKDA 40123 T***	**VKDP 43106 T**	⚠	SEAT
104830	**VKDA 40104 T**	**VKDP 43106 T**	⚠	SEAT
104831	**VKDA 35113 T**	**VKDP 33101 T**	⚠	SEAT
104831	**VKDA 40104 T**	**VKDP 43106 T**	⚠	SEAT
104831	***VKDA 40123 T***	**VKDP 43106 T**	⚠	SEAT
104849	***VKDA 40128 T***			SKODA
104853		**VKDP 33802 T**		MERCEDES BENZ
104854		**VKDP 33802 T**		MERCEDES BENZ
104855		**VKDP 33802 T**		MERCEDES BENZ
104870	**VKDC 35102 T**	**VKDP 33100 T**	⚠	VW
104870	**VKDA 40101 T**	**VKDP 43100 T**	⚠	VW
104872	**VKDA 40805 T**		⚠	BMW
104872	**VKDC 35802 T**		⚠	BMW
105056	**VKDC 35821 T**	***VKDP 33803 T***	⚠	MINI
105056	***VKDA 40815 T***	***VKDP 43800 T***	⚠	MINI
105057	**VKDC 35821 T**	***VKDP 33803 T***	⚠	MINI
105057	***VKDA 40815 T***	***VKDP 43800 T***	⚠	MINI
105063	**VKDA 35508 T**	**VKDP 34500 T**		OPEL
105065	**VKDA 35508 T**	**VKDP 34500 T**		OPEL
105066	**VKDA 35508 T**	**VKDP 34500 T**		OPEL
105070	**VKDA 35508 T**			OPEL
105074	**VKDA 35115 T**		⚠	SEAT
105074	**VKDA 40104 T**		⚠	SEAT
105074	***VKDA 40123 T***		⚠	SEAT
105075	**VKDA 35115 T**		⚠	SEAT
105075	**VKDA 40104 T**		⚠	SEAT
105075	***VKDA 40123 T***		⚠	SEAT
105082	**VKDA 35118 T**	**VKDP 33111 T**		AUDI
105084	**VKDA 35118 T**	**VKDP 33111 T**		AUDI
105085	**VKDA 35118 T**	**VKDP 33111 T**	⚠	AUDI
105085	**VKDA 40110 T**		⚠	AUDI
105086	**VKDA 35118 T**	**VKDP 33111 T**	⚠	AUDI
105086	**VKDA 40110 T**		⚠	AUDI
105091	**VKDA 35115 T**		⚠	SEAT
105091	**VKDA 40104 T**		⚠	SEAT
105091	***VKDA 40123 T***		⚠	SEAT
105092	**VKDA 35115 T**		⚠	SEAT
105092	**VKDA 40104 T**		⚠	SEAT
105092	***VKDA 40123 T***		⚠	SEAT
105099	**VKDA 35115 T**	**VKDP 33800 T**	⚠	SKODA
105099	**VKDA 40104 T**		⚠	SKODA
105102	**VKDA 35115 T**	**VKDP 33800 T**	⚠	SKODA
105102	**VKDA 40104 T**		⚠	SKODA
105105	**VKDA 35115 T**	**VKDP 33800 T**	⚠	SKODA
105105	**VKDA 40104 T**		⚠	SKODA
105108		**VKDP 33800 T**	⚠	VW
105108	**VKDA 35115 T**	**VKDP 33800 T**	⚠	VW
105108	**VKDA 40104 T**		⚠	VW
105109	**VKDA 35115 T**	**VKDP 33800 T**	⚠	VW
105109		**VKDP 33800 T**	⚠	VW
105109	**VKDA 40104 T**		⚠	VW
105110	**VKDA 35115 T**	**VKDP 33800 T**	⚠	VW
105110		**VKDP 33800 T**	⚠	VW
105110	**VKDA 40104 T**		⚠	VW
105116		**VKDP 33500 T**		OPEL
105117		**VKDP 33500 T**		OPEL
105118		**VKDP 33500 T**		OPEL
105119		**VKDP 33500 T**		OPEL
105120		**VKDP 33500 T**		OPEL
105121		**VKDP 33500 T**		OPEL
105125	***VKDA 35123 T***	**VKDP 33111 T**	⚠	AUDI
105125	***VKDA 40129 T***		⚠	AUDI
105126	***VKDA 35123 T***	**VKDP 33111 T**	⚠	AUDI
105126	***VKDA 40129 T***		⚠	AUDI
105127	***VKDA 35123 T***	**VKDP 33111 T**	⚠	AUDI
105127	***VKDA 40129 T***		⚠	AUDI
105128	***VKDA 35123 T***	**VKDP 33111 T**	⚠	AUDI
105128	***VKDA 40129 T***		⚠	AUDI
105132	***VKDA 35123 T***	**VKDP 33111 T**	⚠	AUDI
105132	***VKDA 40129 T***		⚠	AUDI
105133	***VKDA 35123 T***	**VKDP 33111 T**	⚠	AUDI
105133	***VKDA 40129 T***		⚠	AUDI
105134	***VKDA 35123 T***	**VKDP 33111 T**	⚠	AUDI
105134	***VKDA 40129 T***		⚠	AUDI
105136	***VKDA 35123 T***	**VKDP 33111 T**	⚠	AUDI
105136	***VKDA 40129 T***		⚠	AUDI
105143	**VKDA 35113 T**		⚠	SEAT
105143	**VKDA 40104 T**		⚠	SEAT
105143	***VKDA 40123 T***		⚠	SEAT
105144	**VKDA 35113 T**		⚠	SEAT
105144	**VKDA 40104 T**		⚠	SEAT
105144	***VKDA 40123 T***		⚠	SEAT
105145		**VKDP 33802 T**		MERCEDES BENZ
105150	**VKDA 35110 T**		⚠	SEAT
105150	**VKDA 40101 T**	**VKDP 43100 T**	⚠	SEAT
105150	**VKDC 35102 T**		⚠	SEAT
105151	***VKDA 35233 T***	**VKDP 33208 T**		FIAT
105152	**VKDA 35607 T**	**VKDP 31601 T**		RENAULT
105153		**VKDP 33111 T**		VW
105155	**VKDA 35118 T**	**VKDP 33111 T**	⚠	AUDI
105155	**VKDA 40110 T**		⚠	AUDI
105161	**VKDA 35118 T**	**VKDP 33111 T**		AUDI
105164		**VKDP 44400 T**	⚠	FORD
105164	**VKDA 35425 T**	**VKDP 33402 T**	⚠	FORD
105164	**VKDA 35417 T**	**VKDP 33402 T**	⚠	FORD
105165	**VKDA 35425 T**	**VKDP 33402 T**	⚠	FORD
105165	**VKDA 35417 T**	**VKDP 33402 T**	⚠	FORD
105165	**VKDA 40404 T**	**VKDP 44400 T**	⚠	FORD
105166	**VKDA 35417 T**	**VKDP 33402 T**	⚠	FORD
105166	**VKDA 35425 T**	**VKDP 33402 T**	⚠	FORD
105166	**VKDA 40404 T**	**VKDP 44400 T**	⚠	FORD
105179		***VKDP 83300 T***		HONDA
105183	**VKDA 35110 T**		⚠	VW
105183	**VKDA 35116 T**		⚠	VW
105183	**VKDA 35118 T**		⚠	VW
105183	**VKDA 40109 T**		⚠	VW
105184	**VKDA 35118 T**	**VKDP 33111 T**	⚠	VW
105184	**VKDA 35116 T**	**VKDP 33111 T**	⚠	VW
105184	**VKDA 40110 T**		⚠	VW
105185	**VKDA 35118 T**	**VKDP 33111 T**	⚠	VW
105185	**VKDA 35116 T**	**VKDP 33111 T**	⚠	VW
105185	**VKDA 40109 T**		⚠	VW
105186		**VKDP 33111 T**	⚠	VW
105186	**VKDA 35118 T**	**VKDP 33111 T**	⚠	VW
105186	**VKDA 40110 T**		⚠	VW
105186	***VKDA 40128 T***		⚠	VW
105187		**VKDP 33111 T**	⚠	VW
105187	**VKDA 35118 T**	**VKDP 33111 T**	⚠	VW

105187	**VKDA 40109 T**			VW	105317	**VKDA 35615 T**	**VKDP 32600 T**		RENAULT
105188		**VKDP 33111 T**		VW	105318	**VKDA 35615 T**	**VKDP 32600 T**		RENAULT
105188	***VKDA 40128 T***			VW	105319	**VKDA 35616 T**	**VKDP 32600 T**		RENAULT
105189		**VKDP 33111 T**		VW	105319	**VKDA 35615 T**	**VKDP 32600 T**		RENAULT
105212	**VKDA 35315 T**	**VKDP 33304 T**		PEUGEOT	105320	**VKDA 35615 T**	**VKDP 32600 T**		RENAULT
105212	**VKDA 40304 T**			PEUGEOT	105321	**VKDA 35615 T**	**VKDP 32600 T**		RENAULT
105215	**VKDA 35315 T**	**VKDP 33304 T**		PEUGEOT	105322	**VKDA 35615 T**	**VKDP 32600 T**		RENAULT
105215	**VKDA 40304 T**			PEUGEOT	105322	**VKD 35001 T**	**VKDP 32600 T**		RENAULT
105216	**VKDA 35315 T**	**VKDP 33304 T**		PEUGEOT	105337	**VKDC 35814 T**	**VKDP 33800 T**		BMW
105216	**VKDA 40304 T**			PEUGEOT	105337	**VKDA 40805 T**			BMW
105226	**VKDA 35116 T**	**VKDP 33111 T**		VW	105349	**VKDA 35110 T**	**VKDP 33100 T**		VW
105226	**VKDA 35118 T**	**VKDP 33111 T**		VW	105349	**VKDA 40101 T**	**VKDP 43100 T**		VW
105226	**VKDA 40110 T**			VW	105350	**VKDA 35110 T**	**VKDP 33100 T**		VW
105227	**VKDA 35118 T**	**VKDP 33111 T**		VW	105350	**VKDA 40101 T**	**VKDP 43100 T**		VW
105227	**VKDA 35116 T**	**VKDP 33111 T**		VW	105351	**VKDA 40101 T**			VW
105227	**VKDA 40110 T**			VW	105351	**VKDA 35110 T**	**VKDP 33100 T**		VW
105231	**VKDA 35110 T**			VW	105352	**VKDA 40101 T**			VW
105231	**VKDA 35116 T**			VW	105352	**VKDA 35110 T**	**VKDP 33100 T**		VW
105231	**VKDA 35118 T**			VW	105373	**VKDC 35802 T**			BMW
105231	**VKDA 40109 T**			VW	105374	**VKDC 35802 T**			BMW
105234	**VKDA 35118 T**	**VKDP 33111 T**		VW	105375	**VKDC 35814 T**	**VKDP 33800 T**		BMW
105234		**VKDP 33111 T**		VW	105375	**VKDA 40805 T**			BMW
105234	**VKDA 40110 T**			VW	105376	**VKDC 35814 T**			BMW
105234	***VKDA 40128 T***			VW	105377	**VKDC 35814 T**			BMW
105235	**VKDA 35118 T**	**VKDP 33111 T**		VW	105381	**VKDC 35814 T**	**VKDP 33800 T**		BMW
105235		**VKDP 33111 T**		VW	105381	**VKDA 40805 T**			BMW
105235	**VKDA 40110 T**			VW	105382	**VKDC 35814 T**	**VKDP 33800 T**		BMW
105235	***VKDA 40128 T***			VW	105382	**VKDA 40805 T**			BMW
105238	**VKDA 40109 T**			VW	105387	**VKDA 35424 T**			FORD
105238	**VKDA 35118 T**	**VKDP 33111 T**		VW	105387	**VKDA 40416 T**			FORD
105238		**VKDP 33111 T**		VW	105393	**VKDC 35821 T**	***VKDP 33803 T***		MINI
105241	**VKDA 40109 T**			VW	105393	***VKDA 40815 T***	***VKDP 43800 T***		MINI
105241	**VKDA 35116 T**	**VKDP 33111 T**		VW	105396	**VKDC 35821 T**	***VKDP 33803 T***		MINI
105241	**VKDA 35118 T**	**VKDP 33111 T**		VW	105396	***VKDA 40815 T***	***VKDP 43800 T***		MINI
105242		**VKDP 33111 T**		VW	105425		**VKDP 33802 T**		MERCEDES BENZ
105243	**VKDA 35116 T**	**VKDP 33111 T**		VW	105426		**VKDP 33802 T**		MERCEDES BENZ
105243	**VKDA 35118 T**	**VKDP 33111 T**		VW	105429		**VKDP 33802 T**		MERCEDES BENZ
105243	**VKDA 40110 T**			VW	105432		**VKDP 33802 T**		MERCEDES BENZ
105244	**VKDA 35118 T**	**VKDP 33111 T**		VW	105440	**VKDA 35122 T**			VW
105244	**VKDA 35116 T**	**VKDP 33111 T**		VW	105440	***VKDA 40126 T***			VW
105244	**VKDA 40110 T**			VW	105441	**VKDA 35122 T**			VW
105286	**VKDA 35115 T**	**VKDP 33800 T**		SKODA	105441	***VKDA 40126 T***			VW
105286	**VKDA 40104 T**			SKODA	105442	***VKDA 35233 T***			FIAT
105288	**VKDA 35115 T**	**VKDP 33800 T**		SKODA	105443	***VKDA 35233 T***			FIAT
105288	**VKDA 40104 T**			SKODA	105445	***VKDA 35123 T***			AUDI
105290	**VKDA 40104 T**			SKODA	105445	***VKDA 40129 T***			AUDI
105290	**VKDA 35115 T**	**VKDP 33800 T**		SKODA	105446	**VKDC 35814 T**			BMW
105296	**VKDA 35116 T**	**VKDP 33111 T**		VW	105446	**VKDC 35815 T**			BMW
105296	**VKDA 35118 T**	**VKDP 33111 T**		VW	105493	**VKDA 35113 T**			VW
105296	**VKDA 40110 T**			VW	105493	**VKDA 40104 T**			VW
105297	**VKDA 35118 T**	**VKDP 33111 T**		VW	105493	***VKDA 40123 T***			VW
105297		**VKDP 33111 T**		VW	105494	**VKDA 35113 T**			VW
105297	**VKDA 40110 T**			VW	105494	**VKDA 40104 T**			VW
105297	***VKDA 40128 T***			VW	105494	***VKDA 40123 T***			VW
105298	**VKDA 35118 T**	**VKDP 33111 T**		VW	105495	**VKDA 40104 T**			VW
105298	**VKDA 35116 T**	**VKDP 33111 T**		VW	105495	**VKDA 35113 T**	**VKDP 33101 T**		VW
105298	**VKDA 40110 T**			VW	105495	***VKDA 40123 T***			VW
105299		**VKDP 33111 T**		VW	105496	**VKDA 40104 T**			VW
105299	***VKDA 40128 T***			VW	105496	**VKDA 35113 T**	**VKDP 33101 T**		VW
105312	**VKDC 35821 T**	***VKDP 33803 T***		MINI	105496	***VKDA 40123 T***			VW
105312	***VKDA 40815 T***	***VKDP 43800 T***		MINI	105501	**VKDA 35625 T**	**VKDP 31603 T**		RENAULT
105313	**VKDC 35821 T**	***VKDP 33803 T***		MINI	105533	**VKDC 35802 T**	**VKDP 33800 T**		BMW
105313	***VKDA 40815 T***	***VKDP 43800 T***		MINI	105533	**VKDA 40805 T**			BMW
105314	**VKDC 35814 T**			BMW	105534	**VKDC 35814 T**	**VKDP 33800 T**		BMW
105314	**VKDC 35815 T**			BMW	105534	**VKDA 40805 T**			BMW
105316	**VKDA 35315 T**	**VKDP 33304 T**		PEUGEOT	105620	**VKDC 35204 T**	**VKDP 33300 T**		FIAT
105316	**VKDA 40304 T**			PEUGEOT	105621	**VKDA 35401 T**	**VKDP 33401 T**		FORD
105317	**VKDA 35616 T**	**VKDP 32600 T**		RENAULT	105621	**VKDA 40407 T**			FORD

BILSTEIN .../...

105622	**VKDA 35401 T**		⚠	FORD
105622	**VKDA 40407 T**		⚠	FORD
105623	**VKDA 35401 T**	**VKDP 33401 T**	⚠	FORD
105623	**VKDA 40407 T**		⚠	FORD
105624	**VKDA 35401 T**	**VKDP 33401 T**	⚠	FORD
105624	**VKDA 40407 T**		⚠	FORD
105625	**VKDA 35401 T**		⚠	FORD
105625	**VKDA 40407 T**		⚠	FORD
105626	**VKDA 35401 T**	**VKDP 33401 T**	⚠	FORD
105626	**VKDA 40407 T**		⚠	FORD
105627	**VKDA 35403 T**	**VKDP 33409 T**		FORD
105630		***VKDP 83300 T***		HONDA
105631	**VKDA 35811 T**			MERCEDES BENZ
105632	**VKDA 35811 T**			MERCEDES BENZ
105633	**VKDA 35811 T**			MERCEDES BENZ
105634	**VKDA 35811 T**			MERCEDES BENZ
105635	**VKDA 35811 T**			MERCEDES BENZ
105636	**VKDA 35811 T**	**VKDP 33801 T**		MERCEDES BENZ
105637	**VKDA 35811 T**	**VKDP 33801 T**		MERCEDES BENZ
105638	**VKDA 35811 T**	**VKDP 33801 T**		MERCEDES BENZ
105639	**VKDA 35811 T**	**VKDP 33801 T**		MERCEDES BENZ
105640	**VKDA 35811 T**	**VKDP 33801 T**		MERCEDES BENZ
105641	**VKDA 35811 T**	**VKDP 33801 T**		MERCEDES BENZ
105646	**VKDA 35501 T**	**VKDP 33500 T**		OPEL
105647	**VKDA 35501 T**	**VKDP 33500 T**		OPEL
105648	**VKDA 35616 T**	**VKDP 32600 T**	⚠	RENAULT
105648	**VKDA 35615 T**	**VKDP 32600 T**	⚠	RENAULT
105649	**VKDA 40101 T**		⚠	VW
105649	**VKDA 35110 T**	**VKDP 33100 T**	⚠	VW
105650	**VKDA 40101 T**		⚠	VW
105650	**VKDA 35110 T**	**VKDP 33100 T**	⚠	VW
105652		**VKDP 43102 T**	⚠	VW
105652	**VKDC 35103 T**	**VKDP 33102 T**	⚠	VW
105653	**VKDA 35118 T**	**VKDP 33111 T**	⚠	AUDI
105653	**VKDA 35116 T**	**VKDP 33111 T**	⚠	AUDI
105656	**VKDA 40110 T**		⚠	VW
105656	**VKDA 35118 T**	**VKDP 33111 T**	⚠	VW
105656	**VKDA 35116 T**	**VKDP 33111 T**	⚠	VW
105657		**VKDP 33111 T**		VW
105658	**VKDA 35401 T**	**VKDP 33401 T**	⚠	FORD
105658	**VKDA 40407 T**		⚠	FORD
105659	**VKDC 35103 T**	**VKDP 33102 T**	⚠	VW
105659	**VKDA 40102 T**	**VKDP 43102 T**	⚠	VW
105672	**VKDA 35111 T**	**VKDP 33107 T**		VW
105726	**VKDA 35111 T**	**VKDP 33107 T**		VW
105727	**VKDA 35111 T**	**VKDP 33107 T**		SEAT
105749	***VKDA 35123 T***	**VKDP 33111 T**	⚠	AUDI
105749	***VKDA 40129 T***		⚠	AUDI
105750	***VKDA 35123 T***	**VKDP 33111 T**	⚠	AUDI
105750	***VKDA 40129 T***		⚠	AUDI
105751	***VKDA 35123 T***	**VKDP 33111 T**	⚠	AUDI
105751	***VKDA 40129 T***		⚠	AUDI
105752	***VKDA 35123 T***	**VKDP 33111 T**	⚠	AUDI
105752	***VKDA 40129 T***		⚠	AUDI
105756	***VKDA 35123 T***	**VKDP 33111 T**	⚠	AUDI
105756	***VKDA 40129 T***		⚠	AUDI
105757	***VKDA 35123 T***	**VKDP 33111 T**	⚠	AUDI
105757	***VKDA 40129 T***		⚠	AUDI
105758	***VKDA 35123 T***	**VKDP 33111 T**	⚠	AUDI
105758	***VKDA 40129 T***		⚠	AUDI
105759	***VKDA 35123 T***	**VKDP 33111 T**	⚠	AUDI
105759	***VKDA 40129 T***		⚠	AUDI
105760	***VKDA 35123 T***	**VKDP 33111 T**	⚠	AUDI
105760	***VKDA 40129 T***		⚠	AUDI
105783	***VKDA 35123 T***		⚠	AUDI
105783	***VKDA 40129 T***		⚠	AUDI
105784	**VKDA 35116 T**		⚠	AUDI
105784	**VKDA 35118 T**		⚠	AUDI
105785	**VKDA 35118 T**			AUDI
105806	**VKDC 35627 T**		⚠	VOLVO
105806	**VKDA 40616 T**		⚠	VOLVO
105808	**VKDA 40616 T**		⚠	VOLVO
105808	**VKDC 35627 T**		⚠	VOLVO
105808	**VKDC 35634 T**		⚠	VOLVO
105809	**VKDA 40616 T**		⚠	VOLVO
105809	**VKDC 35627 T**		⚠	VOLVO
105809	**VKDC 35634 T**		⚠	VOLVO
105818	**VKDA 35115 T**		⚠	SEAT
105818	**VKDA 40104 T**		⚠	SEAT
105818	***VKDA 40123 T***		⚠	SEAT
105819	**VKDA 35115 T**		⚠	SEAT
105819	**VKDA 40104 T**		⚠	SEAT
105819	***VKDA 40123 T***		⚠	SEAT
105820	**VKDA 35115 T**	**VKDP 33800 T**	⚠	SKODA
105820	**VKDA 40104 T**		⚠	SKODA
105821	**VKDA 35115 T**	**VKDP 33800 T**	⚠	SKODA
105821	**VKDA 40104 T**		⚠	SKODA
105823	**VKDA 35230 T**	**VKDP 33207 T**	⚠	ALFA ROMEO
105823	**VKDA 40204 T**		⚠	ALFA ROMEO
105825	**VKDA 35230 T**	**VKDP 33207 T**		ALFA ROMEO
105826	**VKDA 35230 T**	**VKDP 33207 T**		ALFA ROMEO
105870	**VKDA 35110 T**	**VKDP 33107 T**	⚠	VW
105870	**VKDC 35101 T**	**VKDP 33107 T**	⚠	VW
105870	**VKDC 35102 T**	**VKDP 33107 T**	⚠	VW
105870	**VKDA 40101 T**	**VKDP 43100 T**	⚠	VW
105871	**VKDC 35102 T**	**VKDP 33100 T**	⚠	VW
105871	**VKDA 40101 T**	**VKDP 43100 T**	⚠	VW
105872	**VKDC 35102 T**	**VKDP 33100 T**	⚠	VW
105872	**VKDA 40101 T**	**VKDP 43100 T**	⚠	VW
105873	**VKDA 40101 T**		⚠	VW
105873	**VKDA 35110 T**	**VKDP 33100 T**	⚠	VW
105874	**VKDA 35110 T**	**VKDP 33108 T**	⚠	VW
105874	**VKDC 35101 T**	**VKDP 33108 T**	⚠	VW
105874	**VKDC 35102 T**	**VKDP 33108 T**	⚠	VW
105874	**VKDA 40101 T**	**VKDP 43100 T**	⚠	VW
105875	**VKDA 35110 T**	**VKDP 33100 T**	⚠	VW
105875	**VKDA 40101 T**	**VKDP 43100 T**	⚠	VW
105876	**VKDA 35110 T**	**VKDP 33100 T**	⚠	VW
105876	**VKDC 35101 T**	**VKDP 33100 T**	⚠	VW
105876	**VKDA 40101 T**	**VKDP 43102 T**	⚠	VW
105878	**VKDC 35102 T**	**VKDP 33107 T**	⚠	VW
105878	**VKDA 35110 T**	**VKDP 33107 T**	⚠	VW
105878	**VKDC 35101 T**	**VKDP 33107 T**	⚠	VW
105878	**VKDA 40101 T**	**VKDP 43100 T**	⚠	VW
105884		**VKDP 33800 T**	⚠	VW
105884	**VKDA 35115 T**	**VKDP 33800 T**	⚠	VW
105884	**VKDA 40104 T**		⚠	VW
105885	**VKDA 40104 T**		⚠	SKODA
105885	**VKDA 35115 T**	**VKDP 33800 T**	⚠	SKODA
105887	**VKDA 35116 T**		⚠	AUDI
105887	**VKDA 35118 T**		⚠	AUDI
105888	**VKDA 35116 T**		⚠	AUDI
105888	**VKDA 35118 T**		⚠	AUDI
105889	**VKDA 35401 T**	**VKDP 33401 T**	⚠	FORD
105889	**VKDA 35401 T**	**VKDP 31400 T**	⚠	FORD
105889	**VKDA 40407 T**		⚠	FORD
105890	**VKDA 35401 T**		⚠	FORD
105890	**VKDA 40407 T**		⚠	FORD
105891	**VKDA 35401 T**	**VKDP 33401 T**	⚠	FORD
105891	**VKDA 40407 T**		⚠	FORD
105892	**VKDA 35401 T**	**VKDP 33401 T**	⚠	FORD
105892	**VKDA 40407 T**		⚠	FORD
105893	**VKDA 35401 T**		⚠	FORD

105893	**VKDA 40407 T**		⚠	FORD	106045	**VKDA 35515 T**	**VKDP 33501 T**	⚠	OPEL
105894	**VKDA 35401 T**	**VKDP 33401 T**	⚠	FORD	106045	**VKDA 35515 T**	**VKDP 33500 T**	⚠	OPEL
105894	**VKDA 40407 T**		⚠	FORD	106046	**VKDA 35113 T**	**VKDP 33101 T**	⚠	SEAT
105903	**VKDA 40110 T**		⚠	AUDI	106046	**VKDA 40104 T**	**VKDP 43106 T**	⚠	SEAT
105903	**VKDA 35118 T**	**VKDP 33111 T**	⚠	AUDI	106046	***VKDA 40123 T***	**VKDP 43106 T**	⚠	SEAT
105904	**VKDA 40110 T**		⚠	AUDI	106047	**VKDA 35113 T**	**VKDP 33101 T**	⚠	SEAT
105904	**VKDA 35118 T**	**VKDP 33111 T**	⚠	AUDI	106047	***VKDA 40123 T***	**VKDP 43106 T**	⚠	SEAT
105907	**VKDA 35122 T**		⚠	VW	106047	**VKDA 40104 T**	**VKDP 43106 T**	⚠	SEAT
105907	***VKDA 40124 T***		⚠	VW	106048	**VKDA 35113 T**	**VKDP 33101 T**	⚠	SEAT
105907	***VKDA 40125 T***		⚠	VW	106048	***VKDA 40123 T***	**VKDP 43106 T**	⚠	SEAT
105908	**VKDA 35122 T**		⚠	VW	106048	**VKDA 40104 T**	**VKDP 43106 T**	⚠	SEAT
105908	***VKDA 40124 T***		⚠	VW	106049	**VKDA 35113 T**	**VKDP 33101 T**	⚠	SEAT
105908	***VKDA 40125 T***		⚠	VW	106049	**VKDA 40104 T**	**VKDP 43106 T**	⚠	SEAT
105912	**VKDA 35625 T**	**VKDP 31603 T**		RENAULT	106049	***VKDA 40123 T***	**VKDP 43106 T**	⚠	SEAT
105913	**VKDA 35122 T**		⚠	VW	106050	**VKDA 35113 T**	**VKDP 33101 T**	⚠	VW
105913	***VKDA 40124 T***		⚠	VW	106050	**VKDA 40104 T**	**VKDP 43106 T**	⚠	VW
105913	***VKDA 40125 T***		⚠	VW	106050	***VKDA 40123 T***	**VKDP 43106 T**	⚠	VW
105914	**VKDA 35122 T**		⚠	VW	106051	**VKDA 35113 T**	**VKDP 33101 T**	⚠	VW
105914	***VKDA 40124 T***		⚠	VW	106051	***VKDA 40123 T***	**VKDP 43106 T**	⚠	VW
105914	***VKDA 40125 T***		⚠	VW	106051	**VKDA 40104 T**	**VKDP 43106 T**	⚠	VW
105921	**VKDC 35821 T**	***VKDP 33803 T***	⚠	MINI	106052	**VKDA 35113 T**	**VKDP 33101 T**	⚠	VW
105921	***VKDA 40815 T***	***VKDP 43800 T***	⚠	MINI	106052	***VKDA 40123 T***	**VKDP 43106 T**	⚠	VW
105922	**VKDC 35821 T**	***VKDP 33803 T***	⚠	MINI	106052	**VKDA 40104 T**	**VKDP 43106 T**	⚠	VW
105922	***VKDA 40815 T***	***VKDP 43800 T***	⚠	MINI	106053	**VKDA 35113 T**	**VKDP 33101 T**	⚠	VW
105923	**VKDC 35821 T**	***VKDP 33803 T***	⚠	MINI	106053	***VKDA 40123 T***	**VKDP 43106 T**	⚠	VW
105923	***VKDA 40815 T***	***VKDP 43800 T***	⚠	MINI	106053	**VKDA 40104 T**	**VKDP 43106 T**	⚠	VW
105924	**VKDC 35821 T**	***VKDP 33803 T***	⚠	MINI	106054	**VKDA 35113 T**	**VKDP 33101 T**	⚠	SKODA
105924	***VKDA 40815 T***	***VKDP 43800 T***	⚠	MINI	106054	**VKDA 40104 T**	**VKDP 43106 T**	⚠	SKODA
105930	**VKDA 40110 T**		⚠	AUDI	106055	**VKDA 35113 T**	**VKDP 33101 T**	⚠	SKODA
105930	**VKDA 35118 T**	**VKDP 33111 T**	⚠	AUDI	106055	**VKDA 40104 T**	**VKDP 43106 T**	⚠	SKODA
105931	**VKDA 40110 T**		⚠	AUDI	106057	**VKDA 35113 T**	**VKDP 33101 T**	⚠	VW
105931	**VKDA 35118 T**	**VKDP 33111 T**	⚠	AUDI	106057	***VKDA 40123 T***	**VKDP 43106 T**	⚠	VW
105932	**VKDA 35118 T**	**VKDP 33111 T**		AUDI	106058	**VKDA 35113 T**	**VKDP 33101 T**	⚠	VW
105933	**VKDA 35118 T**	**VKDP 33111 T**		AUDI	106058	***VKDA 40123 T***	**VKDP 43106 T**	⚠	VW
105934	**VKDA 35118 T**	**VKDP 33111 T**		AUDI	106059	**VKDA 35113 T**	**VKDP 33101 T**	⚠	VW
105935	**VKDA 35118 T**	**VKDP 33111 T**		AUDI	106059	***VKDA 40123 T***	**VKDP 43106 T**	⚠	VW
105936	**VKDA 40110 T**		⚠	AUDI	106060	**VKDA 35113 T**	**VKDP 33101 T**	⚠	VW
105936	**VKDA 35118 T**	**VKDP 33111 T**	⚠	AUDI	106060	***VKDA 40123 T***	**VKDP 43106 T**	⚠	VW
105937	**VKDA 40110 T**		⚠	AUDI	106061	**VKDA 35113 T**	**VKDP 33101 T**	⚠	SKODA
105937	**VKDA 35118 T**	**VKDP 33111 T**	⚠	AUDI	106061	***VKDA 40123 T***	**VKDP 43106 T**	⚠	SKODA
105938	**VKDA 40110 T**		⚠	AUDI	106061	**VKDA 40104 T**	**VKDP 43106 T**	⚠	SKODA
105938	**VKDA 35118 T**	**VKDP 33111 T**	⚠	AUDI	106062		**VKDP 33500 T**		OPEL
105939	**VKDA 40110 T**		⚠	AUDI	106063	**VKDA 35500 T**	**VKDP 33500 T**		OPEL
105939	**VKDA 35118 T**	**VKDP 33111 T**	⚠	AUDI	106065	**VKDC 35102 T**	**VKDP 33108 T**	⚠	SEAT
105946	**VKDC 35821 T**	***VKDP 33803 T***	⚠	MINI	106065	**VKDC 35102 T**	**VKDP 33100 T**	⚠	SEAT
105946	***VKDA 40815 T***	***VKDP 43800 T***	⚠	MINI	106065	**VKDA 35110 T**	**VKDP 33108 T**	⚠	SEAT
105952	**VKDC 35821 T**	***VKDP 33803 T***	⚠	MINI	106065	**VKDA 35110 T**	**VKDP 33100 T**	⚠	SEAT
105952	***VKDA 40815 T***	***VKDP 43800 T***	⚠	MINI	106065	**VKDA 40101 T**	**VKDP 43105 T**	⚠	SEAT
105965	**VKDC 35814 T**			BMW	106067	**VKDA 35110 T**	**VKDP 33108 T**	⚠	SEAT
105966	**VKDC 35814 T**			BMW	106067	**VKDA 35110 T**	**VKDP 33100 T**	⚠	SEAT
105982	***VKD 35035 T***			MAZDA	106067	**VKDC 35102 T**	**VKDP 33108 T**	⚠	SEAT
106017	**VKDA 35122 T**		⚠	VW	106067	**VKDC 35102 T**	**VKDP 33100 T**	⚠	SEAT
106017	***VKDA 40126 T***		⚠	VW	106067	**VKDA 40101 T**	**VKDP 43105 T**	⚠	SEAT
106018	**VKDA 35122 T**		⚠	VW	106070	**VKDA 35111 T**	**VKDP 33107 T**	⚠	VW
106018	***VKDA 40126 T***		⚠	VW	106070	**VKDA 40101 T**	**VKDP 43103 T**	⚠	VW
106034		**VKDP 43101 T**	⚠	AUDI	106071	**VKDA 35111 T**	**VKDP 33107 T**		VW
106034	**VKDC 35100 T**	**VKDP 32103 T**	⚠	AUDI	106072	**VKDA 35111 T**	**VKDP 33107 T**		VW
106035	**VKDC 35100 T**	**VKDP 32103 T**		AUDI	106073	**VKDA 35111 T**	**VKDP 33107 T**		SEAT
106041	**VKDA 35113 T**	**VKDP 33101 T**	⚠	AUDI	106074	**VKDA 35111 T**	**VKDP 33107 T**		SEAT
106041	**VKDA 40104 T**	**VKDP 43106 T**	⚠	AUDI	106076	**VKDA 35113 T**	**VKDP 33101 T**	⚠	SKODA
106042	**VKDA 35113 T**	**VKDP 33101 T**	⚠	AUDI	106076	**VKDA 40104 T**	**VKDP 43106 T**	⚠	SKODA
106042	**VKDA 40104 T**	**VKDP 43106 T**	⚠	AUDI	106076	***VKDA 40123 T***	**VKDP 43106 T**	⚠	SKODA
106044	**VKDA 35515 T**	**VKDP 33501 T**	⚠	OPEL	106080	**VKDA 35403 T**	**VKDP 33409 T**		FORD
106044	**VKDA 35515 T**	**VKDP 33500 T**	⚠	OPEL	106096	**VKDC 35814 T**			BMW
106044	**VKDA 35503 T**	**VKDP 33501 T**	⚠	OPEL	106097	**VKDC 35814 T**			BMW
106044	**VKDA 35503 T**	**VKDP 33500 T**	⚠	OPEL	106109	**VKDA 35625 T**	**VKDP 31603 T**		RENAULT
106045	**VKDA 35503 T**	**VKDP 33501 T**	⚠	OPEL	106149	**VKDC 35802 T**	**VKDP 33800 T**	⚠	BMW
106045	**VKDA 35503 T**	**VKDP 33500 T**	⚠	OPEL	106149	**VKDA 40805 T**		⚠	BMW

BILSTEIN .../...

106150	**VKDC 35802 T**	**VKDP 33800 T**	⚠	BMW
106150	**VKDA 40805 T**		⚠	BMW
106151	**VKDA 40805 T**		⚠	BMW
106151	**VKDC 35802 T**		⚠	BMW
106152	**VKDA 40805 T**		⚠	BMW
106152	**VKDC 35802 T**		⚠	BMW
106153	**VKDA 35110 T**	**VKDP 33100 T**	⚠	VW
106153	**VKDA 40101 T**	**VKDP 43100 T**	⚠	VW
106154	**VKDA 40101 T**		⚠	VW
106154	**VKDA 35110 T**	**VKDP 33100 T**	⚠	VW
106159	**VKDA 35110 T**	**VKDP 33108 T**	⚠	VW
106159	**VKDC 35101 T**	**VKDP 33108 T**	⚠	VW
106159	**VKDA 40101 T**	**VKDP 43100 T**	⚠	VW
106161	**VKDC 35102 T**	**VKDP 33108 T**	⚠	VW
106161	**VKDA 35110 T**	**VKDP 33108 T**	⚠	VW
106161	**VKDC 35101 T**	**VKDP 33108 T**	⚠	VW
106161	**VKDA 40101 T**	**VKDP 43100 T**	⚠	VW
106178	**VKDA 35115 T**	**VKDP 33100 T**	⚠	SEAT
106178	**VKDA 40101 T**	**VKDP 43105 T**	⚠	SEAT
106179	**VKDA 35115 T**	**VKDP 33100 T**	⚠	SEAT
106179	**VKDA 40101 T**	**VKDP 43105 T**	⚠	SEAT
106186	**VKDC 35814 T**			BMW
106188	**VKDA 35113 T**			VW
106189	**VKDA 35113 T**			VW
106196	**VKDA 35315 T**	**VKDP 33304 T**	⚠	PEUGEOT
106196	**VKDA 40304 T**		⚠	PEUGEOT
106197	**VKDA 35315 T**	**VKDP 33304 T**	⚠	PEUGEOT
106197	**VKDA 40304 T**		⚠	PEUGEOT
106198	**VKDA 35230 T**	**VKDP 33207 T**	⚠	ALFA ROMEO
106198	**VKDA 40204 T**		⚠	ALFA ROMEO
106199	**VKDA 35230 T**	**VKDP 33207 T**	⚠	ALFA ROMEO
106199	**VKDA 40204 T**		⚠	ALFA ROMEO
106200	**VKDA 35230 T**	**VKDP 33207 T**		ALFA ROMEO
106201	**VKDA 35230 T**	**VKDP 33207 T**		ALFA ROMEO
106202	**VKDA 35230 T**	**VKDP 33207 T**		ALFA ROMEO
106203	**VKDA 35230 T**	**VKDP 33207 T**		ALFA ROMEO
106205	**VKDA 40110 T**		⚠	AUDI
106205	**VKDA 35118 T**	**VKDP 33111 T**	⚠	AUDI
106206	**VKDA 35118 T**	**VKDP 33111 T**		AUDI
106209	**VKDA 35122 T**		⚠	AUDI
106209	***VKDA 40125 T***		⚠	AUDI
106210	**VKDA 35122 T**		⚠	AUDI
106210	***VKDA 40125 T***		⚠	AUDI
106211	**VKDA 35122 T**		⚠	AUDI
106211	***VKDA 40125 T***		⚠	AUDI
106212	**VKDA 35122 T**		⚠	AUDI
106212	***VKDA 40125 T***		⚠	AUDI
106220	**VKDA 35122 T**		⚠	AUDI
106220	***VKDA 40125 T***		⚠	AUDI
106221	**VKDA 35122 T**		⚠	AUDI
106221	***VKDA 40125 T***		⚠	AUDI
106224	**VKDA 35122 T**		⚠	AUDI
106224	***VKDA 40125 T***		⚠	AUDI
106225	**VKDA 35122 T**		⚠	AUDI
106225	***VKDA 40125 T***		⚠	AUDI
106235	**VKDA 35122 T**		⚠	VW
106235	***VKDA 40124 T***		⚠	VW
106235	***VKDA 40125 T***		⚠	VW
106236	**VKDA 35122 T**		⚠	VW
106236	***VKDA 40124 T***		⚠	VW
106236	***VKDA 40125 T***		⚠	VW
106237	**VKDA 35122 T**		⚠	VW
106237	***VKDA 40124 T***		⚠	VW
106237	***VKDA 40125 T***		⚠	VW
106238	**VKDA 35122 T**		⚠	VW
106238	***VKDA 40124 T***		⚠	VW
106238	***VKDA 40125 T***		⚠	VW
106241	**VKDC 35204 T**	**VKDP 33300 T**		FIAT
106244	**VKDC 35204 T**	**VKDP 33300 T**		FIAT
106273	***VKDA 35123 T***		⚠	AUDI
106273	***VKDA 40129 T***		⚠	AUDI
106277	**VKDA 35110 T**	**VKDP 33108 T**	⚠	SEAT
106277	**VKDA 35110 T**	**VKDP 33100 T**	⚠	SEAT
106277	**VKDC 35102 T**	**VKDP 33108 T**	⚠	SEAT
106277	**VKDC 35102 T**	**VKDP 33100 T**	⚠	SEAT
106277	**VKDA 40101 T**	**VKDP 43105 T**	⚠	SEAT
106278	**VKDC 35102 T**	**VKDP 33108 T**	⚠	SEAT
106278	**VKDC 35102 T**	**VKDP 33100 T**	⚠	SEAT
106278	**VKDA 35110 T**	**VKDP 33108 T**	⚠	SEAT
106278	**VKDA 35110 T**	**VKDP 33100 T**	⚠	SEAT
106278	**VKDA 40101 T**	**VKDP 43105 T**	⚠	SEAT
106281	**VKDA 35110 T**	**VKDP 33108 T**	⚠	SEAT
106281	**VKDA 35110 T**	**VKDP 33100 T**	⚠	SEAT
106281	**VKDC 35102 T**	**VKDP 33108 T**	⚠	SEAT
106281	**VKDC 35102 T**	**VKDP 33100 T**	⚠	SEAT
106281	**VKDA 40101 T**	**VKDP 43105 T**	⚠	SEAT
106282	**VKDA 35110 T**	**VKDP 33108 T**	⚠	SEAT
106282	**VKDA 35110 T**	**VKDP 33100 T**	⚠	SEAT
106282	**VKDC 35102 T**	**VKDP 33108 T**	⚠	SEAT
106282	**VKDC 35102 T**	**VKDP 33100 T**	⚠	SEAT
106282	**VKDA 40101 T**	**VKDP 43105 T**	⚠	SEAT
106285	**VKDA 35115 T**	**VKDP 33100 T**	⚠	SEAT
106285	**VKDA 40101 T**	**VKDP 43105 T**	⚠	SEAT
106288	**VKDA 35115 T**		⚠	SEAT
106288	**VKDA 40101 T**		⚠	SEAT
106289	**VKDA 35115 T**	**VKDP 33100 T**	⚠	SEAT
106289	**VKDA 40101 T**	**VKDP 43105 T**	⚠	SEAT
106291		**VKDP 33500 T**		OPEL
106297	***VKDA 40129 T***		⚠	AUDI
106297	***VKDA 35123 T***	**VKDP 33111 T**	⚠	AUDI
106298	***VKDA 40129 T***		⚠	AUDI
106298	***VKDA 35123 T***	**VKDP 33111 T**	⚠	AUDI
106301	**VKDA 40304 T**		⚠	PEUGEOT
106301	**VKDA 35315 T**	**VKDP 33304 T**	⚠	PEUGEOT
106304	***VKD 35035 T***			VOLVO
106308	**VKDA 35118 T**			AUDI
106380	**VKDA 35500 T**	**VKDP 33500 T**		VAUXHALL
106382	**VKDA 35503 T**	**VKDP 33501 T**	⚠	VAUXHALL
106382	**VKDA 35503 T**	**VKDP 33500 T**	⚠	VAUXHALL
106382	**VKDA 35515 T**	**VKDP 33501 T**	⚠	VAUXHALL
106382	**VKDA 35515 T**	**VKDP 33500 T**	⚠	VAUXHALL
106383	**VKDA 35515 T**	**VKDP 33501 T**	⚠	VAUXHALL
106383	**VKDA 35515 T**	**VKDP 33500 T**	⚠	VAUXHALL
106383	**VKDA 35503 T**	**VKDP 33501 T**	⚠	VAUXHALL
106383	**VKDA 35503 T**	**VKDP 33500 T**	⚠	VAUXHALL
106427	**VKDA 35515 T**	**VKDP 33501 T**	⚠	VAUXHALL
106427	**VKDA 35515 T**	**VKDP 33500 T**	⚠	VAUXHALL
106427	**VKDA 35503 T**	**VKDP 33501 T**	⚠	VAUXHALL
106427	**VKDA 35503 T**	**VKDP 33500 T**	⚠	VAUXHALL
106433	**VKDA 35503 T**	**VKDP 33501 T**	⚠	VAUXHALL
106433	**VKDA 35503 T**	**VKDP 33500 T**	⚠	VAUXHALL
106433	**VKDA 35515 T**	**VKDP 33501 T**	⚠	VAUXHALL
106433	**VKDA 35515 T**	**VKDP 33500 T**	⚠	VAUXHALL
106435	**VKDA 35515 T**	**VKDP 33501 T**	⚠	VAUXHALL
106435	**VKDA 35503 T**	**VKDP 33501 T**	⚠	VAUXHALL
106438	**VKDA 35508 T**	**VKDP 34500 T**		VAUXHALL
106441	**VKDA 35508 T**			VAUXHALL
106442	**VKDA 35508 T**			VAUXHALL
106452	**VKDA 40304 T**		⚠	PEUGEOT
106452	**VKDA 35315 T**	**VKDP 33304 T**	⚠	PEUGEOT
106453	**VKDA 40304 T**		⚠	PEUGEOT
106453	**VKDA 35315 T**	**VKDP 33304 T**	⚠	PEUGEOT
106454	**VKDA 40304 T**		⚠	PEUGEOT

106454	**VKDA 35315 T**	**VKDP 33304 T**	⚠	PEUGEOT	106649	**VKDA 35122 T**		⚠	AUDI
106480	**VKDA 35309 T**	**VKDP 33306 T**	⚠	PEUGEOT	106649	***VKDA 40125 T***		⚠	AUDI
106480	**VKDA 35309 T**	**VKDP 33303 T**	⚠	PEUGEOT	106650	**VKDA 35122 T**		⚠	AUDI
106480	**VKDA 35309 T**	**VKDP 32301 T**	⚠	PEUGEOT	106650	***VKDA 40125 T***		⚠	AUDI
106480	**VKDA 35308 T**	**VKDP 33306 T**	⚠	PEUGEOT	106655	**VKDA 35122 T**		⚠	AUDI
106480	**VKDA 35308 T**	**VKDP 33303 T**	⚠	PEUGEOT	106655	***VKDA 40125 T***		⚠	AUDI
106480	**VKDA 35308 T**	**VKDP 32301 T**	⚠	PEUGEOT	106656	**VKDA 35122 T**		⚠	AUDI
106485	***VKDA 40128 T***		⚠	VW	106656	***VKDA 40125 T***		⚠	AUDI
106485		**VKDP 33111 T**	⚠	VW	106657	**VKDA 35122 T**		⚠	AUDI
106486	***VKDA 40128 T***		⚠	VW	106657	***VKDA 40125 T***		⚠	AUDI
106486		**VKDP 33111 T**	⚠	VW	106658	**VKDA 35122 T**		⚠	AUDI
106487	**VKDA 35110 T**		⚠	VW	106658	***VKDA 40125 T***		⚠	AUDI
106487	**VKDA 35116 T**		⚠	VW	106661	**VKDC 35814 T**			BMW
106487	**VKDA 35118 T**		⚠	VW	106690	**VKDA 35122 T**		⚠	SEAT
106487	**VKDA 40109 T**		⚠	VW	106690	***VKDA 40124 T***		⚠	SEAT
106488	**VKDA 35118 T**			AUDI	106691	**VKDA 35122 T**		⚠	SEAT
106489	**VKDA 35118 T**			AUDI	106691	***VKDA 40124 T***		⚠	SEAT
106497	**VKDA 40109 T**		⚠	VW	106692	**VKDA 35122 T**		⚠	SEAT
106497	**VKDA 35118 T**	**VKDP 33111 T**	⚠	VW	106692	***VKDA 40124 T***		⚠	SEAT
106497		**VKDP 33111 T**	⚠	VW	106693	**VKDA 35122 T**		⚠	SEAT
106498	**VKDA 40109 T**		⚠	VW	106693	***VKDA 40124 T***		⚠	SEAT
106498	**VKDA 35116 T**	**VKDP 33111 T**	⚠	VW	106697	**VKDA 35122 T**		⚠	SKODA
106498	**VKDA 35118 T**	**VKDP 33111 T**	⚠	VW	106697	***VKDA 40126 T***		⚠	SKODA
106499		**VKDP 33111 T**		VW	106698	**VKDA 35122 T**		⚠	SKODA
106507	***VKDA 40128 T***			SKODA	106698	***VKDA 40126 T***		⚠	SKODA
106516	***VKDA 40129 T***		⚠	AUDI	106699	**VKDA 35122 T**		⚠	SKODA
106516	***VKDA 35123 T***	**VKDP 33111 T**	⚠	AUDI	106699	***VKDA 40126 T***		⚠	SKODA
106538	***VKD 35035 T***			MAZDA	106700	**VKDA 35122 T**		⚠	SKODA
106549	**VKDC 35814 T**			BMW	106700	***VKDA 40126 T***		⚠	SKODA
106554	**VKDA 35308 T**	**VKDP 33306 T**		PEUGEOT	106712	**VKDA 35230 T**	**VKDP 33207 T**		ALFA ROMEO
106569	**VKDA 35115 T**		⚠	SEAT	106721	**VKDC 35821 T**	***VKDP 33803 T***	⚠	MINI
106569	**VKDA 40101 T**		⚠	SEAT	106721	***VKDA 40815 T***	***VKDP 43800 T***	⚠	MINI
106570	**VKDA 35115 T**		⚠	SEAT	106748	**VKDA 35110 T**		⚠	SEAT
106570	**VKDA 40101 T**		⚠	SEAT	106748	**VKDA 35115 T**		⚠	SEAT
106593	**VKDC 35821 T**	***VKDP 33803 T***	⚠	MINI	106748	**VKDA 40101 T**		⚠	SEAT
106593	***VKDA 40815 T***	***VKDP 43800 T***	⚠	MINI	106749	**VKDA 35110 T**		⚠	SEAT
106600	**VKDA 35625 T**	**VKDP 31603 T**		RENAULT	106749	**VKDA 35115 T**		⚠	SEAT
106603	**VKDA 35625 T**	**VKDP 31603 T**		RENAULT	106749	**VKDA 40101 T**		⚠	SEAT
106606	**VKDC 35814 T**	**VKDP 33800 T**	⚠	BMW	106757	**VKDC 35814 T**			BMW
106606	**VKDA 40805 T**		⚠	BMW	106758	**VKDC 35814 T**			BMW
106609	**VKDC 35814 T**	**VKDP 33800 T**	⚠	BMW	106770	**VKDC 35814 T**		⚠	BMW
106609	**VKDA 40805 T**		⚠	BMW	106770	**VKDC 35815 T**		⚠	BMW
106612	**VKDC 35814 T**			BMW	106776	**VKDA 35230 T**	**VKDP 33207 T**		ALFA ROMEO
106615	**VKDC 35814 T**	**VKDP 33800 T**	⚠	BMW	106777	**VKDA 40415 T**			FORD
106615	**VKDA 40805 T**		⚠	BMW	106780	**VKDA 40415 T**			FORD
106618	**VKDA 40805 T**		⚠	BMW	106792	**VKDA 35122 T**		⚠	SKODA
106618	**VKDC 35814 T**		⚠	BMW	106792	***VKDA 40126 T***		⚠	SKODA
106623	**VKDC 35814 T**			BMW	106793	**VKDA 35122 T**		⚠	SKODA
106634	**VKDA 35122 T**		⚠	SKODA	106793	***VKDA 40126 T***		⚠	SKODA
106634	***VKDA 40126 T***		⚠	SKODA	106794	**VKDA 35122 T**		⚠	SKODA
106635	**VKDA 35122 T**		⚠	SKODA	106794	***VKDA 40126 T***		⚠	SKODA
106635	***VKDA 40126 T***		⚠	SKODA	106795	**VKDA 35122 T**		⚠	SKODA
106636	**VKDA 35122 T**		⚠	SKODA	106795	***VKDA 40126 T***		⚠	SKODA
106636	***VKDA 40126 T***		⚠	SKODA	106809	**VKDA 35110 T**	**VKDP 33107 T**	⚠	VW
106637	**VKDA 35122 T**		⚠	SKODA	106809	**VKDC 35101 T**	**VKDP 33107 T**	⚠	VW
106637	***VKDA 40126 T***		⚠	SKODA	106809	**VKDC 35102 T**	**VKDP 33107 T**	⚠	VW
106638	**VKDA 35122 T**		⚠	SEAT	106809	**VKDA 40101 T**	**VKDP 43100 T**	⚠	VW
106638	***VKDA 40124 T***		⚠	SEAT	106826	***VKDA 35123 T***		⚠	AUDI
106639	**VKDA 35122 T**		⚠	SEAT	106826	***VKDA 40129 T***		⚠	AUDI
106639	***VKDA 40124 T***		⚠	SEAT	106828	***VKDA 35123 T***		⚠	AUDI
106640	**VKDA 35122 T**		⚠	SEAT	106828	***VKDA 40129 T***		⚠	AUDI
106640	***VKDA 40124 T***		⚠	SEAT	106829	***VKDA 35123 T***		⚠	AUDI
106641	**VKDA 35122 T**		⚠	SEAT	106829	***VKDA 40129 T***		⚠	AUDI
106641	***VKDA 40124 T***		⚠	SEAT	106830	***VKDA 35123 T***		⚠	AUDI
106647	**VKDA 35122 T**		⚠	AUDI	106830	***VKDA 40129 T***		⚠	AUDI
106647	***VKDA 40125 T***		⚠	AUDI	106839	**VKDA 35308 T**	**VKDP 33306 T**		PEUGEOT
106648	**VKDA 35122 T**		⚠	AUDI	106840	**VKDA 35230 T**	**VKDP 33207 T**		ALFA ROMEO
106648	***VKDA 40125 T***		⚠	AUDI	106841	**VKDA 35230 T**	**VKDP 33207 T**		ALFA ROMEO

BILSTEIN .../...

106842	**VKDA 40204 T**		⚠	ALFA ROMEO
106842	**VKDA 35230 T**	**VKDP 33207 T**	⚠	ALFA ROMEO
106878	**VKDA 35315 T**	**VKDP 33304 T**		CITROËN
106879	**VKDA 35315 T**	**VKDP 33304 T**		CITROËN
106880	**VKDA 35315 T**	**VKDP 33304 T**		CITROËN
106881	**VKDA 35315 T**	**VKDP 33304 T**		CITROËN
106890	**VKDA 40805 T**		⚠	BMW
106890	**VKDC 35802 T**		⚠	BMW
106893	**VKDA 35110 T**	**VKDP 33107 T**	⚠	VW
106893	**VKDC 35101 T**	**VKDP 33107 T**	⚠	VW
106893	**VKDA 40101 T**	**VKDP 43100 T**	⚠	VW
106897	**VKDA 35122 T**		⚠	SKODA
106897	***VKDA 40126 T***		⚠	SKODA
106898	**VKDA 35122 T**		⚠	SKODA
106898	***VKDA 40126 T***		⚠	SKODA
106899	**VKDA 35122 T**		⚠	SKODA
106899	***VKDA 40126 T***		⚠	SKODA
106900	**VKDA 35122 T**		⚠	SKODA
106900	***VKDA 40126 T***		⚠	SKODA
106903	**VKDA 40805 T**		⚠	BMW
106903	**VKDC 35814 T**	**VKDP 33800 T**	⚠	BMW
106904	**VKDA 35122 T**		⚠	VW
106904	***VKDA 40124 T***		⚠	VW
106904	***VKDA 40125 T***		⚠	VW
106910	***VKDA 35123 T***	**VKDP 33111 T**		AUDI
106911	***VKDA 35123 T***	**VKDP 33111 T**		AUDI
106912	***VKDA 35123 T***	**VKDP 33111 T**		AUDI
106913	***VKDA 35123 T***	**VKDP 33111 T**		AUDI
106916	***VKDA 35123 T***			AUDI
106917	***VKDA 35123 T***			AUDI
106918	***VKDA 35123 T***			AUDI
106919	***VKDA 35123 T***			AUDI
106922	**VKDC 35814 T**			BMW
106923	**VKDC 35814 T**			BMW
106924	**VKDC 35814 T**			BMW
106925	**VKDA 35118 T**	**VKDP 33111 T**		AUDI
106926	**VKDA 35118 T**	**VKDP 33111 T**		AUDI
106931	**VKDA 35811 T**			MERCEDES BENZ
106938		**VKDP 33802 T**		MERCEDES BENZ
106942	**VKDC 35814 T**		⚠	BMW
106942	**VKDC 35815 T**		⚠	BMW
106943	**VKDC 35814 T**			BMW
106946	**VKDC 35814 T**		⚠	BMW
106946	**VKDC 35815 T**		⚠	BMW
106947	**VKDC 35814 T**			BMW
106948	**VKDC 35814 T**			BMW
106959	**VKDC 35814 T**			BMW
106979	**VKDA 35122 T**			VW
106980	**VKDA 35122 T**			VW
106983	**VKDC 35814 T**			BMW
106992	**VKDC 35814 T**			BMW
106997	**VKDA 35230 T**	**VKDP 33207 T**		ALFA ROMEO
107027	**VKDA 40415 T**			FORD
107028	**VKDA 40415 T**			FORD
107029	***VKD 35035 T***			MAZDA
107030	***VKD 35035 T***			MAZDA
107031	***VKD 35035 T***			VOLVO
107032	***VKD 35035 T***			VOLVO
107033	***VKD 35035 T***			VOLVO
107034	***VKD 35035 T***			VOLVO
107035	**VKDA 35122 T**		⚠	VW
107035	***VKDA 40124 T***		⚠	VW
107036	**VKDA 35122 T**		⚠	VW
107036	***VKDA 40124 T***		⚠	VW
107041	**VKDA 35122 T**		⚠	VW
107041	***VKDA 40124 T***		⚠	VW
107042	**VKDA 35122 T**		⚠	VW
107042	***VKDA 40124 T***		⚠	VW
107043	**VKDA 35122 T**		⚠	VW
107043	***VKDA 40124 T***		⚠	VW
107044	**VKDA 35122 T**		⚠	VW
107044	***VKDA 40124 T***		⚠	VW
107045	**VKDA 35122 T**		⚠	VW
107045	***VKDA 40124 T***		⚠	VW
107046	**VKDA 35122 T**		⚠	VW
107046	***VKDA 40124 T***		⚠	VW
107057	**VKDA 35122 T**		⚠	VW
107057	***VKDA 40125 T***		⚠	VW
107058	**VKDA 35122 T**		⚠	VW
107058	***VKDA 40125 T***		⚠	VW
107069	**VKDA 35122 T**			VW
107070	**VKDA 35122 T**			VW
107071	**VKDA 35122 T**			VW
107072	**VKDA 35122 T**			VW
107073	**VKDC 35821 T**	***VKDP 33803 T***	⚠	MINI
107073	***VKDA 40815 T***	***VKDP 43800 T***	⚠	MINI
107074	**VKDA 35113 T**	**VKDP 33101 T**	⚠	VW
107074	***VKDA 40123 T***	**VKDP 43106 T**	⚠	VW
107075	**VKDA 35113 T**	**VKDP 33101 T**	⚠	VW
107075	***VKDA 40123 T***	**VKDP 43106 T**	⚠	VW
107076	**VKDA 35113 T**	**VKDP 33101 T**	⚠	VW
107076	***VKDA 40123 T***	**VKDP 43106 T**	⚠	VW
107077	**VKDA 35113 T**	**VKDP 33101 T**	⚠	VW
107077	***VKDA 40123 T***	**VKDP 43106 T**	⚠	VW
107096	**VKDC 35814 T**			BMW
107097	**VKDC 35814 T**			BMW
107098	**VKDC 35814 T**			BMW

BOGE

26-046-A	**VKDA 40101 T**			VW
27-008-F	**VKDA 40805 T**			BMW
27-008-P	**VKDA 40805 T**			BMW
27-020-A	**VKDA 40805 T**			BMW
27-043-F		**VKDP 43101 T**		BMW
27-044-0	**VKDA 35303 T**	**VKDP 33300 T**		CITROËN / PEUGEOT / TALBOT
27-079-0	**VKDC 35801 T**	**VKDP 33800 T**		BMW
27-079-F	**VKDC 35801 T**	**VKDP 33800 T**		BMW
27-093-2		**VKDP 43101 T**		AUDI
27-093-F		**VKDP 43101 T**		AUDI
27-093-P		**VKDP 43101 T**		AUDI
27-094-0	**VKD 35001 T**			PEUGEOT / TALBOT
27-095-1		**VKDP 43101 T**		AUDI
27-117-P	**VKDA 40218 T**		⚠	FIAT
27-117-P	**VKDA 40219 T**		⚠	FIAT
27-137-1	**VKDA 35403 T**	**VKDP 31400 T**	⚠	FORD
27-137-1	**VKDA 35409 T**	**VKDP 31400 T**	⚠	FORD
27-144-P	**VKDA 40805 T**			BMW
27-145-A	**VKDA 35200 T**	**VKDP 33202 T**	⚠	FIAT
27-145-A	**VKDA 35200 T**	**VKDP 33300 T**	⚠	FIAT
27-145-A	**VKDC 35204 T**	**VKDP 33202 T**	⚠	FIAT
27-145-A	**VKDC 35204 T**	**VKDP 33300 T**	⚠	FIAT
27-145-P	**VKDA 35200 T**	**VKDP 33300 T**	⚠	FIAT
27-145-P	**VKDA 35200 T**	**VKDP 33202 T**	⚠	FIAT
27-145-P	**VKDC 35204 T**	**VKDP 33300 T**	⚠	FIAT
27-145-P	**VKDC 35204 T**	**VKDP 33202 T**	⚠	FIAT
27-148-0	**VKD 35001 T**			PEUGEOT
27-161-B	**VKDA 40805 T**			BMW
27-168-0	**VKDA 40805 T**			BMW

27-169-2	**VKDA 37202 T**	**VKDP 31400 T**		FIAT
27-173-1	**VKDC 35207 T**			LANCIA
27-173-F	**VKDC 35207 T**			LANCIA
27-215-0	**VKDA 40101 T**	**VKDP 43100 T**		SEAT / VW
27-215-1	**VKDA 40101 T**	**VKDP 43100 T**		SEAT / VW
27-229-0	**VKDC 35105 T**	**VKDP 33100 T**		VW
27-229-1	**VKDC 35105 T**	**VKDP 33100 T**		VW
27-229-F	**VKDC 35105 T**	**VKDP 33100 T**		VW
27-231-F	**VKDA 37201 T**	**VKDP 31400 T**	⚠	FIAT
27-231-F	**VKDA 37204 T**	**VKDP 31400 T**	⚠	FIAT
27-260-F	**VKDA 40805 T**			BMW
27-265-0	**VKD 35001 T**	**VKDP 32600 T**		RENAULT
27-265-F	**VKD 35001 T**	**VKDP 32600 T**		RENAULT
27-295-B	**VKDA 40805 T**			BMW
27-295-P	**VKDA 40805 T**			BMW
27-304-F	**VKDA 40805 T**			BMW
27-310-F		**VKDP 43100 T**		VW
27-311-0		**VKDP 43100 T**		VW
27-332-0	**VKDA 40101 T**	**VKDP 43100 T**		VW
27-336-F	**VKDA 40805 T**			BMW
27-412-0	**VKDC 35103 T**	**VKDP 32103 T**	⚠	AUDI / VW
27-412-0	**VKDC 35103 T**	**VKDP 33102 T**	⚠	AUDI / VW
27-412-F	**VKDC 35103 T**	**VKDP 32103 T**	⚠	AUDI / VW
27-412-F	**VKDC 35103 T**	**VKDP 33102 T**	⚠	AUDI / VW
27-415-F	**VKDA 40101 T**	**VKDP 43100 T**		SEAT / VW
27-415-P	**VKDA 40101 T**	**VKDP 43100 T**		SEAT / VW
27-446-F	**VKDA 40121 T**	**VKDP 43104 T**	⚠	AUDI
27-446-F	**VKDA 40121 T**	**VKDP 43102 T**	⚠	AUDI
27-446-F	**VKDA 40122 T**	**VKDP 43104 T**	⚠	AUDI
27-446-F	**VKDA 40122 T**	**VKDP 43102 T**	⚠	AUDI
27-446-P	**VKDA 40121 T**	**VKDP 43102 T**	⚠	AUDI
27-446-P	**VKDA 40121 T**	**VKDP 43104 T**	⚠	AUDI
27-446-P	**VKDA 40122 T**	**VKDP 43102 T**	⚠	AUDI
27-446-P	**VKDA 40122 T**	**VKDP 43104 T**	⚠	AUDI
27-465-F	**VKDA 40121 T**		⚠	AUDI
27-465-F	**VKDA 40122 T**		⚠	AUDI
27-465-P	**VKDA 40121 T**		⚠	AUDI
27-465-P	**VKDA 40122 T**		⚠	AUDI
27-467-0	**VKDC 35102 T**	**VKDP 33100 T**		VW
27-467-F	**VKDC 35102 T**	**VKDP 33100 T**		VW
27-528-F	**VKDA 40101 T**	**VKDP 43100 T**	⚠	VW
27-528-F	**VKDA 40101 T**	**VKDP 43102 T**	⚠	VW
27-542-D	**VKDA 37202 T**	**VKDP 31400 T**		FIAT
27-542-P	**VKDA 37202 T**	**VKDP 31400 T**		FIAT
27-553-0	**VKDA 35403 T**	**VKDP 31400 T**	⚠	FORD
27-553-0	**VKDA 35409 T**	**VKDP 31400 T**	⚠	FORD
27-553-F	**VKDA 35403 T**	**VKDP 31400 T**	⚠	FORD
27-553-F	**VKDA 35409 T**	**VKDP 31400 T**	⚠	FORD
27-565-2	**VKDC 35207 T**			LANCIA
27-565-F	**VKDC 35207 T**			LANCIA
27-617-0	**VKDA 35403 T**	**VKDP 31400 T**	⚠	FORD
27-617-0	**VKDA 35409 T**	**VKDP 31400 T**	⚠	FORD
27-617-F	**VKDA 35403 T**	**VKDP 31400 T**	⚠	FORD
27-617-F	**VKDA 35409 T**	**VKDP 31400 T**	⚠	FORD
27-621-0	**VKDA 35403 T**	**VKDP 31400 T**	⚠	FORD
27-621-0	**VKDA 35409 T**	**VKDP 31400 T**	⚠	FORD
27-625-0	**VKDA 35702 T**	**VKDP 32103 T**	⚠	SEAT
27-625-0	**VKDA 37201 T**	**VKDP 32103 T**	⚠	SEAT
27-625-F	**VKDA 35702 T**	**VKDP 32103 T**	⚠	SEAT
27-625-F	**VKDA 37201 T**	**VKDP 32103 T**	⚠	SEAT
27-679-0		**VKDP 31400 T**		FORD
27-683-0	**VKDA 35500 T**	**VKDP 33500 T**		OPEL / VAUXHALL
27-683-F	**VKDA 35500 T**	**VKDP 33500 T**		OPEL / VAUXHALL
27-746-F	**VKDC 81105 T**			TOYOTA
27-770-4	**VKDC 35820 T**	**VKDP 33800 T**		BMW
27-770-F	**VKDC 35820 T**	**VKDP 33800 T**		BMW
27-785-0	**VKDA 40101 T**			VW
27-799-6		**VKDP 43101 T**		BMW
27-810-0	**VKDA 40113 T**	**VKDP 43101 T**		AUDI
27-810-F	**VKDA 40113 T**	**VKDP 43101 T**		AUDI
27-810-P	**VKDA 40113 T**	**VKDP 43101 T**		AUDI
27-811-F	**VKDA 40113 T**	**VKDP 43101 T**		AUDI
27-832-0		**VKDP 43101 T**		VW
27-833-F		**VKDP 43101 T**		VW
27-833-P		**VKDP 43101 T**		VW
27-849-0	**VKDA 40102 T**	**VKDP 43102 T**		AUDI / VW
27-849-F	**VKDA 40102 T**	**VKDP 43102 T**		AUDI / VW
27-870-0	**VKDA 35702 T**	**VKDP 32103 T**	⚠	SEAT
27-870-0	**VKDA 37201 T**	**VKDP 32103 T**	⚠	SEAT
27-880-F		**VKDP 43101 T**		AUDI
27-882-0		**VKDP 43102 T**		VW
27-899-0		**VKDP 43100 T**		SKODA
27-899-F		**VKDP 43100 T**		SKODA
27-935-0	**VKDA 37201 T**	**VKDP 31400 T**	⚠	FIAT / SEAT
27-935-0	**VKDA 37204 T**	**VKDP 31400 T**	⚠	FIAT / SEAT
27-961-6	**VKDA 35702 T**	**VKDP 33800 T**	⚠	FIAT / SEAT
27-961-6	**VKDA 37201 T**	**VKDP 33800 T**	⚠	FIAT / SEAT
27-961-F	**VKDA 35702 T**	**VKDP 33800 T**	⚠	FIAT / SEAT
27-961-F	**VKDA 37201 T**	**VKDP 33800 T**	⚠	FIAT / SEAT
27-974-F	**VKDA 40805 T**			BMW
27-981-0	**VKDA 35602 T**	VKDP 31606 T		RENAULT
27-981-F	**VKDA 35602 T**	VKDP 31606 T		RENAULT
27-982-1		**VKDP 43102 T**		VW
27-982-F		**VKDP 43102 T**		VW
27-982-P		**VKDP 43102 T**		VW
27-A08-0		**VKDP 93201 T**		NISSAN
27-A08-A		**VKDP 93201 T**		NISSAN
27-A12-0		**VKDP 83201 T**		NISSAN
27-A13-0		**VKDP 83201 T**		NISSAN
27-A24-0	**VKDA 88202 T**			NISSAN
27-A24-A	**VKDA 88202 T**			NISSAN
27-A25-0	**VKDA 88202 T**			NISSAN
27-A25-A	**VKDA 88202 T**			NISSAN
27-A28-0	**VKDA 35403 T**	**VKDP 31400 T**	⚠	FORD
27-A28-0	**VKDA 35403 T**	**VKDP 33401 T**	⚠	FORD
27-A28-0	**VKDA 35407 T**	**VKDP 31400 T**	⚠	FORD
27-A28-0	**VKDA 35407 T**	**VKDP 33401 T**	⚠	FORD
27-A28-A	**VKDA 35403 T**	**VKDP 31400 T**	⚠	FORD
27-A28-A	**VKDA 35403 T**	**VKDP 33401 T**	⚠	FORD
27-A28-A	**VKDA 35407 T**	**VKDP 31400 T**	⚠	FORD
27-A28-A	**VKDA 35407 T**	**VKDP 33401 T**	⚠	FORD
27-A29-0	**VKDA 40407 T**			FORD
27-A29-A	**VKDA 40407 T**			FORD
27-A29-P	**VKDA 40407 T**			FORD
27-A30-0	**VKDA 35602 T**	VKDP 31606 T		RENAULT
27-A30-F	**VKDA 35602 T**	VKDP 31606 T		RENAULT
27-A33-A	**VKDC 81104 T**			TOYOTA
27-A41-0	**VKD 35012 T**			AUSTIN / ROVER
27-A42-0		**VKDP 43700 T**		AUSTIN
27-A43-0		**VKDP 43700 T**		AUSTIN
27-A48-0	**VKDA 35112 T**	**VKDP 33203 T**		SKODA
27-A48-F	**VKDA 35112 T**	**VKDP 33203 T**		SKODA
27-A50-0	VKDA 37200 T	**VKDP 31400 T**		LANCIA
27-A50-A	VKDA 37200 T	**VKDP 31400 T**		LANCIA
27-A51-0	VKDA 37200 T	**VKDP 31400 T**		LANCIA
27-A51-A	VKDA 37200 T	**VKDP 31400 T**		LANCIA
27-A52-0	**VKDA 35403 T**	**VKDP 31400 T**	⚠	FORD
27-A52-0	**VKDA 35406 T**	**VKDP 31400 T**	⚠	FORD
27-A52-0	**VKDA 35407 T**	**VKDP 31400 T**	⚠	FORD
27-A52-A	**VKDA 35403 T**	**VKDP 31400 T**	⚠	FORD
27-A52-A	**VKDA 35406 T**	**VKDP 31400 T**	⚠	FORD
27-A52-A	**VKDA 35407 T**	**VKDP 31400 T**	⚠	FORD
27-A53-0	**VKDA 40407 T**			FORD
27-A53-A	**VKDA 40407 T**			FORD
27-A54-0	**VKDA 35600 T**	**VKDP 31601 T**	⚠	RENAULT
27-A54-0	**VKDA 35601 T**	**VKDP 31601 T**	⚠	RENAULT

BOGE .../...

27-A54-F	**VKDA 35600 T**	**VKDP 31601 T**	⚠	RENAULT
27-A54-F	**VKDA 35601 T**	**VKDP 31601 T**	⚠	RENAULT
27-A55-0	**VKDA 35600 T**	**VKDP 31601 T**	⚠	RENAULT
27-A55-0	**VKDA 35601 T**	**VKDP 31601 T**	⚠	RENAULT
27-A55-F	**VKDA 35600 T**	**VKDP 31601 T**	⚠	RENAULT
27-A55-F	**VKDA 35601 T**	**VKDP 31601 T**	⚠	RENAULT
27-A56-F	**VKDA 35601 T**	**VKDP 31601 T**		RENAULT
27-A57-0	**VKDA 35702 T**	**VKDP 33800 T**	⚠	SEAT
27-A57-0	**VKDA 37201 T**	**VKDP 33800 T**	⚠	SEAT
27-A57-F	**VKDA 35702 T**	**VKDP 33800 T**	⚠	SEAT
27-A57-F	**VKDA 37201 T**	**VKDP 33800 T**	⚠	SEAT
27-A58-0	**VKDA 35110 T**	**VKDP 33100 T**	⚠	SEAT / VW
27-A58-0	**VKDA 35110 T**	**VKDP 33108 T**	⚠	SEAT / VW
27-A58-0	**VKDA 35110 T**	**VKDP 33107 T**	⚠	SEAT / VW
27-A58-0	**VKDC 35101 T**	**VKDP 33100 T**	⚠	SEAT / VW
27-A58-0	**VKDC 35101 T**	**VKDP 33108 T**	⚠	SEAT / VW
27-A58-0	**VKDC 35101 T**	**VKDP 33107 T**	⚠	SEAT / VW
27-A58-0	**VKDC 35102 T**	**VKDP 33100 T**	⚠	SEAT / VW
27-A58-0	**VKDC 35102 T**	**VKDP 33108 T**	⚠	SEAT / VW
27-A58-0	**VKDC 35102 T**	**VKDP 33107 T**	⚠	SEAT / VW
27-A58-F	**VKDA 35110 T**	**VKDP 33100 T**	⚠	SEAT / VW
27-A58-F	**VKDA 35110 T**	**VKDP 33107 T**	⚠	SEAT / VW
27-A58-F	**VKDA 35110 T**	**VKDP 33108 T**	⚠	SEAT / VW
27-A58-F	**VKDC 35101 T**	**VKDP 33100 T**	⚠	SEAT / VW
27-A58-F	**VKDC 35101 T**	**VKDP 33107 T**	⚠	SEAT / VW
27-A58-F	**VKDC 35101 T**	**VKDP 33108 T**	⚠	SEAT / VW
27-A58-F	**VKDC 35102 T**	**VKDP 33100 T**	⚠	SEAT / VW
27-A58-F	**VKDC 35102 T**	**VKDP 33107 T**	⚠	SEAT / VW
27-A58-F	**VKDC 35102 T**	**VKDP 33108 T**	⚠	SEAT / VW
27-A59-A	**VKDA 40407 T**			FORD
27-A61-0	**VKDA 35702 T**	**VKDP 32103 T**	⚠	SEAT
27-A61-0	**VKDA 37201 T**	**VKDP 32103 T**	⚠	SEAT
27-A61-F	**VKDA 35702 T**	**VKDP 32103 T**	⚠	SEAT
27-A61-F	**VKDA 37201 T**	**VKDP 32103 T**	⚠	SEAT
27-A63-A	**VKDA 35600 T**	**VKDP 31600 T**		RENAULT
27-A92-0	**VKDA 88205 T**			NISSAN
27-A92-A	**VKDA 88205 T**			NISSAN
27-B02-F	**VKDA 35403 T**	**VKDP 31400 T**	⚠	FORD
27-B02-F	**VKDA 35409 T**	**VKDP 31400 T**	⚠	FORD
27-B07-A	**VKDA 40101 T**	**VKDP 43103 T**		VW
27-B07-F	**VKDA 40101 T**	**VKDP 43103 T**		VW
27-B10-0	**VKDC 35203 T**	**VKDP 31200 T**		FIAT
27-B10-F	**VKDC 35203 T**	**VKDP 31200 T**		FIAT
27-B11-A	**VKDA 40407 T**			FORD
27-B16-0	**VKD 35012 T**			AUSTIN / ROVER
27-B21-0	**VKDA 40101 T**	**VKDP 43105 T**		SEAT / VW
27-B21-F	**VKDA 40101 T**	**VKDP 43105 T**		SEAT / VW
27-B22-F	**VKDA 40101 T**			SEAT
27-B23-0	**VKDA 35403 T**	**VKDP 31400 T**	⚠	FORD
27-B23-0	**VKDA 35403 T**	**VKDP 33401 T**	⚠	FORD
27-B23-0	**VKDA 35407 T**	**VKDP 31400 T**	⚠	FORD
27-B23-0	**VKDA 35407 T**	**VKDP 33401 T**	⚠	FORD
27-B23-F	**VKDA 35403 T**	**VKDP 31400 T**	⚠	FORD
27-B23-F	**VKDA 35403 T**	**VKDP 33401 T**	⚠	FORD
27-B23-F	**VKDA 35407 T**	**VKDP 31400 T**	⚠	FORD
27-B23-F	**VKDA 35407 T**	**VKDP 33401 T**	⚠	FORD
27-B24-0	**VKDA 35403 T**	**VKDP 31400 T**	⚠	FORD
27-B24-0	**VKDA 35406 T**	**VKDP 31400 T**	⚠	FORD
27-B24-0	**VKDA 35407 T**	**VKDP 31400 T**	⚠	FORD
27-B24-F	**VKDA 35403 T**	**VKDP 31400 T**	⚠	FORD
27-B24-F	**VKDA 35406 T**	**VKDP 31400 T**	⚠	FORD
27-B24-F	**VKDA 35407 T**	**VKDP 31400 T**	⚠	FORD
27-B42-A	**VKDA 40610 T**		⚠	VOLVO
27-B42-A	***VKDA 40611 T***		⚠	VOLVO
27-B48-0	**VKDA 35112 T**	**VKDP 33110 T**		SKODA
27-B48-F	**VKDA 35112 T**	**VKDP 33110 T**		SKODA
27-B56-F	**VKDA 40805 T**			BMW
27-B57-F	**VKDA 40805 T**			BMW
27-B75-0	**VKDA 35405 T**	**VKDP 33401 T**		FORD
27-B75-F	**VKDA 35405 T**	**VKDP 33401 T**		FORD
27-B76-0	**VKDA 35405 T**	**VKDP 33401 T**		FORD
27-B76-F	**VKDA 35405 T**	**VKDP 33401 T**		FORD
27-B77-0	**VKDA 35405 T**	**VKDP 33401 T**		FORD
27-B77-F	**VKDA 35405 T**	**VKDP 33401 T**		FORD
27-B78-0	**VKDA 35405 T**			FORD
27-B78-F	**VKDA 35405 T**			FORD
27-B79-0	**VKDA 40407 T**	**VKDP 43400 T**		FORD
27-B79-F	**VKDA 40407 T**	**VKDP 43400 T**		FORD
27-B81-0	**VKDA 40407 T**	**VKDP 43400 T**		FORD
27-B81-F	**VKDA 40407 T**	**VKDP 43400 T**		FORD
27-B84-0		**VKDP 43400 T**		FORD
27-B84-F		**VKDP 43400 T**		FORD
27-B87-0	**VKDA 40407 T**			FORD
27-C04-F	**VKDA 40101 T**	**VKDP 43105 T**		SEAT / VW
27-C06-F	**VKDA 40104 T**	**VKDP 43106 T**		SEAT / SKODA / VW
27-C06-P	**VKDA 40104 T**	**VKDP 43106 T**		SEAT / SKODA / VW
27-C08-F	**VKDA 40104 T**	**VKDP 43106 T**		SEAT / SKODA / VW
27-C09-F	**VKDA 40104 T**	**VKDP 43106 T**		SKODA / VW
27-C11-F	**VKDA 40110 T**			AUDI / SKODA / VW
27-C11-P	**VKDA 40110 T**			AUDI / SKODA / VW
27-C12-F	**VKDA 40110 T**			AUDI / VW
27-C14-F	**VKDA 40104 T**	**VKDP 43106 T**		AUDI
27-C14-P	**VKDA 40104 T**	**VKDP 43106 T**		AUDI
27-C15-F	**VKDA 40104 T**	**VKDP 43106 T**		AUDI
27-C16-A	**VKDC 35204 T**	**VKDP 33300 T**		FIAT
27-C16-F	**VKDC 35204 T**	**VKDP 33300 T**		FIAT
27-C18-A	**VKDC 35203 T**			LANCIA
27-C19-0	**VKDA 35112 T**	**VKDP 33110 T**		SKODA
27-C19-F	**VKDA 35112 T**	**VKDP 33110 T**		SKODA
27-C26-A	**VKDC 81503 T**			HYUNDAI
27-C38-A	**VKDA 40600 T**	**VKDP 41600 T**		RENAULT
27-C40-A	**VKDA 37201 T**	**VKDP 33800 T**		FIAT
27-C41-A	**VKDA 40805 T**			BMW
27-C41-F	**VKDA 40805 T**			BMW
27-C42-A	**VKDA 40805 T**			BMW
27-C43-F	**VKDA 40805 T**			BMW
27-C53-A	**VKDA 88401 T**			MAZDA
27-C54-A	**VKDA 88401 T**			MAZDA
27-C55-A	**VKDA 88401 T**			KIA / MAZDA
27-C56-A	**VKDA 88401 T**			KIA / MAZDA
27-C67-A	**VKDA 35230 T**			ALFA ROMEO
27-D28-A	**VKDC 81112 T**	**VKDP 83106 T**		TOYOTA
27-D29-A	**VKDC 81112 T**	**VKDP 83106 T**		TOYOTA
27-D31-A		**VKDP 83201 T**		TOYOTA
27-D69-A	**VKDA 40121 T**	**VKDP 43102 T**	⚠	AUDI
27-D69-A	**VKDA 40121 T**	**VKDP 43104 T**	⚠	AUDI
27-D69-A	**VKDA 40122 T**	**VKDP 43102 T**	⚠	AUDI
27-D69-A	**VKDA 40122 T**	**VKDP 43104 T**	⚠	AUDI
27-D69-F	**VKDA 40121 T**	**VKDP 43102 T**	⚠	AUDI
27-D69-F	**VKDA 40121 T**	**VKDP 43104 T**	⚠	AUDI
27-D69-F	**VKDA 40122 T**	**VKDP 43102 T**	⚠	AUDI
27-D69-F	**VKDA 40122 T**	**VKDP 43104 T**	⚠	AUDI
27-D70-A	**VKDA 40121 T**		⚠	AUDI
27-D70-A	**VKDA 40122 T**		⚠	AUDI
27-D70-F	**VKDA 40121 T**		⚠	AUDI
27-D70-F	**VKDA 40122 T**		⚠	AUDI
27-D72-A	**VKDA 40404 T**	**VKDP 44400 T**		FORD
27-D72-F	**VKDA 40404 T**	**VKDP 44400 T**		FORD

27-D74-F	**VKDA 40401 T**	**VKDP 43400 T**		FORD	30-A97-A	**VKDA 35309 T**	**VKDP 33306 T**	⚠	PEUGEOT
27-D85-A		**VKDP 44400 T**		FORD	30-A97-A	**VKDA 35309 T**	**VKDP 32301 T**	⚠	PEUGEOT
27-D85-F		**VKDP 44400 T**		FORD	30-A97-A	**VKDA 35309 T**	**VKDP 33303 T**	⚠	PEUGEOT
27-D97-A	**VKDA 40104 T**			VW	30-A98-A	**VKDA 35308 T**	**VKDP 32301 T**	⚠	PEUGEOT
27-D98-A	**VKDA 40104 T**			SKODA / VW	30-A98-A	**VKDA 35308 T**	**VKDP 33303 T**	⚠	PEUGEOT
27-E24-A		**VKDP 43105 T**		MAZDA	30-A98-A	**VKDA 35308 T**	**VKDP 33306 T**	⚠	PEUGEOT
27-E54-0		**VKDP 33500 T**		DAEWOO	30-A98-A	**VKDA 35309 T**	**VKDP 32301 T**	⚠	PEUGEOT
27-E55-0		**VKDP 33500 T**		DAEWOO	30-A98-A	**VKDA 35309 T**	**VKDP 33303 T**	⚠	PEUGEOT
27-E66-A	**VKDA 35600 T**	**VKDP 31600 T**		RENAULT	30-A98-A	**VKDA 35309 T**	**VKDP 33306 T**	⚠	PEUGEOT
27-E67-A	**VKDA 35600 T**	**VKDP 31600 T**		RENAULT	30-B09-A		**VKDP 33107 T**		MAZDA
27-F02-A	**VKDA 40110 T**			AUDI / SKODA / VW	30-B10-A		**VKDP 33107 T**		MAZDA
					30-B57-A	**VKDA 88203 T**			NISSAN
27-F15-A	**VKDC 35821 T**			MINI	30-B58-A	**VKDA 88203 T**			NISSAN
27-F16-A	**VKDC 35821 T**			MINI	30-B67-A	**VKDC 81103 T**			TOYOTA
27-F43-0	**VKDA 88401 T**			KIA / MAZDA	30-B68-A	**VKDC 81103 T**			TOYOTA
27-F44-0	**VKDA 88401 T**			KIA / MAZDA	30-B71-A	**VKDC 81104 T**			TOYOTA
27-F47-0	**VKDA 40401 T**			FORD	30-B72-A	**VKDC 81104 T**			TOYOTA
27-F47-A	**VKDA 40401 T**			FORD	30-B78-A	**VKDA 35508 T**			OPEL
27-F48-0	**VKDA 40401 T**			FORD	30-B78-F	**VKDA 35508 T**			OPEL
27-F48-A	**VKDA 40401 T**			FORD	30-B79-A	**VKDA 35508 T**			OPEL
27-F50-0	**VKDA 35407 T**	**VKDP 33401 T**		FORD / MAZDA	30-B79-F	**VKDA 35508 T**			OPEL
27-F50-A	**VKDA 35407 T**	**VKDP 33401 T**		FORD / MAZDA	30-B80-A	**VKDA 35508 T**			OPEL
27-F51-0	**VKDA 35407 T**	**VKDP 33401 T**		FORD / MAZDA	30-B81-A	**VKDA 35508 T**			OPEL
27-F51-A	**VKDA 35407 T**	**VKDP 33401 T**		FORD / MAZDA	30-B93-0	**VKDA 35407 T**			FORD
27-F52-0	**VKDA 40401 T**	**VKDP 43400 T**		FORD / MAZDA	30-B93-A	**VKDA 35407 T**			FORD
27-F52-A	**VKDA 40401 T**	**VKDP 43400 T**		FORD / MAZDA	30-B94-0	**VKDA 35619 T**	**VKDP 31602 T**		RENAULT
27-F53-0	**VKDA 40401 T**	**VKDP 43400 T**		FORD	30-B94-A	**VKDA 35619 T**	**VKDP 31602 T**		RENAULT
27-F53-A	**VKDA 40401 T**	**VKDP 43400 T**		FORD	30-C92-0	**VKDA 35319 T**			PEUGEOT
27-F54-0	**VKDA 35112 T**	**VKDP 33110 T**		SKODA	30-C92-A	**VKDA 35319 T**			PEUGEOT
27-F54-F	**VKDA 35112 T**	**VKDP 33110 T**		SKODA	30-C93-0	**VKDA 35319 T**			PEUGEOT
27-F59-F	**VKDA 35407 T**			FORD	30-C93-A	**VKDA 35319 T**			PEUGEOT
27-F60-F	**VKDA 40401 T**	**VKDP 43400 T**		FORD	30-C98-0	**VKDC 35202 T**			FIAT
27-F63-A	**VKDA 40104 T**			SEAT	30-C98-F	**VKDC 35202 T**			FIAT
27-F64-A	**VKDA 40104 T**			SEAT	30-D10-A	**VKDA 35315 T**	**VKDP 33304 T**		PEUGEOT
27-F69-A		**VKDP 83201 T**		TOYOTA	30-D10-F	**VKDA 35315 T**	**VKDP 33304 T**		PEUGEOT
27-F71-A	**VKDA 40805 T**			BMW	30-D11-A	**VKDA 35315 T**	**VKDP 33304 T**		PEUGEOT
27-F76-A	**VKDA 40805 T**			BMW	30-D11-F	**VKDA 35315 T**	**VKDP 33304 T**		PEUGEOT
27-F89-A	**VKDA 40401 T**			FORD	30-D32-0	**VKDA 35625 T**	**VKDP 31603 T**		RENAULT
27-F89-F	**VKDA 40401 T**			FORD	30-D32-F	**VKDA 35625 T**	**VKDP 31603 T**		RENAULT
28-A40-A		**VKDP 81400 T**		MAZDA	32-012-0		**VKDP 81400 T**		MAZDA
28-A41-A		**VKDP 81400 T**		MAZDA	32-013-0		**VKDP 81400 T**		MAZDA
30-023-A	**VKDC 81104 T**		⚠	TOYOTA	32-036-A	**VKDA 35201 T**	**VKDP 33800 T**		ALFA ROMEO
30-023-A	**VKDC 81105 T**		⚠	TOYOTA	32-037-A	**VKDA 35201 T**	**VKDP 33800 T**		ALFA ROMEO
30-036-A	**VKDA 81501 T**	**VKDP 81505 T**	⚠	MITSUBISHI	32-039-A	**VKDC 35802 T**	**VKDP 33800 T**		BMW
30-036-A	**VKDA 81501 T**	**VKDP 83502 T**	⚠	MITSUBISHI	32-040-A	**VKDC 35802 T**	**VKDP 33800 T**		BMW
30-036-A	**VKDA 81502 T**	**VKDP 81505 T**	⚠	MITSUBISHI	32-058-A	**VKDC 35801 T**	**VKDP 33800 T**		BMW
30-036-A	**VKDA 81502 T**	**VKDP 83502 T**	⚠	MITSUBISHI	32-076-0		**VKDP 33800 T**		BMW
30-039-A	**VKDC 81503 T**	**VKDP 83503 T**		MITSUBISHI	32-100-A	**VKDA 35201 T**	**VKDP 33800 T**		ALFA ROMEO
30-A18-A	**VKDC 81505 T**			KIA / MITSUBISHI	32-101-A	**VKDA 35201 T**	**VKDP 33800 T**		ALFA ROMEO
30-A24-A		**VKDP 81505 T**		MITSUBISHI	32-102-A	**VKDA 35201 T**	**VKDP 33800 T**		ALFA ROMEO
30-A25-A		**VKDP 33401 T**		HYUNDAI	32-103-A	**VKDA 35201 T**	**VKDP 33800 T**		ALFA ROMEO
30-A57-0	**VKDC 35202 T**	**VKDP 33203 T**		FIAT	32-118-0	**VKD 35005 T**	**VKDP 33500 T**	⚠	OPEL / VAUXHALL
30-A57-F	**VKDC 35202 T**	**VKDP 33203 T**		FIAT	32-118-0	VKDA 35513 T	**VKDP 33500 T**	⚠	OPEL / VAUXHALL
30-A58-0	**VKDA 35306 T**	**VKDP 33300 T**		CITROËN	32-118-F	**VKD 35005 T**	**VKDP 33500 T**	⚠	OPEL / VAUXHALL
30-A58-F	**VKDA 35306 T**	**VKDP 33300 T**		CITROËN	32-118-F	VKDA 35513 T	**VKDP 33500 T**	⚠	OPEL / VAUXHALL
30-A59-0	**VKDA 35306 T**	**VKDP 33300 T**		CITROËN	32-135-1	**VKDA 35608 T**	**VKDP 33600 T**		VOLVO
30-A59-F	**VKDA 35306 T**	**VKDP 33300 T**		CITROËN	32-135-F	**VKDA 35608 T**	**VKDP 33600 T**		VOLVO
30-A75-A	**VKDA 35220 T**		⚠	FIAT	32-135-P	**VKDA 35608 T**	**VKDP 33600 T**		VOLVO
30-A75-A	**VKDA 35221 T**		⚠	FIAT	32-138-0	**VKDA 35403 T**	**VKDP 33409 T**		FORD
30-A75-F	**VKDA 35220 T**		⚠	FIAT	32-138-F	**VKDA 35403 T**	**VKDP 33409 T**		FORD
30-A75-F	**VKDA 35221 T**		⚠	FIAT	32-161-F	**VKD 35001 T**			RENAULT
30-A78-A	**VKDA 88203 T**			NISSAN	32-162-F	**VKD 35001 T**			RENAULT
30-A79-A	**VKDA 88203 T**			NISSAN	32-189-A	**VKDC 35802 T**	**VKDP 33800 T**		BMW
30-A89-A		**VKDP 81400 T**		MAZDA	32-189-P	**VKDC 35802 T**	**VKDP 33800 T**		BMW
30-A90-A		**VKDP 93401 T**		MAZDA	32-190-A	**VKDC 35802 T**	**VKDP 33800 T**		BMW
30-A97-A	**VKDA 35308 T**	**VKDP 33306 T**	⚠	PEUGEOT	32-190-P	**VKDC 35802 T**	**VKDP 33800 T**		BMW
30-A97-A	**VKDA 35308 T**	**VKDP 32301 T**	⚠	PEUGEOT	32-201-0		**VKDP 33800 T**		BMW
30-A97-A	**VKDA 35308 T**	**VKDP 33303 T**	⚠	PEUGEOT	32-204-0		**VKDP 93401 T**		MAZDA

BOGE .../...

32-205-0		**VKDP 93401 T**		MAZDA
32-208-A		**VKDP 33800 T**		BMW
32-223-A		**VKDP 33800 T**	⚠	ALFA ROMEO / NISSAN
32-223-A		**VKDP 83201 T**	⚠	ALFA ROMEO / NISSAN
32-224-A		**VKDP 33800 T**	⚠	ALFA ROMEO / NISSAN
32-224-A		**VKDP 83201 T**	⚠	ALFA ROMEO / NISSAN
32-227-F	**VKDC 35802 T**	**VKDP 33800 T**		BMW
32-228-F	**VKDC 35802 T**	**VKDP 33800 T**		BMW
32-278-F	**VKDC 35820 T**	**VKDP 33800 T**		BMW
32-295-A	**VKDA 35200 T**	**VKDP 33202 T**		FIAT / LANCIA
32-295-D	**VKDA 35200 T**	**VKDP 33202 T**		FIAT / LANCIA
32-295-P	**VKDA 35200 T**	**VKDP 33202 T**		FIAT / LANCIA
32-301-F	**VKDC 35100 T**			AUDI
32-308-0	**VKDA 35510 T**	**VKDP 33504 T**		OPEL / VAUXHALL
32-309-0	**VKDA 35510 T**	**VKDP 33504 T**		OPEL / VAUXHALL
32-313-0	**VKDA 35603 T**	VKDP 32602 T		RENAULT
32-313-F	**VKDA 35603 T**	VKDP 32602 T		RENAULT
32-327-4	**VKDC 35611 T**			VOLVO
32-327-F	**VKDC 35611 T**			VOLVO
32-327-P	**VKDC 35611 T**			VOLVO
32-330-A	**VKDA 40813 T**			BMW
32-402-1	**VKD 35021 T**	**VKDP 33104 T**	⚠	AUDI
32-402-1	**VKD 35023 T**	**VKDP 33104 T**	⚠	AUDI
32-402-F	**VKD 35021 T**	**VKDP 33104 T**	⚠	AUDI
32-402-F	**VKD 35023 T**	**VKDP 33104 T**	⚠	AUDI
32-402-P	**VKD 35021 T**	**VKDP 33104 T**	⚠	AUDI
32-402-P	**VKD 35023 T**	**VKDP 33104 T**	⚠	AUDI
32-412-F	**VKDA 35510 T**	**VKDP 33504 T**	⚠	OPEL / VAUXHALL
32-412-F	**VKDA 35511 T**	**VKDP 33504 T**	⚠	OPEL / VAUXHALL
32-472-0	**VKDC 35100 T**	**VKDP 32103 T**		AUDI
32-472-F	**VKDC 35100 T**	**VKDP 32103 T**		AUDI
32-475-B	**VKDA 35222 T**		⚠	ALFA ROMEO
32-475-B	**VKDA 35223 T**		⚠	ALFA ROMEO
32-495-0	**VKDA 35403 T**	**VKDP 33409 T**		FORD
32-495-F	**VKDA 35403 T**	**VKDP 33409 T**		FORD
32-509-B	**VKDA 35200 T**	**VKDP 83201 T**		ALFA ROMEO
32-509-E	**VKDA 35200 T**	**VKDP 83201 T**		ALFA ROMEO
32-511-0	**VKDA 35400 T**	**VKDP 33405 T**	⚠	FORD
32-511-0	**VKDA 35416 T**	**VKDP 33405 T**	⚠	FORD
32-511-A	**VKDA 35200 T**			LANCIA
32-512-C	**VKDA 35201 T**	**VKDP 33800 T**		ALFA ROMEO
32-512-E	**VKDA 35201 T**	**VKDP 33800 T**		ALFA ROMEO
32-513-C	**VKDA 35201 T**	**VKDP 33800 T**		ALFA ROMEO
32-513-E	**VKDA 35201 T**	**VKDP 33800 T**		ALFA ROMEO
32-519-A	**VKDA 35201 T**	**VKDP 33800 T**		ALFA ROMEO
32-520-A	**VKDA 35201 T**	**VKDP 33800 T**		ALFA ROMEO
32-530-0	**VKDA 40101 T**	**VKDP 44100 T**		VW
32-530-F	**VKDA 40101 T**	**VKDP 44100 T**		VW
32-530-P	**VKDA 40101 T**	**VKDP 44100 T**		VW
32-557-F	**VKDC 35802 T**	**VKDP 33800 T**		BMW
32-558-F	**VKDC 35802 T**	**VKDP 33800 T**		BMW
32-568-1	**VKDC 35214 T**			FIAT / LANCIA
32-569-A	**VKDC 35213 T**		⚠	FIAT / LANCIA
32-569-A	**VKDC 35214 T**		⚠	FIAT / LANCIA
32-569-P	**VKDC 35213 T**		⚠	FIAT / LANCIA
32-569-P	**VKDC 35214 T**		⚠	FIAT / LANCIA
32-571-A	**VKDA 40208 T**			FIAT / LANCIA
32-571-P	**VKDA 40208 T**			FIAT / LANCIA
32-578-1	**VKDC 35504 T**	**VKDP 33500 T**	⚠	DAEWOO / OPEL / VAUXHALL
32-578-1	**VKDC 35505 T**	**VKDP 33500 T**	⚠	DAEWOO / OPEL / VAUXHALL
32-589-0	**VKD 35001 T**	**VKDP 32600 T**	⚠	RENAULT
32-589-0	**VKDA 35615 T**	**VKDP 32600 T**	⚠	RENAULT
32-592-0	**VKDC 35213 T**		⚠	FIAT / LANCIA
32-592-0	**VKDC 35214 T**		⚠	FIAT / LANCIA
32-597-0	**VKDA 35501 T**	**VKDP 33500 T**		OPEL / VAUXHALL
32-597-F	**VKDA 35501 T**	**VKDP 33500 T**		OPEL / VAUXHALL
32-598-A	**VKDA 35200 T**			LANCIA
32-641-0	**VKDA 35303 T**	**VKDP 33300 T**		CITROËN / PEUGEOT
32-641-F	**VKDA 35303 T**	**VKDP 33300 T**		CITROËN / PEUGEOT
32-650-F	**VKDA 40809 T**			BMW
32-650-P	**VKDA 40809 T**			BMW
32-656-0	**VKDA 40208 T**			FIAT / LANCIA
32-661-H	**VKDA 35200 T**	**VKDP 83201 T**		ALFA ROMEO
32-661-K	**VKDA 35200 T**	**VKDP 83201 T**		ALFA ROMEO
32-679-0	**VKDA 35602 T**	VKDP 31606 T		RENAULT
32-682-A	**VKDA 40208 T**			FIAT / LANCIA
32-682-P	**VKDA 40208 T**			FIAT / LANCIA
32-703-A	**VKDA 35222 T**		⚠	ALFA ROMEO
32-703-A	**VKDA 35223 T**		⚠	ALFA ROMEO
32-720-F	**VKDC 35801 T**	**VKDP 33800 T**		BMW
32-721-0	**VKDA 40101 T**	**VKDP 44100 T**		VW
32-759-A	**VKDA 35200 T**			FIAT
32-764-A	**VKDA 35200 T**			FIAT
32-783-0		**VKDP 43700 T**		AUDI / MOSKVICH
32-803-0		**VKDP 33501 T**		OPEL / VAUXHALL
32-803-F		**VKDP 33501 T**		OPEL / VAUXHALL
32-804-0	**VKD 35005 T**	**VKDP 33500 T**	⚠	OPEL / VAUXHALL
32-804-0	VKDA 35513 T	**VKDP 33500 T**	⚠	OPEL / VAUXHALL
32-804-F	**VKD 35005 T**	**VKDP 33500 T**	⚠	OPEL / VAUXHALL
32-804-F	VKDA 35513 T	**VKDP 33500 T**	⚠	OPEL / VAUXHALL
32-810-0	**VKDA 35110 T**	**VKDP 33108 T**	⚠	VW
32-810-0	**VKDA 35110 T**	**VKDP 33100 T**	⚠	VW
32-810-0	**VKDC 35100 T**	**VKDP 33108 T**	⚠	VW
32-810-0	**VKDC 35100 T**	**VKDP 33100 T**	⚠	VW
32-810-0	**VKDC 35101 T**	**VKDP 33108 T**	⚠	VW
32-810-0	**VKDC 35101 T**	**VKDP 33100 T**	⚠	VW
32-810-F	**VKDA 35110 T**	**VKDP 33100 T**	⚠	VW
32-810-F	**VKDA 35110 T**	**VKDP 33108 T**	⚠	VW
32-810-F	**VKDC 35100 T**	**VKDP 33100 T**	⚠	VW
32-810-F	**VKDC 35100 T**	**VKDP 33108 T**	⚠	VW
32-810-F	**VKDC 35101 T**	**VKDP 33100 T**	⚠	VW
32-810-F	**VKDC 35101 T**	**VKDP 33108 T**	⚠	VW
32-810-P	**VKDA 35110 T**	**VKDP 33100 T**	⚠	VW
32-810-P	**VKDA 35110 T**	**VKDP 33108 T**	⚠	VW
32-810-P	**VKDC 35101 T**	**VKDP 33100 T**	⚠	VW
32-810-P	**VKDC 35101 T**	**VKDP 33108 T**	⚠	VW
32-811-A		**VKDP 33800 T**		ALFA ROMEO
32-812-A		**VKDP 33800 T**		ALFA ROMEO
32-836-0	**VKDC 35801 T**	**VKDP 33800 T**		BMW
32-839-F	**VKDC 35801 T**	**VKDP 33800 T**		BMW
32-846-0	**VKDC 35100 T**	**VKDP 32103 T**	⚠	AUDI / VW
32-846-0	**VKDC 35100 T**	**VKDP 33100 T**	⚠	AUDI / VW
32-846-F	**VKDC 35100 T**	**VKDP 32103 T**	⚠	AUDI / VW
32-846-F	**VKDC 35100 T**	**VKDP 33100 T**	⚠	AUDI / VW
32-869-0		**VKDP 33108 T**		LADA
32-869-F		**VKDP 33108 T**		LADA
32-870-1	**VKDA 35608 T**	**VKDP 33600 T**		VOLVO
32-873-F	**VKDC 35504 T**	**VKDP 33500 T**	⚠	DAEWOO / OPEL / VAUXHALL
32-873-F	**VKDC 35505 T**	**VKDP 33500 T**	⚠	DAEWOO / OPEL / VAUXHALL
32-875-A	**VKDC 35802 T**	**VKDP 33800 T**		BMW
32-876-A	**VKDC 35802 T**	**VKDP 33800 T**		BMW
32-882-3	**VKD 35012 T**	**VKDP 33603 T**		VOLVO
32-939-0		**VKDP 33800 T**		BMW

32-939-1	**VKDC 35801 T**	**VKDP 33800 T**		BMW
32-939-F	**VKDC 35801 T**	**VKDP 33800 T**		BMW
32-961-F	**VKDC 35802 T**	**VKDP 33800 T**		BMW
32-962-F	**VKDC 35802 T**	**VKDP 33800 T**		BMW
32-967-F	**VKDC 35801 T**	**VKDP 33800 T**		BMW
32-979-A	**VKDC 35801 T**	**VKDP 33800 T**		BMW
32-984-A	**VKDA 40208 T**			ALFA ROMEO
32-A09-0		**VKDP 84402 T**		MAZDA
32-A10-0		**VKDP 84402 T**		MAZDA
32-A15-A		**VKDP 43400 T**		MAZDA
32-A16-0	**VKDA 81501 T**	**VKDP 81505 T**	⚠	MITSUBISHI
32-A16-0	**VKDA 81501 T**	**VKDP 83502 T**	⚠	MITSUBISHI
32-A16-0	**VKDA 81502 T**	**VKDP 81505 T**	⚠	MITSUBISHI
32-A16-0	**VKDA 81502 T**	**VKDP 83502 T**	⚠	MITSUBISHI
32-A21-A	**VKDC 81105 T**			TOYOTA
32-A30-0	**VKDA 35303 T**	**VKDP 33300 T**	⚠	PEUGEOT
32-A30-0	**VKDA 35304 T**	**VKDP 33300 T**	⚠	PEUGEOT
32-A30-0	**VKDA 35305 T**	**VKDP 33300 T**	⚠	PEUGEOT
32-A30-F	**VKDA 35303 T**	**VKDP 33300 T**	⚠	PEUGEOT
32-A30-F	**VKDA 35304 T**	**VKDP 33300 T**	⚠	PEUGEOT
32-A30-F	**VKDA 35305 T**	**VKDP 33300 T**	⚠	PEUGEOT
32-A33-0	**VKD 35001 T**	**VKDP 32600 T**	⚠	RENAULT
32-A33-0	**VKDA 35615 T**	**VKDP 32600 T**	⚠	RENAULT
32-A33-0	**VKDA 35616 T**	**VKDP 32600 T**	⚠	RENAULT
32-A33-F	**VKD 35001 T**	**VKDP 32600 T**	⚠	RENAULT
32-A33-F	**VKDA 35615 T**	**VKDP 32600 T**	⚠	RENAULT
32-A33-F	**VKDA 35616 T**	**VKDP 32600 T**	⚠	RENAULT
32-A36-F	**VKDA 35303 T**	**VKDP 33300 T**		CITROËN / PEUGEOT
32-A37-F	**VKDA 35303 T**	**VKDP 33300 T**		CITROËN / PEUGEOT
32-A39-0	**VKDA 35602 T**	VKDP 31606 T		RENAULT
32-A40-0	**VKDA 35602 T**	VKDP 31606 T		RENAULT
32-A40-F	**VKDA 35602 T**	VKDP 31606 T		RENAULT
32-A42-A	**VKDC 81104 T**			TOYOTA
32-A48-F	**VKDA 35400 T**	**VKDP 33405 T**	⚠	FORD / VAUXHALL
32-A48-F	**VKDA 35400 T**	**VKDP 34500 T**	⚠	FORD / VAUXHALL
32-A48-F	**VKDA 35416 T**	**VKDP 33405 T**	⚠	FORD / VAUXHALL
32-A48-F	**VKDA 35416 T**	**VKDP 34500 T**	⚠	FORD / VAUXHALL
32-A48-F	**VKDA 35508 T**	**VKDP 33405 T**	⚠	FORD / VAUXHALL
32-A48-F	**VKDA 35508 T**	**VKDP 34500 T**	⚠	FORD / VAUXHALL
32-A49-F	**VKDA 35304 T**	**VKDP 33300 T**	⚠	PEUGEOT
32-A49-F	**VKDA 35305 T**	**VKDP 33300 T**	⚠	PEUGEOT
32-A64-0	**VKDA 35401 T**	**VKDP 33401 T**		FORD
32-A64-A	**VKDA 35401 T**	**VKDP 31400 T**	⚠	FORD
32-A64-A	**VKDA 35401 T**	**VKDP 33401 T**	⚠	FORD
32-A65-0	**VKDA 35319 T**	**VKDP 33308 T**		PEUGEOT
32-A65-F	**VKDA 35319 T**	**VKDP 33308 T**		PEUGEOT
32-A66-0	**VKDA 35319 T**	**VKDP 33308 T**		PEUGEOT
32-A66-F	**VKDA 35319 T**	**VKDP 33308 T**		PEUGEOT
32-A67-F	**VKDC 35420 T**	**VKDP 33408 T**		SAAB
32-A68-0	**VKDA 35401 T**	**VKDP 33401 T**		FORD
32-A68-A	**VKDA 35401 T**	**VKDP 33401 T**		FORD
32-A69-F	**VKDA 35110 T**	**VKDP 33100 T**	⚠	SEAT / VW
32-A69-F	**VKDA 35110 T**	**VKDP 33107 T**	⚠	SEAT / VW
32-A69-F	**VKDA 35110 T**	**VKDP 33108 T**	⚠	SEAT / VW
32-A69-F	**VKDA 35115 T**	**VKDP 33100 T**	⚠	SEAT / VW
32-A69-F	**VKDA 35115 T**	**VKDP 33107 T**	⚠	SEAT / VW
32-A69-F	**VKDA 35115 T**	**VKDP 33108 T**	⚠	SEAT / VW
32-A69-F	**VKDC 35101 T**	**VKDP 33100 T**	⚠	SEAT / VW
32-A69-F	**VKDC 35101 T**	**VKDP 33107 T**	⚠	SEAT / VW
32-A69-F	**VKDC 35101 T**	**VKDP 33108 T**	⚠	SEAT / VW
32-A69-F	**VKDC 35102 T**	**VKDP 33100 T**	⚠	SEAT / VW
32-A69-F	**VKDC 35102 T**	**VKDP 33107 T**	⚠	SEAT / VW
32-A69-F	**VKDC 35102 T**	**VKDP 33108 T**	⚠	SEAT / VW
32-A70-0	**VKDA 35110 T**	**VKDP 33100 T**	⚠	VW
32-A70-0	**VKDA 35110 T**	**VKDP 33108 T**	⚠	VW
32-A70-0	**VKDC 35100 T**	**VKDP 33100 T**	⚠	VW
32-A70-0	**VKDC 35100 T**	**VKDP 33108 T**	⚠	VW
32-A70-0	**VKDC 35101 T**	**VKDP 33100 T**	⚠	VW
32-A70-0	**VKDC 35101 T**	**VKDP 33108 T**	⚠	VW
32-A70-F	**VKDA 35110 T**	**VKDP 33108 T**	⚠	VW
32-A70-F	**VKDA 35110 T**	**VKDP 33100 T**	⚠	VW
32-A70-F	**VKDC 35100 T**	**VKDP 33108 T**	⚠	VW
32-A70-F	**VKDC 35100 T**	**VKDP 33100 T**	⚠	VW
32-A70-F	**VKDC 35101 T**	**VKDP 33108 T**	⚠	VW
32-A70-F	**VKDC 35101 T**	**VKDP 33100 T**	⚠	VW
32-A71-0	**VKDA 35503 T**	**VKDP 34500 T**	⚠	OPEL / VAUXHALL
32-A71-0	**VKDA 35503 T**	**VKDP 33501 T**	⚠	OPEL / VAUXHALL
32-A71-0	**VKDA 35503 T**	**VKDP 33500 T**	⚠	OPEL / VAUXHALL
32-A71-0	**VKDA 35515 T**	**VKDP 34500 T**	⚠	OPEL / VAUXHALL
32-A71-0	**VKDA 35515 T**	**VKDP 33501 T**	⚠	OPEL / VAUXHALL
32-A71-0	**VKDA 35515 T**	**VKDP 33500 T**	⚠	OPEL / VAUXHALL
32-A72-A	**VKDA 35503 T**	**VKDP 33500 T**	⚠	OPEL / VAUXHALL
32-A72-A	**VKDA 35503 T**	**VKDP 33501 T**	⚠	OPEL / VAUXHALL
32-A72-A	**VKDA 35503 T**	**VKDP 34500 T**	⚠	OPEL / VAUXHALL
32-A72-A	**VKDA 35515 T**	**VKDP 33500 T**	⚠	OPEL / VAUXHALL
32-A72-A	**VKDA 35515 T**	**VKDP 33501 T**	⚠	OPEL / VAUXHALL
32-A72-A	**VKDA 35515 T**	**VKDP 34500 T**	⚠	OPEL / VAUXHALL
32-A75-0	**VKDA 35110 T**	**VKDP 33100 T**	⚠	VW
32-A75-0	**VKDA 35110 T**	**VKDP 33108 T**	⚠	VW
32-A75-0	**VKDC 35100 T**	**VKDP 33100 T**	⚠	VW
32-A75-0	**VKDC 35100 T**	**VKDP 33108 T**	⚠	VW
32-A75-0	**VKDC 35101 T**	**VKDP 33100 T**	⚠	VW
32-A75-0	**VKDC 35101 T**	**VKDP 33108 T**	⚠	VW
32-A75-F	**VKDA 35110 T**	**VKDP 33100 T**	⚠	VW
32-A75-F	**VKDA 35110 T**	**VKDP 33108 T**	⚠	VW
32-A75-F	**VKDC 35100 T**	**VKDP 33100 T**	⚠	VW
32-A75-F	**VKDC 35100 T**	**VKDP 33108 T**	⚠	VW
32-A75-F	**VKDC 35101 T**	**VKDP 33100 T**	⚠	VW
32-A75-F	**VKDC 35101 T**	**VKDP 33108 T**	⚠	VW
32-A77-0	**VKDA 35306 T**	**VKDP 33300 T**	⚠	CITROËN
32-A77-0	**VKDA 35307 T**	**VKDP 33300 T**	⚠	CITROËN
32-A77-F	**VKDA 35306 T**	**VKDP 33300 T**	⚠	CITROËN
32-A77-F	**VKDA 35307 T**	**VKDP 33300 T**	⚠	CITROËN
32-A78-0	**VKDA 35306 T**	**VKDP 33300 T**	⚠	CITROËN
32-A78-0	**VKDA 35307 T**	**VKDP 33300 T**	⚠	CITROËN
32-A78-F	**VKDA 35306 T**	**VKDP 33300 T**	⚠	CITROËN
32-A78-F	**VKDA 35307 T**	**VKDP 33300 T**	⚠	CITROËN
32-A79-0	**VKDA 35306 T**	**VKDP 33300 T**	⚠	CITROËN / PEUGEOT
32-A79-0	**VKDA 35307 T**	**VKDP 33300 T**	⚠	CITROËN / PEUGEOT
32-A79-F	**VKDA 35306 T**	**VKDP 33300 T**	⚠	CITROËN / PEUGEOT
32-A79-F	**VKDA 35307 T**	**VKDP 33300 T**	⚠	CITROËN / PEUGEOT
32-A80-0	**VKDA 35306 T**	**VKDP 33300 T**	⚠	CITROËN / PEUGEOT
32-A80-0	**VKDA 35307 T**	**VKDP 33300 T**	⚠	CITROËN / PEUGEOT
32-A80-F	**VKDA 35306 T**	**VKDP 33300 T**	⚠	CITROËN / PEUGEOT
32-A80-F	**VKDA 35307 T**	**VKDP 33300 T**	⚠	CITROËN / PEUGEOT
32-A81-0	**VKDA 35306 T**	**VKDP 33300 T**	⚠	CITROËN
32-A81-0	**VKDA 35307 T**	**VKDP 33300 T**	⚠	CITROËN
32-A81-F	**VKDA 35306 T**	**VKDP 33300 T**	⚠	CITROËN
32-A81-F	**VKDA 35307 T**	**VKDP 33300 T**	⚠	CITROËN
32-A82-0	**VKDA 35306 T**	**VKDP 33300 T**	⚠	CITROËN

BOGE .../...

32-A82-0	**VKDA 35307 T**	**VKDP 33300 T**	⚠	CITROËN
32-A82-F	**VKDA 35306 T**	**VKDP 33300 T**	⚠	CITROËN
32-A82-F	**VKDA 35307 T**	**VKDP 33300 T**	⚠	CITROËN
32-A84-0	**VKDA 35402 T**	**VKDP 33400 T**		FORD
32-A84-F	**VKDA 35402 T**	**VKDP 33400 T**		FORD
32-A85-0	**VKDA 40400 T**	**VKDP 43403 T**		FORD
32-A85-F	**VKDA 40400 T**	**VKDP 43403 T**		FORD
32-A86-F	**VKDA 40400 T**	**VKDP 43403 T**		FORD
32-A87-0	**VKDA 35306 T**	**VKDP 33300 T**	⚠	PEUGEOT
32-A87-0	**VKDA 35307 T**	**VKDP 33300 T**	⚠	PEUGEOT
32-A87-F	**VKD 35002 T**	**VKDP 33300 T**	⚠	CITROËN / PEUGEOT
32-A87-F	**VKDA 35306 T**	**VKDP 33300 T**	⚠	CITROËN / PEUGEOT
32-A87-F	**VKDA 35307 T**	**VKDP 33300 T**	⚠	CITROËN / PEUGEOT
32-A88-0	**VKDA 35306 T**	**VKDP 33300 T**	⚠	PEUGEOT
32-A88-0	**VKDA 35307 T**	**VKDP 33300 T**	⚠	PEUGEOT
32-A88-F	**VKD 35002 T**	**VKDP 33300 T**	⚠	CITROËN / PEUGEOT
32-A88-F	**VKDA 35306 T**	**VKDP 33300 T**	⚠	CITROËN / PEUGEOT
32-A88-F	**VKDA 35307 T**	**VKDP 33300 T**	⚠	CITROËN / PEUGEOT
32-A92-0	**VKDA 88203 T**		⚠	NISSAN
32-A92-0	**VKDA 88204 T**		⚠	NISSAN
32-A92-A	**VKDA 88203 T**		⚠	NISSAN
32-A92-A	**VKDA 88204 T**		⚠	NISSAN
32-A97-A	**VKDA 88203 T**			NISSAN
32-A98-A	**VKDA 88203 T**			NISSAN
32-B03-A		**VKDP 93203 T**		NISSAN
32-B04-A		**VKDP 93203 T**		NISSAN
32-B26-0	**VKDC 35202 T**	**VKDP 33203 T**		FIAT
32-B26-F	**VKDC 35202 T**	**VKDP 33203 T**		FIAT
32-B48-F	**VKDA 35510 T**	**VKDP 33504 T**	⚠	OPEL / VAUXHALL
32-B48-F	**VKDA 35511 T**	**VKDP 33504 T**	⚠	OPEL / VAUXHALL
32-B53-F	**VKDC 35420 T**	**VKDP 33408 T**		SAAB
32-B56-F	**VKD 35032 T**	**VKDP 33406 T**		SAAB
32-B57-F	**VKD 35032 T**	**VKDP 33406 T**		SAAB
32-B58-0	**VKD 35001 T**	**VKDP 33605 T**		VOLVO
32-B58-A	**VKD 35001 T**	**VKDP 33605 T**		VOLVO
32-B64-0	**VKDA 40400 T**	**VKDP 43403 T**		FORD
32-B64-F	**VKDA 40400 T**	**VKDP 43403 T**		FORD
32-B65-F	**VKDA 40400 T**	**VKDP 43403 T**		FORD
32-B66-F	**VKDA 35110 T**	**VKDP 33100 T**	⚠	SEAT / VW
32-B66-F	**VKDA 35110 T**	**VKDP 33107 T**	⚠	SEAT / VW
32-B66-F	**VKDA 35110 T**	**VKDP 33108 T**	⚠	SEAT / VW
32-B66-F	**VKDA 35115 T**	**VKDP 33100 T**	⚠	SEAT / VW
32-B66-F	**VKDA 35115 T**	**VKDP 33107 T**	⚠	SEAT / VW
32-B66-F	**VKDA 35115 T**	**VKDP 33108 T**	⚠	SEAT / VW
32-B66-F	**VKDC 35101 T**	**VKDP 33100 T**	⚠	SEAT / VW
32-B66-F	**VKDC 35101 T**	**VKDP 33107 T**	⚠	SEAT / VW
32-B66-F	**VKDC 35101 T**	**VKDP 33108 T**	⚠	SEAT / VW
32-B66-F	**VKDC 35102 T**	**VKDP 33100 T**	⚠	SEAT / VW
32-B66-F	**VKDC 35102 T**	**VKDP 33107 T**	⚠	SEAT / VW
32-B66-F	**VKDC 35102 T**	**VKDP 33108 T**	⚠	SEAT / VW
32-B72-F	**VKDA 35508 T**	**VKDP 34500 T**	⚠	OPEL / VAUXHALL
32-B72-F	**VKDA 35509 T**	**VKDP 34500 T**	⚠	OPEL / VAUXHALL
32-B73-F	**VKDA 35508 T**	**VKDP 34500 T**	⚠	OPEL / VAUXHALL
32-B73-F	**VKDA 35509 T**	**VKDP 34500 T**	⚠	OPEL / VAUXHALL
32-B74-F	**VKDA 35509 T**	**VKDP 34500 T**		OPEL / VAUXHALL
32-B75-F	**VKDA 35509 T**	**VKDP 34500 T**		OPEL / VAUXHALL
32-B76-0	**VKDA 35110 T**	**VKDP 33100 T**	⚠	SEAT / VW
32-B76-0	**VKDA 35110 T**	**VKDP 33107 T**	⚠	SEAT / VW
32-B76-0	**VKDA 35110 T**	**VKDP 33800 T**	⚠	SEAT / VW
32-B76-0	**VKDA 35111 T**	**VKDP 33100 T**	⚠	SEAT / VW
32-B76-0	**VKDA 35111 T**	**VKDP 33107 T**	⚠	SEAT / VW
32-B76-0	**VKDA 35111 T**	**VKDP 33800 T**	⚠	SEAT / VW
32-B76-0	**VKDA 35115 T**	**VKDP 33100 T**	⚠	SEAT / VW
32-B76-0	**VKDA 35115 T**	**VKDP 33107 T**	⚠	SEAT / VW
32-B76-0	**VKDA 35115 T**	**VKDP 33800 T**	⚠	SEAT / VW
32-B76-0	**VKDC 35102 T**	**VKDP 33100 T**	⚠	SEAT / VW
32-B76-0	**VKDC 35102 T**	**VKDP 33107 T**	⚠	SEAT / VW
32-B76-0	**VKDC 35102 T**	**VKDP 33800 T**	⚠	SEAT / VW
32-B76-F	**VKDA 35110 T**	**VKDP 33100 T**	⚠	SEAT / VW
32-B76-F	**VKDA 35110 T**	**VKDP 33107 T**	⚠	SEAT / VW
32-B76-F	**VKDA 35110 T**	**VKDP 33800 T**	⚠	SEAT / VW
32-B76-F	**VKDA 35111 T**	**VKDP 33100 T**	⚠	SEAT / VW
32-B76-F	**VKDA 35111 T**	**VKDP 33107 T**	⚠	SEAT / VW
32-B76-F	**VKDA 35111 T**	**VKDP 33800 T**	⚠	SEAT / VW
32-B76-F	**VKDA 35115 T**	**VKDP 33100 T**	⚠	SEAT / VW
32-B76-F	**VKDA 35115 T**	**VKDP 33107 T**	⚠	SEAT / VW
32-B76-F	**VKDA 35115 T**	**VKDP 33800 T**	⚠	SEAT / VW
32-B76-F	**VKDC 35102 T**	**VKDP 33100 T**	⚠	SEAT / VW
32-B76-F	**VKDC 35102 T**	**VKDP 33107 T**	⚠	SEAT / VW
32-B76-F	**VKDC 35102 T**	**VKDP 33800 T**	⚠	SEAT / VW
32-B77-F	**VKDC 35203 T**	**VKDP 31200 T**		FIAT / LANCIA
32-B84-F	**VKDC 35801 T**	**VKDP 33800 T**		BMW
32-C01-F	**VKDC 35802 T**			BMW
32-C02-F	**VKDC 35802 T**			BMW
32-C03-F	**VKDC 35802 T**			BMW
32-C04-F	**VKDC 35802 T**			BMW
32-C05-F	**VKDA 35402 T**	**VKDP 33400 T**		FORD
32-C06-F	**VKDA 35402 T**	**VKDP 33400 T**		FORD
32-C07-F	**VKDA 40400 T**	**VKDP 43403 T**		FORD
32-C08-F	**VKDA 40400 T**	**VKDP 43403 T**		FORD
32-C10-0	**VKDC 35634 T**	**VKDP 33500 T**		VOLVO
32-C13-F	**VKDC 81504 T**			MITSUBISHI / PROTON
32-C14-F	**VKDC 81504 T**			MITSUBISHI / PROTON
32-C26-0	**VKDA 35623 T**	**VKDP 32601 T**		RENAULT
32-C26-F	**VKDA 35623 T**	**VKDP 32601 T**		RENAULT
32-C27-0	**VKDA 35623 T**	**VKDP 32601 T**		RENAULT
32-C27-F	**VKDA 35623 T**	**VKDP 32601 T**		RENAULT
32-C81-F	**VKDA 35110 T**	**VKDP 33405 T**		FORD / SEAT / VW
32-C82-0	**VKDA 35300 T**	**VKDP 33300 T**	⚠	CITROËN / PEUGEOT
32-C82-0	**VKDA 35300 T**	**VKDP 34303 T**	⚠	CITROËN / PEUGEOT
32-C82-0	**VKDA 35302 T**	**VKDP 33300 T**	⚠	CITROËN / PEUGEOT
32-C82-0	**VKDA 35302 T**	**VKDP 34303 T**	⚠	CITROËN / PEUGEOT
32-C82-F	**VKDA 35300 T**	**VKDP 34303 T**	⚠	CITROËN / PEUGEOT
32-C82-F	**VKDA 35300 T**	**VKDP 33300 T**	⚠	CITROËN / PEUGEOT
32-C82-F	**VKDA 35302 T**	**VKDP 34303 T**	⚠	CITROËN / PEUGEOT
32-C82-F	**VKDA 35302 T**	**VKDP 33300 T**	⚠	CITROËN / PEUGEOT
32-C83-F	**VKDA 35317 T**	**VKDP 33301 T**		CITROËN / FIAT / LANCIA / PEUGEOT
32-C84-0	**VKDA 35317 T**	**VKDP 33301 T**		CITROËN / FIAT / PEUGEOT
32-C84-F	**VKDA 35317 T**	**VKDP 33301 T**		CITROËN / FIAT / PEUGEOT
32-C87-0	**VKD 35002 T**	**VKDP 33300 T**	⚠	CITROËN / PEUGEOT
32-C87-0	**VKDA 35306 T**	**VKDP 33300 T**	⚠	CITROËN / PEUGEOT

32-C87-0	**VKDA 35307 T**	**VKDP 33300 T**	⚠	CITROËN / PEUGEOT	32-D83-F	**VKDC 35814 T**	**VKDP 33800 T**		BMW
32-C87-F	**VKD 35002 T**	**VKDP 33300 T**	⚠	CITROËN / PEUGEOT	32-D86-A	**VKDC 35814 T**	**VKDP 33800 T**		BMW
32-C87-F	**VKDA 35306 T**	**VKDP 33300 T**	⚠	CITROËN / PEUGEOT	32-D86-F	**VKDC 35814 T**	**VKDP 33800 T**		BMW
32-C87-F	**VKDA 35307 T**	**VKDP 33300 T**	⚠	CITROËN / PEUGEOT	32-D87-A	**VKDC 35814 T**	**VKDP 33800 T**		BMW
32-C88-0	**VKD 35002 T**	**VKDP 33300 T**	⚠	CITROËN / PEUGEOT	32-D87-F	**VKDC 35814 T**	**VKDP 33800 T**		BMW
32-C88-0	**VKDA 35306 T**	**VKDP 33300 T**	⚠	CITROËN / PEUGEOT	32-D88-F	**VKDC 35814 T**	**VKDP 33800 T**		BMW
32-C88-0	**VKDA 35307 T**	**VKDP 33300 T**	⚠	CITROËN / PEUGEOT	32-D89-F	**VKDC 35814 T**	**VKDP 33800 T**		BMW
32-C88-F	**VKD 35002 T**	**VKDP 33300 T**	⚠	CITROËN / PEUGEOT	32-D90-0	**VKDA 35312 T**	**VKDP 32302 T**	⚠	PEUGEOT
32-C88-F	**VKDA 35306 T**	**VKDP 33300 T**	⚠	CITROËN / PEUGEOT	32-D90-0	**VKDA 35312 T**	**VKDP 33308 T**	⚠	PEUGEOT
32-C88-F	**VKDA 35307 T**	**VKDP 33300 T**	⚠	CITROËN / PEUGEOT	32-D90-F	**VKDA 35312 T**	**VKDP 32302 T**	⚠	PEUGEOT
32-C89-0	**VKDA 35306 T**	**VKDP 33300 T**	⚠	CITROËN / PEUGEOT	32-D90-F	**VKDA 35312 T**	**VKDP 33308 T**	⚠	PEUGEOT
32-C89-0	**VKDA 35307 T**	**VKDP 33300 T**	⚠	CITROËN / PEUGEOT	32-D91-0	**VKDA 35312 T**	**VKDP 32302 T**	⚠	PEUGEOT
32-C89-F	**VKDA 35306 T**	**VKDP 33300 T**	⚠	CITROËN / PEUGEOT	32-D91-0	**VKDA 35312 T**	**VKDP 33308 T**	⚠	PEUGEOT
32-C89-F	**VKDA 35307 T**	**VKDP 33300 T**	⚠	CITROËN / PEUGEOT	32-D91-F	**VKDA 35312 T**	**VKDP 33308 T**	⚠	PEUGEOT
32-C90-0	**VKDA 35306 T**	**VKDP 33300 T**	⚠	CITROËN / PEUGEOT	32-D91-F	**VKDA 35312 T**	**VKDP 32302 T**	⚠	PEUGEOT
32-C90-0	**VKDA 35307 T**	**VKDP 33300 T**	⚠	CITROËN / PEUGEOT	32-D92-0	**VKDA 35312 T**	**VKDP 32302 T**	⚠	PEUGEOT
32-C90-F	**VKDA 35306 T**	**VKDP 33300 T**	⚠	CITROËN / PEUGEOT	32-D92-0	**VKDA 35312 T**	**VKDP 33308 T**	⚠	PEUGEOT
32-C90-F	**VKDA 35307 T**	**VKDP 33300 T**	⚠	CITROËN / PEUGEOT	32-D92-F	**VKDA 35312 T**	**VKDP 32302 T**	⚠	PEUGEOT
32-C91-0	**VKD 35001 T**	**VKDP 32600 T**	⚠	RENAULT	32-D92-F	**VKDA 35312 T**	**VKDP 33308 T**	⚠	PEUGEOT
32-C91-0	**VKDA 35615 T**	**VKDP 32600 T**	⚠	RENAULT	32-D93-0	**VKDA 35312 T**	**VKDP 32302 T**	⚠	PEUGEOT
32-C91-F	**VKD 35001 T**	**VKDP 32600 T**	⚠	RENAULT	32-D93-0	**VKDA 35312 T**	**VKDP 33308 T**	⚠	PEUGEOT
32-C91-F	**VKDA 35615 T**	**VKDP 32600 T**	⚠	RENAULT	32-D93-F	**VKDA 35312 T**	**VKDP 33308 T**	⚠	PEUGEOT
32-C92-0	**VKDA 35615 T**	**VKDP 32600 T**		RENAULT	32-D93-F	**VKDA 35312 T**	**VKDP 32302 T**	⚠	PEUGEOT
32-C92-F	**VKDA 35615 T**	**VKDP 32600 T**		RENAULT	32-D94-0	**VKDA 40300 T**			PEUGEOT
32-C96-F	**VKDA 35302 T**	**VKDP 33300 T**		PEUGEOT	32-D94-F	**VKDA 40300 T**			PEUGEOT
32-D01-F	**VKDC 81201 T**			NISSAN	32-D95-0	**VKDA 40300 T**		⚠	PEUGEOT
32-D02-F	**VKDC 81201 T**			NISSAN	32-D95-0	**VKDA 40302 T**		⚠	PEUGEOT
32-D05-F	**VKDA 35508 T**	**VKDP 34500 T**	⚠	OPEL / VAUXHALL	32-D95-F	**VKDA 40300 T**		⚠	PEUGEOT
32-D05-F	**VKDA 35509 T**	**VKDP 34500 T**	⚠	OPEL / VAUXHALL	32-D95-F	**VKDA 40302 T**		⚠	PEUGEOT
32-D06-F	**VKDA 35508 T**	**VKDP 34500 T**	⚠	OPEL / VAUXHALL	32-D99-F	**VKDA 35620 T**	**VKDP 32601 T**		RENAULT
32-D06-F	**VKDA 35509 T**	**VKDP 34500 T**	⚠	OPEL / VAUXHALL	32-E05-A	**VKDA 35236 T**			FIAT
32-D07-F	**VKDA 35509 T**	**VKDP 34500 T**		OPEL / VAUXHALL	32-E06-A	**VKDA 35236 T**			FIAT
32-D08-F	**VKDA 35509 T**	**VKDP 34500 T**		OPEL / VAUXHALL	32-E08-A	**VKD 35018 T**			LANCIA
32-D14-F	**VKDA 40109 T**			AUDI / VW	32-E09-A	**VKD 35018 T**			LANCIA
32-D17-0		**VKDP 93402 T**		MAZDA	32-E14-0	**VKDA 35113 T**	**VKDP 33101 T**		AUDI / SEAT / SKODA / VW
32-D18-F	**VKDA 40204 T**			ALFA ROMEO	32-E14-F	**VKDA 35113 T**	**VKDP 33101 T**		AUDI / SEAT / SKODA / VW
32-D23-A	**VKDC 35204 T**	**VKDP 33300 T**		FIAT	32-E16-A	**VKDC 35204 T**			FIAT
32-D23-F	**VKDC 35204 T**	**VKDP 33300 T**		FIAT	32-E16-F	**VKDC 35204 T**			FIAT
32-D25-A	**VKDA 35200 T**	**VKDP 33300 T**	⚠	FIAT	32-E17-0	**VKDA 35615 T**	**VKDP 32600 T**		RENAULT
32-D25-A	**VKDC 35204 T**	**VKDP 33300 T**	⚠	FIAT	32-E17-F	**VKDA 35615 T**	**VKDP 32600 T**		RENAULT
32-D28-A	**VKDC 35204 T**			FIAT	32-E67-0	**VKDA 35607 T**	**VKDP 31601 T**		RENAULT
32-D28-F	**VKDC 35204 T**			FIAT	32-E67-F	**VKDA 35607 T**	**VKDP 31601 T**		RENAULT
32-D38-A	**VKD 35020 T**			LANCIA	32-E68-0	**VKDA 35607 T**	**VKDP 31601 T**		RENAULT
32-D39-A	**VKD 35020 T**			LANCIA	32-E68-F	**VKDA 35607 T**	**VKDP 31601 T**		RENAULT
32-D57-A		**VKDP 84401 T**		MAZDA	32-E70-0	**VKDA 35600 T**	**VKDP 31601 T**	⚠	RENAULT
32-D58-A		**VKDP 84401 T**		MAZDA	32-E70-0	**VKDA 35601 T**	**VKDP 31601 T**	⚠	RENAULT
32-D59-0	**VKDC 35634 T**	**VKDP 33500 T**		VOLVO	32-E70-F	**VKDA 35600 T**	**VKDP 31601 T**	⚠	RENAULT
32-D82-A	**VKDC 35814 T**	**VKDP 33800 T**		BMW	32-E70-F	**VKDA 35601 T**	**VKDP 31601 T**	⚠	RENAULT
32-D82-F	**VKDC 35814 T**	**VKDP 33800 T**		BMW	32-E71-0	**VKDA 35600 T**	**VKDP 31601 T**	⚠	RENAULT
32-D83-A	**VKDC 35814 T**	**VKDP 33800 T**		BMW	32-E71-0	**VKDA 35601 T**	**VKDP 31601 T**	⚠	RENAULT
					32-E71-F	**VKDA 35600 T**	**VKDP 31601 T**	⚠	RENAULT
					32-E71-F	**VKDA 35601 T**	**VKDP 31601 T**	⚠	RENAULT
					32-E72-0	**VKDA 35601 T**	**VKDP 31601 T**		RENAULT
					32-E72-F	**VKDA 35601 T**	**VKDP 31601 T**		RENAULT
					32-E73-A	**VKDC 35613 T**	**VKDP 33601 T**		VOLVO
					32-E73-F	**VKDC 35613 T**	**VKDP 33601 T**		VOLVO
					32-E74-A	**VKDC 35613 T**	**VKDP 33601 T**		VOLVO
					32-E74-F	**VKDC 35613 T**	**VKDP 33601 T**		VOLVO
					32-E75-F	**VKDC 35613 T**	**VKDP 33601 T**		VOLVO
					32-E76-F	**VKDC 35613 T**	**VKDP 33601 T**		VOLVO
					32-E78-0	**VKDA 35113 T**	**VKDP 33101 T**		AUDI / SEAT
					32-E78-F	**VKDA 35113 T**	**VKDP 33101 T**		AUDI / SEAT
					32-E79-0	**VKDA 35110 T**	**VKDP 33100 T**	⚠	VW
					32-E79-0	**VKDA 35110 T**	**VKDP 33108 T**	⚠	VW
					32-E79-0	**VKDC 35101 T**	**VKDP 33100 T**	⚠	VW
					32-E79-0	**VKDC 35101 T**	**VKDP 33108 T**	⚠	VW

BOGE .../...

32-E80-0	**VKDA 35110 T**	**VKDP 33100 T**	⚠	VW
32-E80-0	**VKDA 35110 T**	**VKDP 33108 T**	⚠	VW
32-E80-0	**VKDC 35101 T**	**VKDP 33100 T**	⚠	VW
32-E80-0	**VKDC 35101 T**	**VKDP 33108 T**	⚠	VW
32-E82-A	**VKDC 35814 T**	**VKDP 33800 T**		BMW
32-E82-F	**VKDC 35814 T**	**VKDP 33800 T**		BMW
32-E83-F	**VKDC 35814 T**	**VKDP 33800 T**		BMW
32-E86-F	**VKDC 35814 T**	**VKDP 33800 T**		BMW
32-E87-F	**VKDC 35814 T**	**VKDP 33800 T**		BMW
32-E90-A	**VKDC 35232 T**			FIAT
32-E93-0	**VKDA 35607 T**	**VKDP 31601 T**		RENAULT
32-E93-F	**VKDA 35607 T**	**VKDP 31601 T**		RENAULT
32-E94-0	**VKDA 35607 T**	**VKDP 31601 T**		RENAULT
32-E94-F	**VKDA 35607 T**	**VKDP 31601 T**		RENAULT
32-E95-0	**VKDA 35308 T**	**VKDP 32301 T**	⚠	PEUGEOT
32-E95-0	**VKDA 35309 T**	**VKDP 32301 T**	⚠	PEUGEOT
32-E95-F	**VKDA 35308 T**	**VKDP 32301 T**	⚠	PEUGEOT
32-E95-F	**VKDA 35309 T**	**VKDP 32301 T**	⚠	PEUGEOT
32-E96-0	**VKDA 35308 T**	**VKDP 32301 T**	⚠	PEUGEOT
32-E96-0	**VKDA 35308 T**	**VKDP 33303 T**	⚠	PEUGEOT
32-E96-0	**VKDA 35308 T**	**VKDP 33306 T**	⚠	PEUGEOT
32-E96-0	**VKDA 35309 T**	**VKDP 32301 T**	⚠	PEUGEOT
32-E96-0	**VKDA 35309 T**	**VKDP 33303 T**	⚠	PEUGEOT
32-E96-0	**VKDA 35309 T**	**VKDP 33306 T**	⚠	PEUGEOT
32-E96-F	**VKDA 35308 T**	**VKDP 32301 T**	⚠	PEUGEOT
32-E96-F	**VKDA 35308 T**	**VKDP 33306 T**	⚠	PEUGEOT
32-E96-F	**VKDA 35308 T**	**VKDP 33303 T**	⚠	PEUGEOT
32-E96-F	**VKDA 35309 T**	**VKDP 32301 T**	⚠	PEUGEOT
32-E96-F	**VKDA 35309 T**	**VKDP 33306 T**	⚠	PEUGEOT
32-E96-F	**VKDA 35309 T**	**VKDP 33303 T**	⚠	PEUGEOT
32-E97-0	**VKDA 35308 T**	**VKDP 32301 T**	⚠	PEUGEOT
32-E97-0	**VKDA 35308 T**	**VKDP 33303 T**	⚠	PEUGEOT
32-E97-0	**VKDA 35308 T**	**VKDP 33306 T**	⚠	PEUGEOT
32-E97-0	**VKDA 35309 T**	**VKDP 32301 T**	⚠	PEUGEOT
32-E97-0	**VKDA 35309 T**	**VKDP 33303 T**	⚠	PEUGEOT
32-E97-0	**VKDA 35309 T**	**VKDP 33306 T**	⚠	PEUGEOT
32-E97-F	**VKDA 35308 T**	**VKDP 32301 T**	⚠	PEUGEOT
32-E97-F	**VKDA 35308 T**	**VKDP 33303 T**	⚠	PEUGEOT
32-E97-F	**VKDA 35308 T**	**VKDP 33306 T**	⚠	PEUGEOT
32-E97-F	**VKDA 35309 T**	**VKDP 32301 T**	⚠	PEUGEOT
32-E97-F	**VKDA 35309 T**	**VKDP 33303 T**	⚠	PEUGEOT
32-E97-F	**VKDA 35309 T**	**VKDP 33306 T**	⚠	PEUGEOT
32-E98-0	**VKDA 35308 T**	**VKDP 33306 T**	⚠	PEUGEOT
32-E98-0	**VKDA 35308 T**	**VKDP 33303 T**	⚠	PEUGEOT
32-E98-F	**VKDA 35308 T**	**VKDP 33303 T**	⚠	PEUGEOT
32-E98-F	**VKDA 35308 T**	**VKDP 33306 T**	⚠	PEUGEOT
32-E99-0	**VKDA 35308 T**	**VKDP 33303 T**	⚠	PEUGEOT
32-E99-0	**VKDA 35308 T**	**VKDP 33306 T**	⚠	PEUGEOT
32-E99-F	**VKDA 35308 T**	**VKDP 33303 T**	⚠	PEUGEOT
32-E99-F	**VKDA 35308 T**	**VKDP 33306 T**	⚠	PEUGEOT
32-F05-0	**VKDA 35602 T**	VKDP 31606 T		RENAULT
32-F06-0	**VKDA 35602 T**	VKDP 31606 T		RENAULT
32-F07-0	**VKDA 35319 T**	**VKDP 33308 T**		PEUGEOT
32-F07-F	**VKDA 35319 T**	**VKDP 33308 T**		PEUGEOT
32-F08-0	**VKDA 35319 T**	**VKDP 33308 T**		PEUGEOT
32-F08-F	**VKDA 35319 T**	**VKDP 33308 T**		PEUGEOT
32-F37-A	**VKDA 35520 T**	**VKDP 33403 T**		SAAB
32-F38-A	**VKDA 35520 T**	**VKDP 33403 T**		SAAB
32-F39-A	**VKDA 35520 T**	**VKDP 33403 T**		SAAB
32-F42-A	**VKDA 35508 T**	**VKDP 34500 T**		OPEL / VAUXHALL
32-F42-F	**VKDA 35508 T**	**VKDP 34500 T**		OPEL / VAUXHALL
32-F43-A	**VKDA 35508 T**	**VKDP 34500 T**		OPEL / VAUXHALL
32-F43-F	**VKDA 35508 T**	**VKDP 34500 T**		OPEL / VAUXHALL
32-F44-F	**VKDA 35508 T**	**VKDP 34500 T**		OPEL / VAUXHALL
32-F45-F	**VKDA 35508 T**	**VKDP 34500 T**		OPEL / VAUXHALL
32-F51-F	**VKDA 35110 T**	**VKDP 33111 T**	⚠	AUDI / VW
32-F51-F	**VKDA 35116 T**	**VKDP 33111 T**	⚠	AUDI / VW
32-F51-F	**VKDA 35118 T**	**VKDP 33111 T**	⚠	AUDI / VW
32-F53-A	**VKDA 35417 T**	**VKDP 33402 T**	⚠	FORD
32-F53-A	**VKDA 35425 T**	**VKDP 33402 T**	⚠	FORD
32-F53-F	**VKDA 35417 T**	**VKDP 33402 T**	⚠	FORD
32-F53-F	**VKDA 35425 T**	**VKDP 33402 T**	⚠	FORD
32-F54-A	**VKDA 35417 T**	**VKDP 33402 T**	⚠	FORD
32-F54-A	**VKDA 35425 T**	**VKDP 33402 T**	⚠	FORD
32-F54-F	**VKDA 35417 T**	**VKDP 33402 T**	⚠	FORD
32-F54-F	**VKDA 35425 T**	**VKDP 33402 T**	⚠	FORD
32-F55-F	**VKDA 35501 T**	**VKDP 33500 T**		OPEL / VAUXHALL
32-F61-A		**VKDP 93203 T**		NISSAN
32-F62-A		**VKDP 93203 T**		NISSAN
32-F69-A	**VKDA 35415 T**			FORD
32-G03-0		**VKDP 81400 T**		MAZDA
32-G04-0		**VKDP 93401 T**		MAZDA
32-G05-A	**VKDA 35220 T**		⚠	FIAT
32-G05-A	**VKDA 35221 T**		⚠	FIAT
32-G05-A	**VKDA 35225 T**		⚠	FIAT
32-G05-F	**VKDA 35220 T**		⚠	FIAT
32-G05-F	**VKDA 35221 T**		⚠	FIAT
32-G05-F	**VKDA 35225 T**		⚠	FIAT
32-G06-A	**VKDA 35508 T**	**VKDP 34500 T**		OPEL / VAUXHALL
32-G06-F	**VKDA 35508 T**	**VKDP 34500 T**		OPEL / VAUXHALL
32-G07-A	**VKDA 35508 T**	**VKDP 34500 T**		OPEL / VAUXHALL
32-G07-F	**VKDA 35508 T**	**VKDP 34500 T**		OPEL / VAUXHALL
32-G08-A		**VKDP 33111 T**		AUDI
32-G09-A		**VKDP 33111 T**		AUDI
32-G10-A		**VKDP 33111 T**		AUDI
32-G11-A		**VKDP 33111 T**		AUDI
32-G20-0	**VKDA 35115 T**	**VKDP 33100 T**		SEAT
32-G21-A	**VKDA 35115 T**	**VKDP 33100 T**		SEAT
32-G34-A	**VKDC 35232 T**			FIAT
32-G47-A	**VKDA 88203 T**		⚠	NISSAN
32-G47-A	**VKDA 88204 T**		⚠	NISSAN
32-G48-A	**VKDA 88203 T**		⚠	NISSAN
32-G48-A	**VKDA 88204 T**		⚠	NISSAN
32-G66-A	**VKDA 88404 T**			MAZDA
32-G67-A	**VKDA 88404 T**			MAZDA
32-G68-A	**VKDA 88404 T**			MAZDA
32-G69-A	**VKDA 88404 T**			MAZDA
32-H06-A	**VKDA 35313 T**	**VKDP 33311 T**		CITROËN / FIAT / PEUGEOT
32-H07-A	**VKDA 35313 T**	**VKDP 33311 T**		CITROËN / FIAT / PEUGEOT
32-H15-A	**VKDC 35232 T**			FIAT
32-H16-A	**VKDC 35232 T**			FIAT
32-H17-A	**VKDC 35232 T**			FIAT
32-H47-A	**VKDA 35623 T**	**VKDP 32601 T**		RENAULT
32-H68-A	**VKDA 40809 T**			BMW
32-H74-A	**VKDA 40300 T**			PEUGEOT
32-H74-F	**VKDA 40300 T**			PEUGEOT
32-H77-A	**VKDC 35814 T**	**VKDP 33800 T**		BMW
32-H78-A	**VKDC 35814 T**	**VKDP 33800 T**		BMW
32-H79-A	**VKDC 35814 T**	**VKDP 33800 T**		BMW
32-H80-A	**VKDC 35814 T**	**VKDP 33800 T**		BMW
32-H82-A	**VKDA 35110 T**	**VKDP 33100 T**	⚠	SEAT / VW
32-H82-A	**VKDA 35110 T**	**VKDP 33108 T**	⚠	SEAT / VW
32-H82-A	**VKDA 35110 T**	**VKDP 33107 T**	⚠	SEAT / VW
32-H82-A	**VKDA 35115 T**	**VKDP 33100 T**	⚠	SEAT / VW
32-H82-A	**VKDA 35115 T**	**VKDP 33108 T**	⚠	SEAT / VW
32-H82-A	**VKDA 35115 T**	**VKDP 33107 T**	⚠	SEAT / VW
32-H82-A	**VKDC 35101 T**	**VKDP 33100 T**	⚠	SEAT / VW
32-H82-A	**VKDC 35101 T**	**VKDP 33108 T**	⚠	SEAT / VW
32-H82-A	**VKDC 35101 T**	**VKDP 33107 T**	⚠	SEAT / VW
32-H82-A	**VKDC 35102 T**	**VKDP 33100 T**	⚠	SEAT / VW
32-H82-A	**VKDC 35102 T**	**VKDP 33108 T**	⚠	SEAT / VW

32-H82-A	**VKDC 35102 T**	**VKDP 33107 T**	⚠	SEAT / VW	36-206-0	**VKDA 35230 T**	**VKDP 33207 T**		ALFA ROMEO
32-H83-A	**VKDA 40304 T**			PEUGEOT	36-603-1	**VKD 35016 T**	**VKDP 33311 T**		CITROËN / FIAT /
32-H83-F	**VKDA 40304 T**			PEUGEOT					PEUGEOT
32-H84-A	**VKDA 40304 T**			PEUGEOT	36-612-B	**VKDA 35810 T**	**VKDP 33801 T**		MERCEDES BENZ
32-H84-F	**VKDA 40304 T**			PEUGEOT	36-612-C	**VKDA 35810 T**	**VKDP 33801 T**	⚠	MERCEDES BENZ
32-H85-A	**VKDC 35814 T**	**VKDP 33800 T**		BMW	36-612-C	**VKDA 35811 T**	**VKDP 33801 T**	⚠	MERCEDES BENZ
32-H86-A	**VKDC 35814 T**	**VKDP 33800 T**		BMW	36-613-A	**VKDC 35802 T**	**VKDP 33800 T**		BMW
32-H90-0	**VKDA 35115 T**	**VKDP 33800 T**		AUDI / SEAT /	36-613-P	**VKDC 35802 T**	**VKDP 33800 T**		BMW
				SKODA / VW	36-614-A	**VKDC 35802 T**	**VKDP 33800 T**		BMW
32-H90-F	**VKDA 35115 T**	**VKDP 33800 T**		AUDI / SEAT /	36-614-P	**VKDC 35802 T**	**VKDP 33800 T**		BMW
				SKODA / VW	36-621-A	**VKDC 35802 T**	**VKDP 33800 T**		BMW
32-H91-A	**VKDA 35115 T**	**VKDP 33800 T**		SEAT / VW	36-622-A	**VKDC 35802 T**	**VKDP 33800 T**		BMW
32-H95-A	**VKDA 35813 T**			MERCEDES BENZ	36-627-0	**VKD 35016 T**	**VKDP 33311 T**		CITROËN / FIAT /
32-J08-A	**VKDC 35613 T**	**VKDP 33601 T**		VOLVO					PEUGEOT
32-J08-F	**VKDC 35613 T**	**VKDP 33601 T**		VOLVO	36-640-A		**VKDP 33800 T**		BMW
32-J09-A	**VKDC 35613 T**	**VKDP 33601 T**		VOLVO	36-641-F	**VKDC 35802 T**	**VKDP 33800 T**		BMW
32-J09-F	**VKDC 35613 T**	**VKDP 33601 T**		VOLVO	36-642-F	**VKDC 35802 T**	**VKDP 33800 T**		BMW
32-J10-A	**VKDC 35613 T**	**VKDP 33601 T**		VOLVO	36-676-F	**VKDC 35801 T**	**VKDP 33800 T**		BMW
32-J11-A	**VKDC 35613 T**	**VKDP 33601 T**		VOLVO	36-676-P		**VKDP 33800 T**		BMW
32-J13-A	**VKDA 35316 T**			CITROËN	36-679-A		**VKDP 33800 T**		BMW
32-J13-F	**VKDA 35316 T**			CITROËN	36-681-F	**VKDC 35802 T**	**VKDP 33800 T**		BMW
32-J14-A	**VKDA 35316 T**			CITROËN	36-682-F	**VKDC 35802 T**	**VKDP 33800 T**		BMW
32-J14-F	**VKDA 35316 T**			CITROËN	36-746-A		**VKDP 33800 T**		BMW
32-J16-A	**VKDC 81504 T**			MITSUBISHI /	36-747-A	**VKDC 35801 T**	**VKDP 33800 T**		BMW
				PROTON	36-748-P	**VKDC 35801 T**	**VKDP 33800 T**		BMW
32-J17-A	**VKDC 81504 T**			MITSUBISHI /	36-769-A	**VKDC 35802 T**	**VKDP 33800 T**		BMW
				PROTON	36-769-P	**VKDC 35802 T**	**VKDP 33800 T**		BMW
33-001-A	**VKDA 35200 T**	**VKDP 83201 T**		ALFA ROMEO	36-770-A	**VKDC 35802 T**	**VKDP 33800 T**		BMW
33-002-A	**VKDA 35200 T**	**VKDP 83201 T**		ALFA ROMEO	36-770-P	**VKDC 35802 T**	**VKDP 33800 T**		BMW
33-013-A	**VKDC 35802 T**	**VKDP 33800 T**		BMW	36-771-F	**VKDC 35802 T**	**VKDP 33800 T**		BMW
33-014-A	**VKDC 35802 T**	**VKDP 33800 T**		BMW	36-772-F	**VKDC 35802 T**	**VKDP 33800 T**		BMW
33-015-F	**VKDC 35802 T**	**VKDP 33800 T**		BMW	36-A01-F	**VKDA 35603 T**	VKDP 32602 T	⚠	RENAULT
33-016-F	**VKDC 35802 T**	**VKDP 33800 T**		BMW	36-A01-F	**VKDA 35604 T**	VKDP 32602 T	⚠	RENAULT
33-067-A	**VKDA 35200 T**	**VKDP 33300 T**	⚠	FIAT	36-A02-F	**VKDA 35603 T**	VKDP 32602 T	⚠	RENAULT
33-067-A	**VKDC 35204 T**	**VKDP 33300 T**	⚠	FIAT	36-A02-F	**VKDA 35604 T**	VKDP 32602 T	⚠	RENAULT
33-074-A	**VKDA 40204 T**			ALFA ROMEO	36-A23-F	**VKD 35013 T**			FORD
33-086-F	**VKDA 35110 T**	**VKDP 33111 T**	⚠	AUDI / VW	36-A24-F	**VKD 35013 T**			FORD
33-086-F	**VKDA 35116 T**	**VKDP 33111 T**	⚠	AUDI / VW	36-A54-0	**VKDA 35230 T**	**VKDP 33207 T**		ALFA ROMEO
33-086-F	**VKDA 35118 T**	**VKDP 33111 T**	⚠	AUDI / VW	36-A57-0	**VKDA 40407 T**			FORD
33-087-F	**VKDA 35116 T**	**VKDP 33111 T**	⚠	AUDI / VW	36-A60-A	**VKDC 35814 T**		⚠	BMW
33-087-F	**VKDA 35118 T**	**VKDP 33111 T**	⚠	AUDI / VW	36-A60-A	**VKDC 35815 T**		⚠	BMW
33-116-A	**VKDA 35116 T**	**VKDP 33111 T**	⚠	AUDI / SKODA /	36-A61-A	**VKDC 35814 T**		⚠	BMW
				VW	36-A61-A	**VKDC 35815 T**		⚠	BMW
33-116-A	**VKDA 35118 T**	**VKDP 33111 T**	⚠	AUDI / SKODA /	36-A84-A	**VKD 35005 T**			MERCEDES BENZ
				VW	36-A86-A	**VKD 35005 T**			MERCEDES BENZ
33-116-F	**VKDA 35116 T**	**VKDP 33111 T**	⚠	AUDI / SKODA /	36-A88-A	**VKDA 35521 T**			SAAB
				VW	36-A89-A	**VKDA 35521 T**			SAAB
33-116-F	**VKDA 35118 T**	**VKDP 33111 T**	⚠	AUDI / SKODA /	36-A95-0		**VKDP 33802 T**		MERCEDES BENZ
				VW	36-A97-A	**VKDC 35627 T**		⚠	VOLVO
33-117-A	**VKDA 35116 T**	**VKDP 33111 T**	⚠	AUDI / SKODA /	36-A97-A	**VKDC 35634 T**		⚠	VOLVO
				VW	36-A97-F	**VKDC 35627 T**		⚠	VOLVO
33-117-A	**VKDA 35118 T**	**VKDP 33111 T**	⚠	AUDI / SKODA /	36-A97-F	**VKDC 35634 T**		⚠	VOLVO
				VW	36-B08-0	**VKDA 40809 T**			BMW
33-117-F	**VKDA 35116 T**	**VKDP 33111 T**	⚠	AUDI / SKODA /	36-B09-0	**VKDA 40809 T**			BMW
				VW	36-B10-0	**VKDA 40813 T**			BMW
33-117-F	**VKDA 35118 T**	**VKDP 33111 T**	⚠	AUDI / SKODA /	36-B11-0	**VKDA 40813 T**			BMW
				VW	36-B36-0	**VKDA 40813 T**			BMW
33-200-A	**VKDA 35118 T**	**VKDP 33111 T**		AUDI	36-B37-0	**VKDA 40813 T**			BMW
33-200-F	**VKDA 35118 T**	**VKDP 33111 T**		AUDI	36-C14-0	**VKDA 35230 T**	**VKDP 33207 T**		ALFA ROMEO
33-202-A	**VKDA 35116 T**	**VKDP 33111 T**	⚠	AUDI / SKODA /	36-C15-A	**VKDA 35402 T**			FORD
				VW	36-C16-A	**VKDA 40400 T**			FORD
33-202-A	**VKDA 35118 T**	**VKDP 33111 T**	⚠	AUDI / SKODA /	36-C17-A	**VKDA 35521 T**			SAAB
				VW	36-C18-A	**VKDA 35521 T**			SAAB
36-109-0	**VKDA 40218 T**		⚠	FIAT	36-C31-A	**VKDA 35418 T**	**VKDP 33411 T**		FORD
36-109-0	**VKDA 40219 T**		⚠	FIAT	36-C32-A	**VKDA 35418 T**	**VKDP 33411 T**		FORD
36-111-B	**VKDA 35810 T**	**VKDP 33801 T**	⚠	MERCEDES BENZ	36-C43-A	**VKDC 35801 T**	**VKDP 33800 T**		BMW
36-111-B	**VKDA 35811 T**	**VKDP 33801 T**	⚠	MERCEDES BENZ	36-C61-0	**VKDA 40616 T**			VOLVO
36-118-1	**VKDA 35201 T**			ALFA ROMEO	36-C62-0	**VKDA 40616 T**			VOLVO

BOGE .../...

36-C63-A		**VKDP 33802 T**		MERCEDES BENZ
36-C64-A		**VKDP 33802 T**		MERCEDES BENZ
36-C74-A	**VKDA 35423 T**	***VKDP 33410 T***		FORD
36-C81-A	**VKDC 35814 T**			BMW
36-C82-A	**VKDC 35814 T**			BMW
36-C83-A	**VKDC 35814 T**			BMW
36-C84-A	**VKDC 35814 T**			BMW
36-C85-A	**VKDC 35814 T**			BMW
36-C86-A	**VKDC 35814 T**			BMW
36-C87-A	**VKDC 35814 T**			BMW
36-C88-A	**VKDC 35814 T**			BMW
36-C89-A	**VKDC 35814 T**			BMW
36-C90-A	**VKDC 35814 T**			BMW
36-C91-A	**VKDC 35814 T**			BMW
36-C92-A	**VKDC 35814 T**			BMW
36-D01-A	**VKDA 35317 T**			FIAT / LANCIA
36-D02-A	**VKDA 35317 T**			FIAT / LANCIA
36-D05-A	**VKDA 35317 T**	**VKDP 33301 T**		CITROËN / FIAT / LANCIA / PEUGEOT
60-117-1	**VKDA 40101 T**	**VKDP 43100 T**		VW
60-155-0	**VKDA 40809 T**			BMW
60-166-4	**VKDA 40610 T**		⚠	VOLVO
60-166-4	***VKDA 40611 T***		⚠	VOLVO
60-182-0		**VKDP 43102 T**		VW
60-191-0		**VKDP 43102 T**		VW
60-191-4		**VKDP 43102 T**		VW
60-A05-0	**VKDA 40101 T**	**VKDP 44100 T**		VW
60-A06-0	**VKDA 40110 T**			AUDI / VW
60-A09-0	**VKDA 40121 T**	**VKDP 43102 T**	⚠	AUDI
60-A09-0	**VKDA 40121 T**	**VKDP 43104 T**	⚠	AUDI
60-A09-0	**VKDA 40122 T**	**VKDP 43102 T**	⚠	AUDI
60-A09-0	**VKDA 40122 T**	**VKDP 43104 T**	⚠	AUDI
60-A10-0	**VKDA 40121 T**	**VKDP 43102 T**	⚠	AUDI
60-A10-0	**VKDA 40121 T**	**VKDP 43104 T**	⚠	AUDI
60-A10-0	**VKDA 40122 T**	**VKDP 43102 T**	⚠	AUDI
60-A10-0	**VKDA 40122 T**	**VKDP 43104 T**	⚠	AUDI
60-A49-0	**VKDA 40104 T**	**VKDP 43106 T**		AUDI / SEAT / SKODA / VW

GABRIEL

35005	**VKDC 35207 T**			LANCIA
35006	**VKDC 35207 T**			LANCIA
35018		**VKDP 93401 T**		MAZDA
35020	**VKDA 35401 T**	**VKDP 33401 T**	⚠	FORD
35020	**VKDA 35405 T**	**VKDP 33401 T**	⚠	FORD
35022	**VKDA 35319 T**	**VKDP 33308 T**		PEUGEOT
35023	**VKDA 35319 T**	**VKDP 33308 T**		PEUGEOT
35026	**VKDA 35702 T**	**VKDP 32103 T**	⚠	SEAT
35026	**VKDA 37201 T**	**VKDP 32103 T**	⚠	SEAT
35028	**VKD 35001 T**	**VKDP 33605 T**		VOLVO
35030	**VKD 35001 T**	**VKDP 32600 T**		RENAULT
35040	**VKDC 35802 T**	**VKDP 33800 T**		BMW
35041	**VKDC 35802 T**	**VKDP 33800 T**		BMW
35044	**VKDC 35802 T**	**VKDP 33800 T**		BMW
35045	**VKDC 35802 T**	**VKDP 33800 T**		BMW
35052	**VKDA 35400 T**		⚠	FORD
35052	**VKDA 35416 T**		⚠	FORD
35053	**VKDA 35110 T**		⚠	SEAT
35053	**VKDC 35102 T**		⚠	SEAT
35056		**VKDP 93203 T**		NISSAN
35057		**VKDP 93203 T**		NISSAN
35066	**VKDA 35110 T**	**VKDP 33100 T**	⚠	SEAT / VW
35066	**VKDA 35110 T**	**VKDP 33107 T**	⚠	SEAT / VW
35066	**VKDA 35110 T**	**VKDP 33108 T**	⚠	SEAT / VW
35066	**VKDA 35115 T**	**VKDP 33100 T**	⚠	SEAT / VW
35066	**VKDA 35115 T**	**VKDP 33107 T**	⚠	SEAT / VW
35066	**VKDA 35115 T**	**VKDP 33108 T**	⚠	SEAT / VW
35066	**VKDC 35101 T**	**VKDP 33100 T**	⚠	SEAT / VW
35066	**VKDC 35101 T**	**VKDP 33107 T**	⚠	SEAT / VW
35066	**VKDC 35101 T**	**VKDP 33108 T**	⚠	SEAT / VW
35066	**VKDC 35102 T**	**VKDP 33100 T**	⚠	SEAT / VW
35066	**VKDC 35102 T**	**VKDP 33107 T**	⚠	SEAT / VW
35066	**VKDC 35102 T**	**VKDP 33108 T**	⚠	SEAT / VW
35067	**VKDA 35603 T**	VKDP 32602 T	⚠	RENAULT
35067	**VKDA 35604 T**	VKDP 32602 T	⚠	RENAULT
35067	**VKDA 35605 T**	VKDP 32602 T	⚠	RENAULT
35068	**VKDA 35603 T**	VKDP 32602 T	⚠	RENAULT
35068	**VKDA 35604 T**	VKDP 32602 T	⚠	RENAULT
35068	**VKDA 35605 T**	VKDP 32602 T	⚠	RENAULT
35071	**VKDA 35303 T**	**VKDP 33300 T**		PEUGEOT
35072	**VKDA 35303 T**	**VKDP 33300 T**		PEUGEOT
35079	**VKDA 35304 T**	**VKDP 33300 T**	⚠	PEUGEOT
35079	**VKDA 35305 T**	**VKDP 33300 T**	⚠	PEUGEOT
35083		**VKDP 31400 T**		AUTOBIANCHI / LANCIA
35084		**VKDP 31400 T**		AUTOBIANCHI / LANCIA
35093	**VKDA 88205 T**			NISSAN
35094	**VKDA 35600 T**	**VKDP 31600 T**		RENAULT
35097	**VKDA 35500 T**	**VKDP 33500 T**		OPEL / VAUXHALL
35098	**VKDA 35500 T**	**VKDP 33500 T**	⚠	OPEL / VAUXHALL
35098	**VKDA 35509 T**	**VKDP 33500 T**	⚠	OPEL / VAUXHALL
35099	**VKDA 35303 T**	**VKDP 33300 T**		CITROËN
35103	**VKDA 37201 T**	**VKDP 33800 T**		FIAT
35104	**VKDC 35203 T**	**VKDP 31200 T**		FIAT
35106	**VKDC 35203 T**	**VKDP 31200 T**		FIAT
35107	**VKDA 35403 T**	**VKDP 31400 T**		FORD
35108	**VKDA 35403 T**	**VKDP 31400 T**	⚠	FORD
35108	**VKDA 35403 T**	**VKDP 33401 T**	⚠	FORD
35108	**VKDA 35406 T**	**VKDP 31400 T**	⚠	FORD
35108	**VKDA 35406 T**	**VKDP 33401 T**	⚠	FORD
35108	**VKDA 35407 T**	**VKDP 31400 T**	⚠	FORD
35108	**VKDA 35407 T**	**VKDP 33401 T**	⚠	FORD
35110	**VKDA 35402 T**	**VKDP 33400 T**		FORD
35112	**VKDA 40400 T**	**VKDP 43403 T**		FORD
35116	**VKDA 35623 T**	**VKDP 32601 T**		RENAULT
35117	**VKDA 35623 T**	**VKDP 32601 T**		RENAULT
35118	**VKD 35001 T**			RENAULT
35119	**VKD 35001 T**			RENAULT
35127	**VKDA 35110 T**	**VKDP 33100 T**	⚠	VW
35127	**VKDA 35110 T**	**VKDP 33108 T**	⚠	VW
35127	**VKDC 35100 T**	**VKDP 33100 T**	⚠	VW
35127	**VKDC 35100 T**	**VKDP 33108 T**	⚠	VW
35127	**VKDC 35101 T**	**VKDP 33100 T**	⚠	VW
35127	**VKDC 35101 T**	**VKDP 33108 T**	⚠	VW
35142	**VKDA 35600 T**	**VKDP 31601 T**	⚠	RENAULT
35142	**VKDA 35601 T**	**VKDP 31601 T**	⚠	RENAULT
35143	**VKDA 35600 T**	**VKDP 31601 T**	⚠	RENAULT
35143	**VKDA 35601 T**	**VKDP 31601 T**	⚠	RENAULT
35145	**VKDA 35405 T**	**VKDP 33401 T**		FORD
35146	**VKDA 35405 T**	**VKDP 33401 T**		FORD
35150	**VKDA 35317 T**	**VKDP 33301 T**		CITROËN / FIAT / LANCIA / PEUGEOT
35151	**VKDA 35317 T**	**VKDP 33301 T**		CITROËN / FIAT / PEUGEOT
35153	**VKDA 35110 T**	**VKDP 33100 T**	⚠	SEAT / VW
35153	**VKDA 35110 T**	**VKDP 33107 T**	⚠	SEAT / VW
35153	**VKDA 35110 T**	**VKDP 33108 T**	⚠	SEAT / VW
35153	**VKDA 35110 T**	**VKDP 33800 T**	⚠	SEAT / VW

35153	**VKDA 35111 T**	**VKDP 33100 T**	⚠	SEAT / VW
35153	**VKDA 35111 T**	**VKDP 33107 T**	⚠	SEAT / VW
35153	**VKDA 35111 T**	**VKDP 33108 T**	⚠	SEAT / VW
35153	**VKDA 35111 T**	**VKDP 33800 T**	⚠	SEAT / VW
35153	**VKDA 35115 T**	**VKDP 33100 T**	⚠	SEAT / VW
35153	**VKDA 35115 T**	**VKDP 33107 T**	⚠	SEAT / VW
35153	**VKDA 35115 T**	**VKDP 33108 T**	⚠	SEAT / VW
35153	**VKDA 35115 T**	**VKDP 33800 T**	⚠	SEAT / VW
35153	**VKDC 35101 T**	**VKDP 33100 T**	⚠	SEAT / VW
35153	**VKDC 35101 T**	**VKDP 33107 T**	⚠	SEAT / VW
35153	**VKDC 35101 T**	**VKDP 33108 T**	⚠	SEAT / VW
35153	**VKDC 35101 T**	**VKDP 33800 T**	⚠	SEAT / VW
35153	**VKDC 35102 T**	**VKDP 33100 T**	⚠	SEAT / VW
35153	**VKDC 35102 T**	**VKDP 33107 T**	⚠	SEAT / VW
35153	**VKDC 35102 T**	**VKDP 33108 T**	⚠	SEAT / VW
35153	**VKDC 35102 T**	**VKDP 33800 T**	⚠	SEAT / VW
35153	**VKDC 35103 T**	**VKDP 33100 T**	⚠	SEAT / VW
35153	**VKDC 35103 T**	**VKDP 33107 T**	⚠	SEAT / VW
35153	**VKDC 35103 T**	**VKDP 33108 T**	⚠	SEAT / VW
35153	**VKDC 35103 T**	**VKDP 33800 T**	⚠	SEAT / VW
35163	**VKDA 35313 T**	**VKDP 33311 T**		CITROËN / FIAT / PEUGEOT
35164	**VKDA 35313 T**	**VKDP 33311 T**		CITROËN / FIAT / PEUGEOT
35166	**VKDC 35204 T**	**VKDP 33300 T**		FIAT
35167	**VKDC 35204 T**	**VKDP 33300 T**		FIAT
35177	**VKDA 35407 T**	**VKDP 33401 T**		FORD / MAZDA
35178	**VKDA 35407 T**	**VKDP 33401 T**		FORD
35179	**VKDA 35112 T**	**VKDP 33110 T**		SKODA
35181	**VKDA 35615 T**	**VKDP 32600 T**		RENAULT
35186	**VKDA 35113 T**	**VKDP 33101 T**	⚠	AUDI / SEAT / SKODA
35186	**VKDA 35122 T**	**VKDP 33101 T**	⚠	AUDI / SEAT / SKODA
35189	**VKDA 35402 T**	**VKDP 33400 T**		FORD
35190	**VKDA 35110 T**	**VKDP 33405 T**		FORD / SEAT / VW
35192	**VKDA 35508 T**	**VKDP 34500 T**	⚠	OPEL / VAUXHALL
35192	**VKDA 35509 T**	**VKDP 34500 T**	⚠	OPEL / VAUXHALL
35193	**VKDA 35312 T**	**VKDP 33308 T**	⚠	PEUGEOT
35193	**VKDA 35312 T**	**VKDP 32302 T**	⚠	PEUGEOT
35196	**VKDA 35113 T**	**VKDP 33101 T**		SEAT / SKODA / VW
35198	**VKDA 35508 T**	**VKDP 34500 T**	⚠	OPEL / VAUXHALL
35198	**VKDA 35509 T**	**VKDP 34500 T**	⚠	OPEL / VAUXHALL
35199	**VKDA 35312 T**	**VKDP 32302 T**	⚠	PEUGEOT
35199	**VKDA 35312 T**	**VKDP 33308 T**	⚠	PEUGEOT
35207	**VKDA 35508 T**	**VKDP 34500 T**	⚠	OPEL / VAUXHALL
35207	**VKDA 35509 T**	**VKDP 34500 T**	⚠	OPEL / VAUXHALL
35208	**VKDA 37203 T**			FIAT
35209	**VKDA 37203 T**			FIAT
35212	**VKDA 37203 T**			FIAT
35219	**VKDA 35508 T**	**VKDP 34500 T**	⚠	OPEL / VAUXHALL
35219	**VKDA 35509 T**	**VKDP 34500 T**	⚠	OPEL / VAUXHALL
35221	**VKDA 35503 T**	**VKDP 34500 T**	⚠	OPEL / VAUXHALL
35221	**VKDA 35503 T**	**VKDP 33501 T**	⚠	OPEL / VAUXHALL
35221	**VKDA 35508 T**	**VKDP 34500 T**	⚠	OPEL / VAUXHALL
35221	**VKDA 35508 T**	**VKDP 33501 T**	⚠	OPEL / VAUXHALL
35221	**VKDA 35515 T**	**VKDP 34500 T**	⚠	OPEL / VAUXHALL
35221	**VKDA 35515 T**	**VKDP 33501 T**	⚠	OPEL / VAUXHALL
35223	**VKDA 35308 T**	**VKDP 32301 T**	⚠	PEUGEOT
35223	**VKDA 35309 T**	**VKDP 32301 T**	⚠	PEUGEOT
35226	**VKDA 35503 T**	**VKDP 33501 T**	⚠	OPEL / VAUXHALL
35226	**VKDA 35503 T**	**VKDP 34500 T**	⚠	OPEL / VAUXHALL
35226	**VKDA 35508 T**	**VKDP 33501 T**	⚠	OPEL / VAUXHALL
35226	**VKDA 35508 T**	**VKDP 34500 T**	⚠	OPEL / VAUXHALL
35226	**VKDA 35515 T**	**VKDP 33501 T**	⚠	OPEL / VAUXHALL
35226	**VKDA 35515 T**	**VKDP 34500 T**	⚠	OPEL / VAUXHALL
35230	**VKDA 35600 T**	**VKDP 31601 T**	⚠	RENAULT
35230	**VKDA 35601 T**	**VKDP 31601 T**	⚠	RENAULT
35232	**VKDA 35607 T**	**VKDP 31601 T**		RENAULT
35234	**VKDA 35607 T**	**VKDP 31601 T**		RENAULT
35236	**VKDA 35602 T**	VKDP 31606 T		RENAULT
35237	**VKDA 35112 T**	**VKDP 33110 T**		SKODA
35279	**VKDC 35202 T**	**VKDP 33203 T**		FIAT
35281	**VKDA 35415 T**			FORD
35296	**VKDA 35417 T**	**VKDP 33402 T**	⚠	FORD
35296	**VKDA 35425 T**	**VKDP 33402 T**	⚠	FORD
35301	**VKDA 35417 T**	**VKDP 33402 T**	⚠	FORD
35301	**VKDA 35425 T**	**VKDP 33402 T**	⚠	FORD
35305	**VKD 35001 T**	**VKDP 32600 T**	⚠	RENAULT
35305	**VKDA 35615 T**	**VKDP 32600 T**	⚠	RENAULT
35315	**VKDA 35607 T**	**VKDP 31601 T**		RENAULT
35326	**VKDA 35407 T**			FORD
35327	**VKDA 35115 T**	**VKDP 33800 T**		AUDI / SKODA
35328	**VKDA 35115 T**	**VKDP 33100 T**	⚠	SEAT / SKODA / VW
35328	**VKDA 35115 T**	**VKDP 33800 T**	⚠	SEAT / SKODA / VW
35331	**VKD 35001 T**	**VKDP 32600 T**	⚠	RENAULT
35331	**VKDA 35615 T**	**VKDP 32600 T**	⚠	RENAULT
35334	**VKDA 37202 T**	**VKDP 31400 T**		FIAT
35335	**VKDA 35308 T**	**VKDP 33303 T**	⚠	PEUGEOT
35335	**VKDA 35308 T**	**VKDP 33306 T**	⚠	PEUGEOT
35335	**VKDA 35309 T**	**VKDP 33303 T**	⚠	PEUGEOT
35335	**VKDA 35309 T**	**VKDP 33306 T**	⚠	PEUGEOT
35336	**VKDA 35308 T**	**VKDP 33303 T**	⚠	PEUGEOT
35336	**VKDA 35308 T**	**VKDP 33306 T**	⚠	PEUGEOT
35336	**VKDA 35309 T**	**VKDP 33303 T**	⚠	PEUGEOT
35336	**VKDA 35309 T**	**VKDP 33306 T**	⚠	PEUGEOT
35339	**VKDA 35306 T**	**VKDP 33300 T**		CITROËN
35340	**VKDA 35306 T**	**VKDP 33300 T**		CITROËN
35341	**VKD 35002 T**	**VKDP 33300 T**	⚠	CITROËN / PEUGEOT
35341	**VKDA 35306 T**	**VKDP 33300 T**	⚠	CITROËN / PEUGEOT
35341	**VKDA 35307 T**	**VKDP 33300 T**	⚠	CITROËN / PEUGEOT
35342	**VKD 35002 T**	**VKDP 33300 T**	⚠	CITROËN / PEUGEOT
35342	**VKDA 35306 T**	**VKDP 33300 T**	⚠	CITROËN / PEUGEOT
35342	**VKDA 35307 T**	**VKDP 33300 T**	⚠	CITROËN / PEUGEOT
35343	**VKDA 35620 T**	**VKDP 32601 T**		RENAULT
35344	**VKDA 35620 T**	**VKDP 32601 T**		RENAULT
35345	**VKDA 35306 T**	**VKDP 33300 T**	⚠	CITROËN / PEUGEOT
35345	**VKDA 35307 T**	**VKDP 33300 T**	⚠	CITROËN / PEUGEOT
35346	**VKDA 35306 T**	**VKDP 33300 T**	⚠	CITROËN / PEUGEOT
35346	**VKDA 35307 T**	**VKDP 33300 T**	⚠	CITROËN / PEUGEOT
35349	**VKDA 35308 T**	**VKDP 33303 T**	⚠	PEUGEOT
35349	**VKDA 35309 T**	**VKDP 33303 T**	⚠	PEUGEOT
35350	**VKDA 35308 T**	**VKDP 33303 T**	⚠	PEUGEOT
35350	**VKDA 35309 T**	**VKDP 33303 T**	⚠	PEUGEOT
35361	**VKDA 35508 T**			VAUXHALL
35362	**VKDA 35508 T**			VAUXHALL
35365	**VKD 35005 T**			MERCEDES BENZ
35367	**VKDA 35418 T**	**VKDP 33411 T**		FORD
35369	**VKDA 35315 T**	**VKDP 33304 T**		PEUGEOT
35370	**VKDA 35315 T**	**VKDP 33304 T**		PEUGEOT
35371	**VKDA 35315 T**	**VKDP 33304 T**		PEUGEOT
35372	**VKDA 35315 T**	**VKDP 33304 T**		PEUGEOT
35375	**VKDA 35600 T**	**VKDP 31600 T**		RENAULT

GABRIEL .../...

35376	**VKDA 35600 T**	**VKDP 31600 T**		RENAULT
35377	**VKDA 35115 T**	**VKDP 33800 T**	⚠	AUDI / SEAT
35377	**VKDA 35115 T**	**VKDP 33100 T**	⚠	AUDI / SEAT
35378	**VKDA 35626 T**	**VKDP 31609 T**		RENAULT
35384	**VKDA 35619 T**	**VKDP 31602 T**		RENAULT
35385	**VKDA 35115 T**	**VKDP 33800 T**		VW
35392	**VKDA 35316 T**			CITROËN
35393	**VKDA 35316 T**			CITROËN
35394	**VKDA 35316 T**			CITROËN
35395	**VKDA 35316 T**			CITROËN
35396	**VKDA 35424 T**			FORD
35397	**VKDA 35424 T**			FORD
35401	**VKDA 35813 T**			MERCEDES BENZ
35402	**VKDA 35316 T**			CITROËN
35403	**VKDA 35316 T**			CITROËN
35416	**VKDA 35308 T**	**VKDP 33306 T**		PEUGEOT
35417	**VKDA 35308 T**	**VKDP 33306 T**		PEUGEOT
35418	**VKDA 35508 T**		⚠	OPEL / VAUXHALL
35418	**VKDA 35509 T**		⚠	OPEL / VAUXHALL
35419	**VKDA 35508 T**		⚠	OPEL / VAUXHALL
35419	**VKDA 35509 T**		⚠	OPEL / VAUXHALL
35420	**VKDA 35625 T**	**VKDP 31603 T**		RENAULT
35421	**VKDA 35625 T**	**VKDP 31603 T**		RENAULT
35422	**VKDA 35306 T**	**VKDP 33300 T**	⚠	CITROËN
35422	**VKDA 35307 T**	**VKDP 33300 T**	⚠	CITROËN
35423	**VKDA 35306 T**	**VKDP 33300 T**	⚠	CITROËN
35423	**VKDA 35307 T**	**VKDP 33300 T**	⚠	CITROËN
35431	**VKDA 35306 T**	**VKDP 33300 T**	⚠	CITROËN
35431	**VKDA 35307 T**	**VKDP 33300 T**	⚠	CITROËN
35432	**VKDA 35306 T**	**VKDP 33300 T**	⚠	CITROËN
35432	**VKDA 35307 T**	**VKDP 33300 T**	⚠	CITROËN
35813		**VKDP 31400 T**		FORD
35816	**VKDA 35403 T**	**VKDP 31400 T**	⚠	FORD
35816	**VKDA 35409 T**	**VKDP 31400 T**	⚠	FORD
35821	**VKDA 35220 T**	**VKDP 33800 T**	⚠	FIAT / SEAT
35821	**VKDA 35702 T**	**VKDP 33800 T**	⚠	FIAT / SEAT
35821	**VKDA 37201 T**	**VKDP 33800 T**	⚠	FIAT / SEAT
35822	**VKDA 37201 T**	**VKDP 31400 T**	⚠	FIAT / SEAT / ZASTAVA
35822	**VKDA 37204 T**	**VKDP 31400 T**	⚠	FIAT / SEAT / ZASTAVA
35837	**VKDA 35303 T**	**VKDP 33300 T**		CITROËN / PEUGEOT / TALBOT
35838		**VKDP 81400 T**		MAZDA
35852	**VKDA 35403 T**	**VKDP 33409 T**		FORD
35860		**VKDP 33500 T**		OPEL / VAUXHALL
35862	**VKDA 35403 T**	**VKDP 31400 T**	⚠	FORD
35862	**VKDA 35409 T**	**VKDP 31400 T**	⚠	FORD
35865	**VKDA 35303 T**			PEUGEOT
35871	**VKDA 37204 T**	**VKDP 31400 T**		FIAT
35877	**VKDA 35303 T**	**VKDP 33300 T**		CITROËN / PEUGEOT
35878	**VKDA 35702 T**	**VKDP 32103 T**	⚠	SEAT
35878	**VKDA 37201 T**	**VKDP 32103 T**	⚠	SEAT
35885	**VKDA 35303 T**	**VKDP 33300 T**		CITROËN / PEUGEOT
35886	**VKDA 35303 T**	**VKDP 33300 T**		CITROËN / PEUGEOT
35890	**VKDA 35403 T**	**VKDP 31400 T**	⚠	FORD
35890	**VKDA 35409 T**	**VKDP 31400 T**	⚠	FORD
35891	**VKDA 35403 T**	**VKDP 31400 T**	⚠	FORD
35891	**VKDA 35409 T**	**VKDP 31400 T**	⚠	FORD
35894	**VKDA 35403 T**		⚠	FORD
35894	**VKDA 35409 T**		⚠	FORD
35895	**VKDA 35403 T**	**VKDP 33409 T**		FORD
35896	**VKDA 35602 T**	VKDP 31606 T		RENAULT
35897	**VKDA 35602 T**	VKDP 31606 T		RENAULT
35903	**VKDA 35810 T**	**VKDP 33801 T**	⚠	MERCEDES BENZ
35903	**VKDA 35811 T**	**VKDP 33801 T**	⚠	MERCEDES BENZ
35908	**VKDA 35303 T**	**VKDP 33300 T**		PEUGEOT
35911	**VKDA 35400 T**	**VKDP 33405 T**	⚠	FORD
35911	**VKDA 35416 T**	**VKDP 33405 T**	⚠	FORD
35912	**VKDA 35702 T**	**VKDP 32103 T**	⚠	SEAT
35912	**VKDA 37201 T**	**VKDP 32103 T**	⚠	SEAT
35928	**VKDA 35603 T**	VKDP 32602 T		RENAULT
35931	**VKDA 35603 T**	VKDP 32602 T	⚠	RENAULT
35931	**VKDA 35604 T**	VKDP 32602 T	⚠	RENAULT
35931	**VKDA 35605 T**	VKDP 32602 T	⚠	RENAULT
35932	**VKDA 35603 T**	VKDP 32602 T	⚠	RENAULT
35932	**VKDA 35604 T**	VKDP 32602 T	⚠	RENAULT
35932	**VKDA 35605 T**	VKDP 32602 T	⚠	RENAULT
35933	**VKD 35012 T**			AUSTIN / MG / ROVER
35934	**VKD 35012 T**			AUSTIN / MG / ROVER
35939	**VKD 35016 T**	**VKDP 33311 T**		CITROËN / FIAT / PEUGEOT
35948	**VKDA 35304 T**	**VKDP 33300 T**	⚠	PEUGEOT
35948	**VKDA 35305 T**	**VKDP 33300 T**	⚠	PEUGEOT
35956	**VKDA 35510 T**	**VKDP 33501 T**	⚠	OPEL / VAUXHALL
35956	**VKDA 35510 T**	**VKDP 33504 T**	⚠	OPEL / VAUXHALL
35956	**VKDA 35511 T**	**VKDP 33501 T**	⚠	OPEL / VAUXHALL
35956	**VKDA 35511 T**	**VKDP 33504 T**	⚠	OPEL / VAUXHALL
35957	**VKDA 35602 T**	VKDP 31606 T		RENAULT
35967	**VKDA 35200 T**	**VKDP 33202 T**		FIAT
35968	**VKDA 35200 T**	**VKDP 33202 T**		FIAT / LANCIA
35972	**VKD 35016 T**	**VKDP 33311 T**		CITROËN / FIAT / PEUGEOT
35975	**VKDA 35403 T**	**VKDP 31400 T**	⚠	FORD
35975	**VKDA 35403 T**	**VKDP 33401 T**	⚠	FORD
35975	**VKDA 35406 T**	**VKDP 31400 T**	⚠	FORD
35975	**VKDA 35406 T**	**VKDP 33401 T**	⚠	FORD
35975	**VKDA 35407 T**	**VKDP 31400 T**	⚠	FORD
35975	**VKDA 35407 T**	**VKDP 33401 T**	⚠	FORD
35976	**VKDA 35403 T**	**VKDP 31400 T**		FORD
35979	**VKDA 35615 T**	**VKDP 32600 T**	⚠	RENAULT
35979	**VKDA 35616 T**	**VKDP 32600 T**	⚠	RENAULT
35980	**VKDA 35602 T**	VKDP 31606 T		RENAULT
35982	**VKDA 35702 T**	**VKDP 33800 T**	⚠	SEAT
35982	**VKDA 37201 T**	**VKDP 33800 T**	⚠	SEAT
35983	**VKDA 35112 T**	**VKDP 33203 T**		SKODA
35984	**VKDA 35403 T**			FORD
35987	**VKDA 35602 T**	VKDP 31606 T		RENAULT
35989	**VKDA 35110 T**	**VKDP 33100 T**	⚠	VW
35989	**VKDA 35110 T**	**VKDP 33108 T**	⚠	VW
35989	**VKDC 35100 T**	**VKDP 33100 T**	⚠	VW
35989	**VKDC 35100 T**	**VKDP 33108 T**	⚠	VW
35989	**VKDC 35101 T**	**VKDP 33100 T**	⚠	VW
35989	**VKDC 35101 T**	**VKDP 33108 T**	⚠	VW
35999	**VKDA 35401 T**	**VKDP 33401 T**		FORD
42476		**VKDP 43700 T**		AUDI
42519	**VKDA 40805 T**			BMW
42729	**VKDA 40407 T**			FORD
42796	**VKDA 40101 T**			SEAT / VW
42802	**VKDA 40300 T**			PEUGEOT
42813	**VKDA 40104 T**	**VKDP 43106 T**		AUDI / SEAT / SKODA / VW
42815	**VKDA 40300 T**			PEUGEOT
42828	**VKDA 40805 T**			BMW
42875	**VKDA 40104 T**	**VKDP 43106 T**		SKODA / VW
42879	**VKDA 40404 T**	**VKDP 44400 T**		FORD
42886		**VKDP 44400 T**		FORD

42893	**VKDA 40101 T**	**VKDP 43105 T**	⚠	SEAT / SKODA
42893	**VKDA 40104 T**	**VKDP 43105 T**	⚠	SEAT / SKODA
42904	**VKDA 40218 T**		⚠	FIAT
42904	**VKDA 40219 T**		⚠	FIAT
42908	**VKDA 40304 T**			PEUGEOT
42910	**VKDA 40104 T**			VW
42911	**VKDA 40104 T**	**VKDP 43106 T**		SEAT
42917	**VKDA 40304 T**			PEUGEOT
44480	**VKDA 35503 T**	**VKDP 33500 T**	⚠	OPEL / VAUXHALL
44480	**VKDA 35503 T**	**VKDP 33501 T**	⚠	OPEL / VAUXHALL
44480	**VKDA 35515 T**	**VKDP 33500 T**	⚠	OPEL / VAUXHALL
44480	**VKDA 35515 T**	**VKDP 33501 T**	⚠	OPEL / VAUXHALL
44485	**VKDA 35300 T**	**VKDP 33300 T**	⚠	CITROËN / PEUGEOT
44485	**VKDA 35300 T**	**VKDP 34303 T**	⚠	CITROËN / PEUGEOT
44485	**VKDA 35302 T**	**VKDP 33300 T**	⚠	CITROËN / PEUGEOT
44485	**VKDA 35302 T**	**VKDP 34303 T**	⚠	CITROËN / PEUGEOT
44486	**VKDA 35300 T**	**VKDP 33300 T**	⚠	CITROËN / PEUGEOT
44486	**VKDA 35300 T**	**VKDP 34303 T**	⚠	CITROËN / PEUGEOT
44486	**VKDA 35302 T**	**VKDP 33300 T**	⚠	CITROËN / PEUGEOT
44486	**VKDA 35302 T**	**VKDP 34303 T**	⚠	CITROËN / PEUGEOT
44487		**VKDP 33501 T**		OPEL / VAUXHALL
44494	**VKDA 35112 T**	**VKDP 33110 T**	⚠	SKODA
44494	**VKDA 35112 T**	**VKDP 33203 T**	⚠	SKODA
44713	**VKDC 35820 T**	**VKDP 33800 T**		BMW
44717	**VKDC 35103 T**	**VKDP 32103 T**	⚠	AUDI / VW
44717	**VKDC 35103 T**	**VKDP 33102 T**	⚠	AUDI / VW
44745	**VKDC 35801 T**	**VKDP 33800 T**		BMW
44747	**VKDC 81104 T**		⚠	TOYOTA
44747	**VKDC 81105 T**		⚠	TOYOTA
44754	**VKDC 35105 T**	**VKDP 33100 T**		VW
44774	**VKDC 35102 T**	**VKDP 33100 T**		VW
44775	**VKDC 35801 T**	**VKDP 33800 T**		BMW
44798	**VKD 35021 T**	**VKDP 33104 T**	⚠	AUDI
44798	**VKD 35023 T**	**VKDP 33104 T**	⚠	AUDI
44823	**VKDC 81104 T**			TOYOTA
44824	**VKDC 35232 T**			FIAT
44856	**VKDC 35611 T**			VOLVO
44858	**VKDA 35201 T**			ALFA ROMEO
44888		**VKDP 33800 T**		BMW
44890	**VKD 35001 T**			PEUGEOT / TALBOT
44892	**VKD 35012 T**	**VKDP 33603 T**		VOLVO
44894	**VKDC 35801 T**	**VKDP 33800 T**		BMW
44902	**VKDC 35100 T**	**VKDP 32103 T**	⚠	AUDI / VW
44902	**VKDC 35100 T**	**VKDP 33100 T**	⚠	AUDI / VW
44903	**VKDC 35504 T**	**VKDP 33500 T**	⚠	DAEWOO / OPEL / VAUXHALL
44903	**VKDC 35505 T**	**VKDP 33500 T**	⚠	DAEWOO / OPEL / VAUXHALL
44920	**VKDC 35801 T**	**VKDP 33800 T**		BMW
44924	**VKD 35005 T**	**VKDP 33500 T**	⚠	OPEL / VAUXHALL
44924	VKDA 35513 T	**VKDP 33500 T**	⚠	OPEL / VAUXHALL
44931	**VKDA 35608 T**	**VKDP 33600 T**		VOLVO
44933	**VKD 35005 T**	**VKDP 33500 T**	⚠	OPEL / VAUXHALL
44933	VKDA 35513 T	**VKDP 33500 T**	⚠	OPEL / VAUXHALL
44935	**VKDC 81104 T**		⚠	TOYOTA
44935	**VKDC 81105 T**		⚠	TOYOTA
44941	**VKDA 35608 T**	**VKDP 33600 T**		VOLVO
44948		**VKDP 33108 T**		LADA
44955	**VKD 35001 T**			PEUGEOT
44957	**VKDC 35105 T**	**VKDP 33100 T**		VW
44986	**VKDA 35110 T**	**VKDP 33100 T**	⚠	VW
44986	**VKDA 35110 T**	**VKDP 33108 T**	⚠	VW
44986	**VKDC 35100 T**	**VKDP 33100 T**	⚠	VW
44986	**VKDC 35100 T**	**VKDP 33108 T**	⚠	VW
44986	**VKDC 35101 T**	**VKDP 33100 T**	⚠	VW
44986	**VKDC 35101 T**	**VKDP 33108 T**	⚠	VW
44988	**VKDA 35501 T**	**VKDP 33500 T**		OPEL / VAUXHALL
51002		**VKDP 43101 T**		AUDI
51005	**VKDA 40102 T**	**VKDP 43102 T**		AUDI / VW
51006		**VKDP 43101 T**		VW
51013		**VKDP 43101 T**		AUDI
51017		**VKDP 43100 T**		VW
51028		**VKDP 43700 T**		AUSTIN / MG / ROVER
51033		**VKDP 43102 T**		VW
51036		**VKDP 43100 T**		SKODA
51042	**VKDA 40407 T**			FORD
51049	**VKDA 40407 T**			FORD
51051	**VKDA 40407 T**			FORD
51064	**VKDA 40113 T**	**VKDP 43101 T**		AUDI
51065	**VKDA 40600 T**	**VKDP 41600 T**		RENAULT
51081	**VKDA 40407 T**	**VKDP 43400 T**		FORD
51082	**VKDA 40407 T**	**VKDP 43400 T**		FORD
51084	**VKDA 40407 T**			FORD
51088	**VKDA 40401 T**			FORD
51089	**VKDA 40401 T**	**VKDP 43400 T**		FORD / MAZDA
51091	**VKDA 40101 T**	**VKDP 43105 T**		SEAT / VW
51097	**VKDA 35110 T**	**VKDP 33111 T**	⚠	AUDI / VW
51097	**VKDA 35116 T**	**VKDP 33111 T**	⚠	AUDI / VW
51097	**VKDA 35118 T**	**VKDP 33111 T**	⚠	AUDI / VW
51100	**VKDA 40121 T**	**VKDP 43102 T**	⚠	AUDI
51100	**VKDA 40121 T**	**VKDP 43104 T**	⚠	AUDI
51100	**VKDA 40122 T**	**VKDP 43102 T**	⚠	AUDI
51100	**VKDA 40122 T**	**VKDP 43104 T**	⚠	AUDI
51210	**VKDA 40101 T**			SEAT
51235	**VKDA 40401 T**	**VKDP 43400 T**		FORD / MAZDA
51236	**VKDA 40401 T**			FORD
51244	**VKDA 40101 T**			VW
51260	**VKDA 40101 T**	**VKDP 43103 T**		VW
51263	**VKDA 40101 T**	**VKDP 43100 T**	⚠	SEAT / VW / ZASTAVA
51263	**VKDA 40101 T**	**VKDP 44100 T**	⚠	SEAT / VW / ZASTAVA
51266	**VKDA 40101 T**	**VKDP 44100 T**		VW
51275	**VKDA 40401 T**			FORD
51277	**VKDA 35110 T**	**VKDP 33111 T**	⚠	VW
51277	**VKDA 35116 T**	**VKDP 33111 T**	⚠	VW
51277	**VKDA 35118 T**	**VKDP 33111 T**	⚠	VW
51282		**VKDP 33111 T**		AUDI
51283		**VKDP 33111 T**		AUDI
51411		**VKDP 43700 T**		AUSTIN / MG / ROVER
51420		**VKDP 43101 T**		VW
51421	**VKDA 40101 T**	**VKDP 43100 T**		VW
51425		**VKDP 93201 T**		NISSAN
55745	**VKDA 88202 T**			NISSAN
69418	**VKDA 40104 T**	**VKDP 43106 T**		SKODA / VW
69419		**VKDP 43106 T**		SKODA
69420	**VKDA 40104 T**			AUDI
69422	**VKDA 40404 T**	**VKDP 44400 T**		FORD
69437		**VKDP 44400 T**		FORD
69453	**VKDA 40101 T**	**VKDP 43105 T**	⚠	SEAT / SKODA
69453	**VKDA 40104 T**	**VKDP 43105 T**	⚠	SEAT / SKODA
69471	**VKDA 40218 T**		⚠	FIAT
69471	**VKDA 40219 T**		⚠	FIAT
69477	**VKDA 40304 T**			PEUGEOT
69487	**VKDA 40104 T**			VW

GABRIEL .../...

69488	**VKDA 40104 T**	**VKDP 43106 T**		SEAT
69495	**VKDA 40304 T**			PEUGEOT
69496	**VKDA 40304 T**			PEUGEOT
69678		**VKDP 43700 T**		AUDI
69725	**VKDA 40805 T**			BMW
69863	**VKDA 40805 T**			BMW
69901	**VKDA 40610 T**			VOLVO
69903	**VKDA 40805 T**			BMW
69911	**VKDA 40805 T**			BMW
69926	**VKDA 40300 T**			PEUGEOT
69937	**VKDA 40302 T**			PEUGEOT
69940	**VKDA 40300 T**			PEUGEOT
69945	**VKDA 40104 T**	**VKDP 43106 T**		AUDI / SEAT / SKODA / VW
69946	**VKDA 40109 T**		⚠	AUDI / VW
69946	**VKDA 40110 T**		⚠	AUDI / VW
69948	**VKDA 40805 T**			BMW
69964	**VKDA 40104 T**	**VKDP 43106 T**		AUDI / VW
G35005	**VKDC 35207 T**			LANCIA
G35006	**VKDC 35207 T**			LANCIA
G35012	**VKDA 40208 T**			FIAT / LANCIA
G35013	**VKDC 35213 T**		⚠	FIAT / LANCIA
G35013	**VKDC 35214 T**		⚠	FIAT / LANCIA
G35014	**VKDA 40208 T**			FIAT / LANCIA
G35018		**VKDP 93401 T**		MAZDA
G35020	**VKDA 35401 T**	**VKDP 33401 T**	⚠	FORD
G35020	**VKDA 35405 T**	**VKDP 33401 T**	⚠	FORD
G35022	**VKDA 35319 T**	**VKDP 33308 T**		PEUGEOT
G35023	**VKDA 35319 T**	**VKDP 33308 T**		PEUGEOT
G35026	**VKDA 35702 T**	**VKDP 32103 T**	⚠	SEAT
G35026	**VKDA 37201 T**	**VKDP 32103 T**	⚠	SEAT
G35028	**VKD 35001 T**	**VKDP 33605 T**		VOLVO
G35030	**VKD 35001 T**	**VKDP 32600 T**		RENAULT
G35037	**VKDA 35200 T**	**VKDP 83201 T**		ALFA ROMEO
G35038	**VKDA 35200 T**	**VKDP 83201 T**		ALFA ROMEO
G35040	**VKDC 35802 T**	**VKDP 33800 T**		BMW
G35041	**VKDC 35802 T**	**VKDP 33800 T**		BMW
G35042	**VKDC 35802 T**	**VKDP 33800 T**		BMW
G35043	**VKDC 35802 T**	**VKDP 33800 T**		BMW
G35044	**VKDC 35802 T**	**VKDP 33800 T**		BMW
G35045	**VKDC 35802 T**	**VKDP 33800 T**		BMW
G35046	**VKDC 35802 T**	**VKDP 33800 T**		BMW
G35047	**VKDC 35802 T**	**VKDP 33800 T**		BMW
G35049	**VKDA 35401 T**			FORD
G35052	**VKDA 35400 T**		⚠	FORD
G35052	**VKDA 35416 T**		⚠	FORD
G35053	**VKDA 35110 T**	**VKDP 33100 T**	⚠	SEAT / VW
G35053	**VKDC 35102 T**	**VKDP 33100 T**	⚠	SEAT / VW
G35056		**VKDP 93203 T**		NISSAN
G35057		**VKDP 93203 T**		NISSAN
G35063	**VKDA 35601 T**	**VKDP 31601 T**		RENAULT
G35065	**VKDA 35110 T**	**VKDP 33108 T**	⚠	SEAT / VW
G35065	**VKDA 35110 T**	**VKDP 33100 T**	⚠	SEAT / VW
G35065	**VKDA 35110 T**	**VKDP 33107 T**	⚠	SEAT / VW
G35065	**VKDA 35115 T**	**VKDP 33108 T**	⚠	SEAT / VW
G35065	**VKDA 35115 T**	**VKDP 33100 T**	⚠	SEAT / VW
G35065	**VKDA 35115 T**	**VKDP 33107 T**	⚠	SEAT / VW
G35065	**VKDC 35101 T**	**VKDP 33108 T**	⚠	SEAT / VW
G35065	**VKDC 35101 T**	**VKDP 33100 T**	⚠	SEAT / VW
G35065	**VKDC 35101 T**	**VKDP 33107 T**	⚠	SEAT / VW
G35065	**VKDC 35102 T**	**VKDP 33108 T**	⚠	SEAT / VW
G35065	**VKDC 35102 T**	**VKDP 33100 T**	⚠	SEAT / VW
G35065	**VKDC 35102 T**	**VKDP 33107 T**	⚠	SEAT / VW
G35066	**VKDA 35110 T**	**VKDP 33108 T**	⚠	SEAT / VW
G35066	**VKDA 35110 T**	**VKDP 33100 T**	⚠	SEAT / VW
G35066	**VKDA 35110 T**	**VKDP 33107 T**	⚠	SEAT / VW
G35066	**VKDA 35115 T**	**VKDP 33108 T**	⚠	SEAT / VW
G35066	**VKDA 35115 T**	**VKDP 33100 T**	⚠	SEAT / VW
G35066	**VKDA 35115 T**	**VKDP 33107 T**	⚠	SEAT / VW
G35066	**VKDC 35101 T**	**VKDP 33108 T**	⚠	SEAT / VW
G35066	**VKDC 35101 T**	**VKDP 33100 T**	⚠	SEAT / VW
G35066	**VKDC 35101 T**	**VKDP 33107 T**	⚠	SEAT / VW
G35066	**VKDC 35102 T**	**VKDP 33108 T**	⚠	SEAT / VW
G35066	**VKDC 35102 T**	**VKDP 33100 T**	⚠	SEAT / VW
G35066	**VKDC 35102 T**	**VKDP 33107 T**	⚠	SEAT / VW
G35070	**VKDC 81505 T**			HYUNDAI / MITSUBISHI
G35071	**VKDA 35303 T**	**VKDP 33300 T**		PEUGEOT
G35072	**VKDA 35303 T**	**VKDP 33300 T**		PEUGEOT
G35079	**VKDA 35304 T**	**VKDP 33300 T**	⚠	PEUGEOT
G35079	**VKDA 35305 T**	**VKDP 33300 T**	⚠	PEUGEOT
G35083		**VKDP 31400 T**		AUTOBIANCHI / LANCIA
G35084		**VKDP 31400 T**		AUTOBIANCHI / LANCIA
G35086	**VKDA 88203 T**		⚠	NISSAN
G35086	**VKDA 88204 T**		⚠	NISSAN
G35087	**VKDA 88203 T**		⚠	NISSAN
G35087	**VKDA 88204 T**		⚠	NISSAN
G35094	**VKDA 35600 T**	**VKDP 31600 T**		RENAULT
G35097	**VKDA 35500 T**	**VKDP 33500 T**		OPEL / VAUXHALL
G35098	**VKDA 35500 T**	**VKDP 33500 T**	⚠	OPEL / VAUXHALL
G35098	**VKDA 35509 T**	**VKDP 33500 T**	⚠	OPEL / VAUXHALL
G35100	**VKDA 35222 T**		⚠	ALFA ROMEO
G35100	**VKDA 35223 T**		⚠	ALFA ROMEO
G35101	**VKDA 40208 T**			ALFA ROMEO
G35103	**VKDA 37201 T**	**VKDP 33800 T**		FIAT
G35104	**VKDC 35203 T**	**VKDP 31200 T**		FIAT
G35105	**VKDC 35203 T**	**VKDP 31200 T**		FIAT
G35106	**VKDC 35203 T**	**VKDP 31200 T**		FIAT
G35107	**VKDA 35403 T**	**VKDP 31400 T**		FORD
G35108	**VKDA 35403 T**	**VKDP 31400 T**	⚠	FORD
G35108	**VKDA 35403 T**	**VKDP 33401 T**	⚠	FORD
G35108	**VKDA 35406 T**	**VKDP 31400 T**	⚠	FORD
G35108	**VKDA 35406 T**	**VKDP 33401 T**	⚠	FORD
G35108	**VKDA 35407 T**	**VKDP 31400 T**	⚠	FORD
G35108	**VKDA 35407 T**	**VKDP 33401 T**	⚠	FORD
G35110	**VKDA 35402 T**	**VKDP 33400 T**		FORD
G35112	**VKDA 40400 T**	**VKDP 43403 T**		FORD
G35114	**VKDA 35510 T**	**VKDP 33504 T**	⚠	OPEL / VAUXHALL
G35114	**VKDA 35511 T**	**VKDP 33504 T**	⚠	OPEL / VAUXHALL
G35115	**VKDA 35511 T**	**VKDP 33504 T**		OPEL / VAUXHALL
G35118	**VKD 35001 T**			RENAULT
G35119	**VKD 35001 T**			RENAULT
G35127	**VKDA 35110 T**	**VKDP 33100 T**	⚠	VW
G35127	**VKDA 35110 T**	**VKDP 33108 T**	⚠	VW
G35127	**VKDC 35100 T**	**VKDP 33100 T**	⚠	VW
G35127	**VKDC 35100 T**	**VKDP 33108 T**	⚠	VW
G35127	**VKDC 35101 T**	**VKDP 33100 T**	⚠	VW
G35127	**VKDC 35101 T**	**VKDP 33108 T**	⚠	VW
G35128	**VKDC 35634 T**	**VKDP 33500 T**		VOLVO
G35142	**VKDA 35600 T**	**VKDP 31601 T**	⚠	RENAULT
G35142	**VKDA 35601 T**	**VKDP 31601 T**	⚠	RENAULT
G35143	**VKDA 35600 T**	**VKDP 31601 T**	⚠	RENAULT
G35143	**VKDA 35601 T**	**VKDP 31601 T**	⚠	RENAULT
G35145	**VKDA 35405 T**	**VKDP 33401 T**		FORD
G35146	**VKDA 35405 T**	**VKDP 33401 T**		FORD
G35150	**VKDA 35317 T**	**VKDP 33301 T**		CITROËN / FIAT / LANCIA / PEUGEOT
G35153	**VKDA 35110 T**	**VKDP 33100 T**	⚠	SEAT / VW
G35153	**VKDA 35110 T**	**VKDP 33107 T**	⚠	SEAT / VW
G35153	**VKDA 35110 T**	**VKDP 33108 T**	⚠	SEAT / VW

							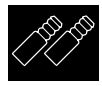		
G35153	**VKDA 35110 T**	**VKDP 33800 T**	⚠	SEAT / VW					VOLVO
G35153	**VKDA 35111 T**	**VKDP 33100 T**	⚠	SEAT / VW	G35221	**VKDA 35503 T**	**VKDP 34500 T**	⚠	OPEL / VAUXHALL
G35153	**VKDA 35111 T**	**VKDP 33107 T**	⚠	SEAT / VW	G35221	**VKDA 35503 T**	**VKDP 33501 T**	⚠	OPEL / VAUXHALL
G35153	**VKDA 35111 T**	**VKDP 33108 T**	⚠	SEAT / VW	G35221	**VKDA 35508 T**	**VKDP 34500 T**	⚠	OPEL / VAUXHALL
G35153	**VKDA 35111 T**	**VKDP 33800 T**	⚠	SEAT / VW	G35221	**VKDA 35508 T**	**VKDP 33501 T**	⚠	OPEL / VAUXHALL
G35153	**VKDA 35115 T**	**VKDP 33100 T**	⚠	SEAT / VW	G35221	**VKDA 35515 T**	**VKDP 34500 T**	⚠	OPEL / VAUXHALL
G35153	**VKDA 35115 T**	**VKDP 33107 T**	⚠	SEAT / VW	G35221	**VKDA 35515 T**	**VKDP 33501 T**	⚠	OPEL / VAUXHALL
G35153	**VKDA 35115 T**	**VKDP 33108 T**	⚠	SEAT / VW	G35222	**VKDA 40204 T**			ALFA ROMEO
G35153	**VKDA 35115 T**	**VKDP 33800 T**	⚠	SEAT / VW	G35223	**VKDA 35308 T**	**VKDP 32301 T**	⚠	PEUGEOT
G35153	**VKDC 35101 T**	**VKDP 33100 T**	⚠	SEAT / VW	G35223	**VKDA 35309 T**	**VKDP 32301 T**	⚠	PEUGEOT
G35153	**VKDC 35101 T**	**VKDP 33107 T**	⚠	SEAT / VW	G35225	**VKDC 35613 T**	**VKDP 33601 T**		MITSUBISHI / VOLVO
G35153	**VKDC 35101 T**	**VKDP 33108 T**	⚠	SEAT / VW					
G35153	**VKDC 35101 T**	**VKDP 33800 T**	⚠	SEAT / VW	G35226	**VKDA 35503 T**	**VKDP 33501 T**	⚠	OPEL / VAUXHALL
G35153	**VKDC 35102 T**	**VKDP 33100 T**	⚠	SEAT / VW	G35226	**VKDA 35503 T**	**VKDP 34500 T**	⚠	OPEL / VAUXHALL
G35153	**VKDC 35102 T**	**VKDP 33107 T**	⚠	SEAT / VW	G35226	**VKDA 35508 T**	**VKDP 33501 T**	⚠	OPEL / VAUXHALL
G35153	**VKDC 35102 T**	**VKDP 33108 T**	⚠	SEAT / VW	G35226	**VKDA 35508 T**	**VKDP 34500 T**	⚠	OPEL / VAUXHALL
G35153	**VKDC 35102 T**	**VKDP 33800 T**	⚠	SEAT / VW	G35226	**VKDA 35515 T**	**VKDP 33501 T**	⚠	OPEL / VAUXHALL
G35153	**VKDC 35103 T**	**VKDP 33100 T**	⚠	SEAT / VW	G35226	**VKDA 35515 T**	**VKDP 34500 T**	⚠	OPEL / VAUXHALL
G35153	**VKDC 35103 T**	**VKDP 33107 T**	⚠	SEAT / VW	G35228	**VKDC 35814 T**		⚠	BMW
G35153	**VKDC 35103 T**	**VKDP 33108 T**	⚠	SEAT / VW	G35228	**VKDC 35815 T**		⚠	BMW
G35153	**VKDC 35103 T**	**VKDP 33800 T**	⚠	SEAT / VW	G35230	**VKDA 35600 T**	**VKDP 31601 T**	⚠	RENAULT
G35155	**VKD 35020 T**			LANCIA	G35230	**VKDA 35601 T**	**VKDP 31601 T**	⚠	RENAULT
G35156	**VKD 35020 T**			LANCIA	G35232	**VKDA 35607 T**	**VKDP 31601 T**		RENAULT
G35158	**VKDA 35200 T**	**VKDP 83201 T**		ALFA ROMEO	G35234	**VKDA 35607 T**	**VKDP 31601 T**		RENAULT
G35159	**VKDA 35200 T**	**VKDP 83201 T**		ALFA ROMEO	G35237	**VKDA 35112 T**	**VKDP 33110 T**		SKODA
G35160	**VKDA 35200 T**	**VKDP 83201 T**		ALFA ROMEO	G35255	**VKDA 35201 T**	**VKDP 33800 T**		ALFA ROMEO
G35161	**VKDA 35201 T**	**VKDP 33800 T**		ALFA ROMEO	G35256	**VKDC 35814 T**	**VKDP 33800 T**		BMW
G35162	**VKDA 35201 T**	**VKDP 33800 T**		ALFA ROMEO	G35257	**VKDC 35613 T**	**VKDP 33601 T**		VOLVO
G35166	**VKDC 35204 T**	**VKDP 33300 T**		FIAT	G35260	**VKDA 35201 T**	**VKDP 33800 T**		ALFA ROMEO
G35167	**VKDC 35204 T**	**VKDP 33300 T**		FIAT	G35261	**VKDC 35814 T**	**VKDP 33800 T**		BMW
G35168	**VKDA 35200 T**	**VKDP 33300 T**	⚠	FIAT	G35262	**VKDC 35613 T**	**VKDP 33601 T**		VOLVO
G35168	**VKDC 35204 T**	**VKDP 33300 T**	⚠	FIAT	G35263	**VKDC 81112 T**	**VKDP 83106 T**		TOYOTA
G35171	**VKDA 35200 T**	**VKDP 33202 T**	⚠	FIAT / LANCIA	G35264		**VKDP 83201 T**		TOYOTA
G35171	**VKDC 35204 T**	**VKDP 33202 T**	⚠	FIAT / LANCIA	G35268	**VKDC 81112 T**	**VKDP 83106 T**		TOYOTA
G35172	**VKDC 35204 T**			FIAT	G35269		**VKDP 83201 T**		TOYOTA
G35173	**VKDA 35200 T**			FIAT	G35271	**VKDA 35200 T**	**VKDP 33202 T**		LANCIA
G35175	**VKDC 35203 T**			LANCIA	G35279	**VKDC 35202 T**	**VKDP 33203 T**		FIAT
G35177	**VKDA 35407 T**	**VKDP 33401 T**		FORD / MAZDA	G35280	**VKDA 40204 T**			ALFA ROMEO
G35178	**VKDA 35407 T**	**VKDP 33401 T**		FORD	G35285	**VKDA 35220 T**		⚠	FIAT
G35181	**VKDA 35615 T**	**VKDP 32600 T**		RENAULT	G35285	**VKDA 35221 T**		⚠	FIAT
G35185	**VKDA 35222 T**		⚠	ALFA ROMEO	G35286	**VKDA 35221 T**		⚠	FIAT
G35185	**VKDA 35223 T**		⚠	ALFA ROMEO	G35286	**VKDA 35225 T**		⚠	FIAT
G35186	**VKDA 35113 T**	**VKDP 33101 T**	⚠	AUDI / SEAT / SKODA / VW	G35287	**VKDA 35221 T**			FIAT
					G35288	**VKDA 40204 T**			ALFA ROMEO
G35186	**VKDA 35122 T**	**VKDP 33101 T**	⚠	AUDI / SEAT / SKODA / VW	G35289	**VKDA 35508 T**	**VKDP 34500 T**		OPEL / VAUXHALL
					G35290	**VKDA 35508 T**	**VKDP 34500 T**		OPEL / VAUXHALL
G35189	**VKDA 35402 T**	**VKDP 33400 T**		FORD	G35291	**VKDA 35113 T**			AUDI
G35190	**VKDA 35110 T**	**VKDP 33405 T**		FORD / SEAT / VW	G35292	**VKDC 35634 T**	**VKDP 33500 T**		VOLVO
G35192	**VKDA 35508 T**	**VKDP 34500 T**	⚠	OPEL / VAUXHALL	G35293	**VKDA 35402 T**			FORD
G35192	**VKDA 35509 T**	**VKDP 34500 T**	⚠	OPEL / VAUXHALL	G35294	**VKDA 40400 T**			FORD
G35193	**VKDA 35312 T**	**VKDP 33308 T**	⚠	PEUGEOT	G35295		**VKDP 33500 T**		DAEWOO
G35193	**VKDA 35312 T**	**VKDP 32302 T**	⚠	PEUGEOT	G35296	**VKDA 35417 T**	**VKDP 33402 T**	⚠	FORD
G35196	**VKDA 35113 T**	**VKDP 33101 T**		SEAT / SKODA / VW	G35296	**VKDA 35425 T**	**VKDP 33402 T**	⚠	FORD
					G35298	**VKDA 35236 T**			FIAT
G35198	**VKDA 35508 T**	**VKDP 34500 T**	⚠	OPEL / VAUXHALL	G35300		**VKDP 33500 T**		DAEWOO
G35198	**VKDA 35509 T**	**VKDP 34500 T**	⚠	OPEL / VAUXHALL	G35301	**VKDA 35417 T**	**VKDP 33402 T**	⚠	FORD
G35199	**VKDA 35312 T**	**VKDP 32302 T**	⚠	PEUGEOT	G35301	**VKDA 35425 T**	**VKDP 33402 T**	⚠	FORD
G35199	**VKDA 35312 T**	**VKDP 33308 T**	⚠	PEUGEOT	G35304	**VKD 35001 T**	**VKDP 32600 T**	⚠	RENAULT
G35203	**VKDA 35312 T**	**VKDP 33308 T**		PEUGEOT	G35304	**VKDA 35615 T**	**VKDP 32600 T**	⚠	RENAULT
G35204	**VKDA 35312 T**	**VKDP 33308 T**		PEUGEOT	G35305	**VKD 35001 T**	**VKDP 32600 T**	⚠	RENAULT
G35206	**VKDA 35407 T**			FORD	G35305	**VKDA 35615 T**	**VKDP 32600 T**	⚠	RENAULT
G35207	**VKDA 35508 T**	**VKDP 34500 T**	⚠	OPEL / VAUXHALL	G35311	**VKDC 35814 T**	**VKDP 33800 T**		BMW
G35207	**VKDA 35509 T**	**VKDP 34500 T**	⚠	OPEL / VAUXHALL	G35313	**VKDC 35814 T**	**VKDP 33800 T**		BMW
G35214	**VKDC 35232 T**			FIAT	G35317	**VKDA 35319 T**			PEUGEOT
G35218	**VKDA 35200 T**			FIAT	G35318	**VKDA 35319 T**			PEUGEOT
G35219	**VKDA 35508 T**	**VKDP 34500 T**	⚠	OPEL / VAUXHALL	G35321	**VKD 35001 T**	**VKDP 32600 T**	⚠	RENAULT
G35219	**VKDA 35509 T**	**VKDP 34500 T**	⚠	OPEL / VAUXHALL	G35321	**VKDA 35615 T**	**VKDP 32600 T**	⚠	RENAULT
G35220	**VKDC 35613 T**	**VKDP 33601 T**		MITSUBISHI /	G35326	**VKDA 35407 T**			FORD

GABRIEL .../...

G35327	**VKDA 35115 T**	**VKDP 33800 T**		AUDI / SKODA
G35328	**VKDA 35115 T**	**VKDP 33800 T**	⚠	SEAT / SKODA / VW
G35328	**VKDA 35115 T**	**VKDP 33100 T**	⚠	SEAT / SKODA / VW
G35331	**VKD 35001 T**	**VKDP 32600 T**	⚠	RENAULT
G35331	**VKDA 35615 T**	**VKDP 32600 T**	⚠	RENAULT
G35334	**VKDA 37202 T**	**VKDP 31400 T**		FIAT
G35335	**VKDA 35308 T**	**VKDP 33303 T**	⚠	PEUGEOT
G35335	**VKDA 35308 T**	**VKDP 33306 T**	⚠	PEUGEOT
G35335	**VKDA 35309 T**	**VKDP 33303 T**	⚠	PEUGEOT
G35335	**VKDA 35309 T**	**VKDP 33306 T**	⚠	PEUGEOT
G35336	**VKDA 35308 T**	**VKDP 33303 T**	⚠	PEUGEOT
G35336	**VKDA 35308 T**	**VKDP 33306 T**	⚠	PEUGEOT
G35336	**VKDA 35309 T**	**VKDP 33303 T**	⚠	PEUGEOT
G35336	**VKDA 35309 T**	**VKDP 33306 T**	⚠	PEUGEOT
G35337	**VKDA 35308 T**	**VKDP 33306 T**		PEUGEOT
G35339	**VKDA 35306 T**	**VKDP 33300 T**		CITROËN
G35340	**VKDA 35306 T**	**VKDP 33300 T**		CITROËN
G35341	**VKD 35002 T**	**VKDP 33300 T**	⚠	CITROËN / PEUGEOT
G35341	**VKDA 35306 T**	**VKDP 33300 T**	⚠	CITROËN / PEUGEOT
G35341	**VKDA 35307 T**	**VKDP 33300 T**	⚠	CITROËN / PEUGEOT
G35342	**VKD 35002 T**	**VKDP 33300 T**	⚠	CITROËN / PEUGEOT
G35342	**VKDA 35306 T**	**VKDP 33300 T**	⚠	CITROËN / PEUGEOT
G35342	**VKDA 35307 T**	**VKDP 33300 T**	⚠	CITROËN / PEUGEOT
G35343	**VKDA 35620 T**	**VKDP 32601 T**		RENAULT
G35344	**VKDA 35620 T**	**VKDP 32601 T**		RENAULT
G35345	**VKDA 35306 T**	**VKDP 33300 T**	⚠	CITROËN / PEUGEOT
G35345	**VKDA 35307 T**	**VKDP 33300 T**	⚠	CITROËN / PEUGEOT
G35346	**VKDA 35306 T**	**VKDP 33300 T**	⚠	CITROËN / PEUGEOT
G35346	**VKDA 35307 T**	**VKDP 33300 T**	⚠	CITROËN / PEUGEOT
G35347	**VKD 35002 T**	**VKDP 33300 T**	⚠	CITROËN / PEUGEOT
G35347	**VKDA 35306 T**	**VKDP 33300 T**	⚠	CITROËN / PEUGEOT
G35347	**VKDA 35307 T**	**VKDP 33300 T**	⚠	CITROËN / PEUGEOT
G35348	**VKD 35002 T**	**VKDP 33300 T**	⚠	CITROËN / PEUGEOT
G35348	**VKDA 35306 T**	**VKDP 33300 T**	⚠	CITROËN / PEUGEOT
G35348	**VKDA 35307 T**	**VKDP 33300 T**	⚠	CITROËN / PEUGEOT
G35349	**VKDA 35308 T**	**VKDP 33303 T**	⚠	PEUGEOT
G35349	**VKDA 35309 T**	**VKDP 33303 T**	⚠	PEUGEOT
G35350	**VKDA 35308 T**	**VKDP 33303 T**	⚠	PEUGEOT
G35350	**VKDA 35309 T**	**VKDP 33303 T**	⚠	PEUGEOT
G35361	**VKDA 35508 T**			VAUXHALL
G35362	**VKDA 35508 T**			VAUXHALL
G35365	**VKD 35005 T**			MERCEDES BENZ
G35367	**VKDA 35418 T**	**VKDP 33411 T**		FORD
G35369	**VKDA 35315 T**	**VKDP 33304 T**		PEUGEOT
G35370	**VKDA 35315 T**	**VKDP 33304 T**		PEUGEOT
G35371	**VKDA 35315 T**	**VKDP 33304 T**		PEUGEOT
G35372	**VKDA 35315 T**	**VKDP 33304 T**		PEUGEOT
G35375	**VKDA 35600 T**	**VKDP 31600 T**		RENAULT
G35376	**VKDA 35600 T**	**VKDP 31600 T**		RENAULT
G35377	**VKDA 35115 T**	**VKDP 33100 T**	⚠	AUDI / SEAT
G35377	**VKDA 35115 T**	**VKDP 33800 T**	⚠	AUDI / SEAT
G35379	**VKDA 35622 T**			RENAULT
G35381	**VKDA 35626 T**	**VKDP 31609 T**		RENAULT
G35382	**VKD 35001 T**			RENAULT
G35385	**VKDA 35115 T**	**VKDP 33800 T**		VW
G35387	**VKDA 35521 T**			SAAB
G35388	**VKDA 35521 T**			SAAB
G35392	**VKDA 35316 T**			CITROËN
G35393	**VKDA 35316 T**			CITROËN
G35394	**VKDA 35316 T**			CITROËN
G35395	**VKDA 35316 T**			CITROËN
G35396	**VKDA 35424 T**			FORD
G35397	**VKDA 35424 T**			FORD
G35401	**VKDA 35813 T**			MERCEDES BENZ
G35402	**VKDA 35316 T**			CITROËN
G35403	**VKDA 35316 T**			CITROËN
G35404	**VKDC 35613 T**	**VKDP 33601 T**		VOLVO
G35405	**VKDC 35613 T**	**VKDP 33601 T**		VOLVO
G35406	**VKDC 35613 T**	**VKDP 33601 T**		VOLVO
G35407	**VKDC 35613 T**	**VKDP 33601 T**		VOLVO
G35408	**VKDC 35613 T**	**VKDP 33601 T**		VOLVO
G35409	**VKDC 35613 T**	**VKDP 33601 T**		VOLVO
G35412	**VKDA 35308 T**	**VKDP 33306 T**		PEUGEOT
G35413	**VKDA 35308 T**	**VKDP 33306 T**		PEUGEOT
G35416	**VKDA 35308 T**	**VKDP 33306 T**		PEUGEOT
G35417	**VKDA 35308 T**	**VKDP 33306 T**		PEUGEOT
G35418	**VKDA 35508 T**		⚠	OPEL / VAUXHALL
G35418	**VKDA 35509 T**		⚠	OPEL / VAUXHALL
G35419	**VKDA 35508 T**		⚠	OPEL / VAUXHALL
G35419	**VKDA 35509 T**		⚠	OPEL / VAUXHALL
G35420	**VKDA 35625 T**	**VKDP 31603 T**		RENAULT
G35421	**VKDA 35625 T**	**VKDP 31603 T**		RENAULT
G35422	**VKDA 35306 T**	**VKDP 33300 T**	⚠	CITROËN
G35422	**VKDA 35307 T**	**VKDP 33300 T**	⚠	CITROËN
G35423	**VKDA 35306 T**	**VKDP 33300 T**	⚠	CITROËN
G35423	**VKDA 35307 T**	**VKDP 33300 T**	⚠	CITROËN
G35428	**VKDA 35306 T**	**VKDP 33300 T**	⚠	CITROËN
G35428	**VKDA 35307 T**	**VKDP 33300 T**	⚠	CITROËN
G35429	**VKDA 35306 T**	**VKDP 33300 T**	⚠	CITROËN
G35429	**VKDA 35307 T**	**VKDP 33300 T**	⚠	CITROËN
G35431	**VKDA 35306 T**	**VKDP 33300 T**	⚠	CITROËN
G35431	**VKDA 35307 T**	**VKDP 33300 T**	⚠	CITROËN
G35432	**VKDA 35306 T**	**VKDP 33300 T**	⚠	CITROËN
G35432	**VKDA 35307 T**	**VKDP 33300 T**	⚠	CITROËN
G35435	**VKDC 35613 T**	**VKDP 33601 T**		VOLVO
G35436	**VKDC 35613 T**	**VKDP 33601 T**		VOLVO
G35437	**VKDC 35613 T**	**VKDP 33601 T**		VOLVO
G35438	**VKDC 35613 T**	**VKDP 33601 T**		VOLVO
G35813		**VKDP 31400 T**		FORD
G35816	**VKDA 35403 T**	**VKDP 31400 T**	⚠	FORD
G35816	**VKDA 35409 T**	**VKDP 31400 T**	⚠	FORD
G35821	**VKDA 35220 T**	**VKDP 33800 T**	⚠	FIAT / SEAT
G35821	**VKDA 35702 T**	**VKDP 33800 T**	⚠	FIAT / SEAT
G35821	**VKDA 37201 T**	**VKDP 33800 T**	⚠	FIAT / SEAT
G35822	**VKDA 37201 T**	**VKDP 31400 T**	⚠	FIAT / SEAT
G35822	**VKDA 37204 T**	**VKDP 31400 T**	⚠	FIAT / SEAT
G35837	**VKDA 35303 T**	**VKDP 33300 T**		CITROËN / PEUGEOT / TALBOT
G35838		**VKDP 81400 T**		MAZDA
G35852	**VKDA 35403 T**	**VKDP 33409 T**		FORD
G35858		**VKDP 84402 T**		MAZDA
G35859		**VKDP 93402 T**		MAZDA
G35860		**VKDP 33500 T**		OPEL / VAUXHALL
G35862	**VKDA 35403 T**	**VKDP 31400 T**	⚠	FORD

G35862	**VKDA 35409 T**	**VKDP 31400 T**	⚠	FORD
G35863		**VKDP 31400 T**		FORD
G35865	**VKDA 35303 T**			PEUGEOT
G35871	**VKDA 37204 T**	**VKDP 31400 T**		FIAT
G35875	**VKDA 35403 T**	**VKDP 31400 T**	⚠	FORD
G35875	**VKDA 35409 T**	**VKDP 31400 T**	⚠	FORD
G35877	**VKDA 35303 T**	**VKDP 33300 T**		CITROËN / PEUGEOT
G35885	**VKDA 35303 T**	**VKDP 33300 T**		CITROËN / PEUGEOT
G35886	**VKDA 35303 T**	**VKDP 33300 T**		CITROËN / PEUGEOT
G35890	**VKDA 35403 T**	**VKDP 31400 T**	⚠	FORD
G35890	**VKDA 35409 T**	**VKDP 31400 T**	⚠	FORD
G35891	**VKDA 35403 T**	**VKDP 31400 T**	⚠	FORD
G35891	**VKDA 35409 T**	**VKDP 31400 T**	⚠	FORD
G35895	**VKDA 35403 T**	**VKDP 33409 T**		FORD
G35896	**VKDA 35602 T**	VKDP 31606 T		RENAULT
G35903	**VKDA 35810 T**	**VKDP 33801 T**	⚠	MERCEDES BENZ
G35903	**VKDA 35811 T**	**VKDP 33801 T**	⚠	MERCEDES BENZ
G35908	**VKDA 35303 T**	**VKDP 33300 T**		PEUGEOT
G35911	**VKDA 35400 T**	**VKDP 33405 T**	⚠	FORD
G35911	**VKDA 35416 T**	**VKDP 33405 T**	⚠	FORD
G35912	**VKDA 35702 T**	**VKDP 32103 T**	⚠	SEAT
G35912	**VKDA 37201 T**	**VKDP 32103 T**	⚠	SEAT
G35928	**VKDA 35603 T**	VKDP 32602 T		RENAULT
G35933	**VKD 35012 T**			AUSTIN / MG / ROVER
G35934	**VKD 35012 T**			AUSTIN / MG / ROVER
G35948	**VKDA 35304 T**	**VKDP 33300 T**	⚠	PEUGEOT
G35948	**VKDA 35305 T**	**VKDP 33300 T**	⚠	PEUGEOT
G35956	**VKDA 35510 T**	**VKDP 33501 T**	⚠	OPEL / VAUXHALL
G35956	**VKDA 35510 T**	**VKDP 33504 T**	⚠	OPEL / VAUXHALL
G35956	**VKDA 35511 T**	**VKDP 33501 T**	⚠	OPEL / VAUXHALL
G35956	**VKDA 35511 T**	**VKDP 33504 T**	⚠	OPEL / VAUXHALL
G35963	**VKDA 35201 T**	**VKDP 33800 T**		ALFA ROMEO
G35964	**VKDA 35201 T**	**VKDP 33800 T**		ALFA ROMEO
G35967	**VKDA 35200 T**	**VKDP 33202 T**		FIAT
G35968	**VKDA 35200 T**	**VKDP 33202 T**		FIAT / LANCIA
G35975	**VKDA 35403 T**	**VKDP 31400 T**	⚠	FORD
G35975	**VKDA 35403 T**	**VKDP 33401 T**	⚠	FORD
G35975	**VKDA 35406 T**	**VKDP 31400 T**	⚠	FORD
G35975	**VKDA 35406 T**	**VKDP 33401 T**	⚠	FORD
G35975	**VKDA 35407 T**	**VKDP 31400 T**	⚠	FORD
G35975	**VKDA 35407 T**	**VKDP 33401 T**	⚠	FORD
G35976	**VKDA 35403 T**	**VKDP 31400 T**		FORD
G35979	**VKDA 35615 T**	**VKDP 32600 T**	⚠	RENAULT
G35979	**VKDA 35616 T**	**VKDP 32600 T**	⚠	RENAULT
G35982	**VKDA 35702 T**	**VKDP 33800 T**	⚠	SEAT
G35982	**VKDA 37201 T**	**VKDP 33800 T**	⚠	SEAT
G35983	**VKDA 35112 T**	**VKDP 33203 T**		SKODA
G35989	**VKDA 35110 T**	**VKDP 33100 T**	⚠	VW
G35989	**VKDA 35110 T**	**VKDP 33108 T**	⚠	VW
G35989	**VKDC 35100 T**	**VKDP 33100 T**	⚠	VW
G35989	**VKDC 35100 T**	**VKDP 33108 T**	⚠	VW
G35989	**VKDC 35101 T**	**VKDP 33100 T**	⚠	VW
G35989	**VKDC 35101 T**	**VKDP 33108 T**	⚠	VW
G35990	**VKDA 35510 T**	**VKDP 33504 T**	⚠	OPEL / VAUXHALL
G35990	**VKDA 35511 T**	**VKDP 33504 T**	⚠	OPEL / VAUXHALL
G35996	**VKDA 35306 T**	**VKDP 33300 T**	⚠	CITROËN
G35996	**VKDA 35307 T**	**VKDP 33300 T**	⚠	CITROËN
G35997	**VKDA 35306 T**	**VKDP 33300 T**	⚠	CITROËN
G35997	**VKDA 35307 T**	**VKDP 33300 T**	⚠	CITROËN
G35999	**VKDA 35401 T**	**VKDP 31400 T**	⚠	FORD
G35999	**VKDA 35401 T**	**VKDP 33401 T**	⚠	FORD
G44460	**VKDC 35801 T**	**VKDP 33800 T**		BMW
G44461	**VKD 35032 T**	**VKDP 33403 T**	⚠	SAAB
G44461	**VKD 35032 T**	**VKDP 33406 T**	⚠	SAAB
G44461	**VKDA 35520 T**	**VKDP 33403 T**	⚠	SAAB
G44461	**VKDA 35520 T**	**VKDP 33406 T**	⚠	SAAB
G44480	**VKDA 35503 T**	**VKDP 33501 T**	⚠	OPEL / VAUXHALL
G44480	**VKDA 35503 T**	**VKDP 33500 T**	⚠	OPEL / VAUXHALL
G44480	**VKDA 35515 T**	**VKDP 33501 T**	⚠	OPEL / VAUXHALL
G44480	**VKDA 35515 T**	**VKDP 33500 T**	⚠	OPEL / VAUXHALL
G44480	**VKDC 35504 T**	**VKDP 33501 T**	⚠	OPEL / VAUXHALL
G44480	**VKDC 35504 T**	**VKDP 33500 T**	⚠	OPEL / VAUXHALL
G44480	**VKDC 35505 T**	**VKDP 33501 T**	⚠	OPEL / VAUXHALL
G44480	**VKDC 35505 T**	**VKDP 33500 T**	⚠	OPEL / VAUXHALL
G44485	**VKDA 35300 T**	**VKDP 34303 T**	⚠	CITROËN / PEUGEOT
G44485	**VKDA 35300 T**	**VKDP 33300 T**	⚠	CITROËN / PEUGEOT
G44485	**VKDA 35302 T**	**VKDP 34303 T**	⚠	CITROËN / PEUGEOT
G44485	**VKDA 35302 T**	**VKDP 33300 T**	⚠	CITROËN / PEUGEOT
G44486	**VKDA 35300 T**	**VKDP 33300 T**	⚠	CITROËN / PEUGEOT
G44486	**VKDA 35300 T**	**VKDP 34303 T**	⚠	CITROËN / PEUGEOT
G44486	**VKDA 35302 T**	**VKDP 33300 T**	⚠	CITROËN / PEUGEOT
G44486	**VKDA 35302 T**	**VKDP 34303 T**	⚠	CITROËN / PEUGEOT
G44487		**VKDP 33501 T**		OPEL / VAUXHALL
G44493	**VKDC 35801 T**	**VKDP 33800 T**		BMW
G44495	**VKD 35032 T**	**VKDP 33403 T**	⚠	SAAB
G44495	**VKD 35032 T**	**VKDP 33406 T**	⚠	SAAB
G44495	**VKDA 35520 T**	**VKDP 33403 T**	⚠	SAAB
G44495	**VKDA 35520 T**	**VKDP 33406 T**	⚠	SAAB
G44497	**VKDC 35801 T**	**VKDP 33800 T**		BMW
G44498		**VKDP 33800 T**		BMW
G44713	**VKDC 35820 T**	**VKDP 33800 T**		BMW
G44717	**VKDC 35103 T**	**VKDP 32103 T**	⚠	AUDI / VW
G44717	**VKDC 35103 T**	**VKDP 33102 T**	⚠	AUDI / VW
G44745	**VKDC 35801 T**	**VKDP 33800 T**		BMW
G44747	**VKDC 81104 T**		⚠	TOYOTA
G44747	**VKDC 81105 T**		⚠	TOYOTA
G44754	**VKDC 35105 T**	**VKDP 33100 T**		VW
G44774	**VKDA 35110 T**	**VKDP 33100 T**	⚠	VW
G44774	**VKDC 35101 T**	**VKDP 33100 T**	⚠	VW
G44774	**VKDC 35102 T**	**VKDP 33100 T**	⚠	VW
G44775	**VKDC 35801 T**	**VKDP 33800 T**		BMW
G44777	**VKDC 35102 T**	**VKDP 33100 T**		VW
G44779	**VKD 35001 T**			PEUGEOT
G44798	**VKD 35021 T**	**VKDP 33104 T**	⚠	AUDI
G44798	**VKD 35023 T**	**VKDP 33104 T**	⚠	AUDI
G44823	**VKDC 81104 T**			TOYOTA
G44824	**VKDC 35232 T**			FIAT
G44856	**VKDC 35611 T**			VOLVO
G44888		**VKDP 33800 T**		BMW
G44890	**VKD 35001 T**			PEUGEOT / TALBOT
G44892	**VKD 35012 T**	**VKDP 33603 T**		VOLVO
G44894	**VKDC 35801 T**	**VKDP 33800 T**		BMW
G44902	**VKDC 35100 T**	**VKDP 32103 T**	⚠	AUDI / VW
G44902	**VKDC 35100 T**	**VKDP 33100 T**	⚠	AUDI / VW
G44903	**VKDC 35504 T**	**VKDP 33500 T**	⚠	DEAWOO / OPEL / VAUXHALL
G44903	**VKDC 35505 T**	**VKDP 33500 T**	⚠	DEAWOO / OPEL / VAUXHALL
G44920	**VKDC 35801 T**	**VKDP 33800 T**		BMW
G44924	**VKD 35005 T**	**VKDP 33500 T**	⚠	OPEL / VAUXHALL
G44924	VKDA 35513 T	**VKDP 33500 T**	⚠	OPEL / VAUXHALL
G44931	**VKDA 35608 T**	**VKDP 33600 T**		VOLVO

GABRIEL .../...

G44933	**VKD 35005 T**	**VKDP 33500 T**	⚠	OPEL / VAUXHALL
G44933	VKDA 35513 T	**VKDP 33500 T**	⚠	OPEL / VAUXHALL
G44939	**VKDC 81104 T**		⚠	TOYOTA
G44939	**VKDC 81105 T**		⚠	TOYOTA
G44940	**VKDC 81105 T**			TOYOTA
G44941	**VKDA 35608 T**	**VKDP 33600 T**		VOLVO
G44948		**VKDP 33108 T**		LADA
G44955	**VKD 35001 T**			PEUGEOT
G44969		**VKDP 33800 T**		BMW
G44982	**VKDC 81102 T**		⚠	TOYOTA
G44982	**VKDC 81104 T**		⚠	TOYOTA
G44986	**VKDA 35110 T**	**VKDP 33100 T**	⚠	VW
G44986	**VKDA 35110 T**	**VKDP 33108 T**	⚠	VW
G44986	**VKDC 35100 T**	**VKDP 33100 T**	⚠	VW
G44986	**VKDC 35100 T**	**VKDP 33108 T**	⚠	VW
G44986	**VKDC 35101 T**	**VKDP 33100 T**	⚠	VW
G44986	**VKDC 35101 T**	**VKDP 33108 T**	⚠	VW
G44988	**VKDA 35501 T**	**VKDP 33500 T**		OPEL / VAUXHALL
G44989		**VKDP 33800 T**		BMW
G44991	**VKDC 35801 T**	**VKDP 33800 T**		BMW
G51005	**VKDA 40102 T**	**VKDP 43102 T**		AUDI / VW
G51006		**VKDP 43101 T**		VW
G51007		**VKDP 43101 T**		BMW
G51013		**VKDP 43101 T**		AUDI
G51017		**VKDP 43100 T**		VW
G51028		**VKDP 43700 T**		AUSTIN / MG / ROVER
G51033		**VKDP 43102 T**		VW
G51035		**VKDP 43101 T**		AUDI
G51042	**VKDA 40407 T**			FORD
G51049	**VKDA 40407 T**			FORD
G51051	**VKDA 40407 T**			FORD
G51064	**VKDA 40113 T**	**VKDP 43101 T**		AUDI
G51065	**VKDA 40600 T**	**VKDP 41600 T**		RENAULT
G51066	**VKDA 40407 T**			FORD
G51081	**VKDA 40407 T**	**VKDP 43400 T**		FORD
G51082	**VKDA 40407 T**	**VKDP 43400 T**		FORD
G51084	**VKDA 40407 T**			FORD
G51088	**VKDA 40401 T**			FORD
G51089	**VKDA 40401 T**	**VKDP 43400 T**		FORD / MAZDA
G51091	**VKDA 40101 T**	**VKDP 43105 T**		SEAT / VW
G51097	**VKDA 35110 T**	**VKDP 33111 T**	⚠	AUDI / VW
G51097	**VKDA 35116 T**	**VKDP 33111 T**	⚠	AUDI / VW
G51097	**VKDA 35118 T**	**VKDP 33111 T**	⚠	AUDI / VW
G51099	**VKDA 35110 T**	**VKDP 33111 T**	⚠	AUDI / VW
G51099	**VKDA 35116 T**	**VKDP 33111 T**	⚠	AUDI / VW
G51099	**VKDA 35118 T**	**VKDP 33111 T**	⚠	AUDI / VW
G51100	**VKDA 40121 T**	**VKDP 43104 T**	⚠	AUDI
G51100	**VKDA 40121 T**	**VKDP 43102 T**	⚠	AUDI
G51100	**VKDA 40122 T**	**VKDP 43104 T**	⚠	AUDI
G51100	**VKDA 40122 T**	**VKDP 43102 T**	⚠	AUDI
G51101	**VKDA 35118 T**	**VKDP 33111 T**		AUDI
G51192		**VKDP 43400 T**		MAZDA
G51201	**VKDA 40407 T**			FORD
G51206	**VKDA 40101 T**	**VKDP 43100 T**	⚠	VW
G51206	**VKDA 40101 T**	**VKDP 43102 T**	⚠	VW
G51217	**VKDA 35230 T**	**VKDP 33207 T**		ALFA ROMEO
G51231	**VKDA 35230 T**	**VKDP 33207 T**		ALFA ROMEO
G51235	**VKDA 40401 T**	**VKDP 43400 T**		FORD / MAZDA
G51236	**VKDA 40401 T**			FORD
G51238	**VKDA 35230 T**			ALFA ROMEO
G51244	**VKDA 40101 T**			VW
G51260	**VKDA 40101 T**	**VKDP 43103 T**		VW
G51263	**VKDA 40101 T**	**VKDP 43100 T**	⚠	SEAT / VW
G51263	**VKDA 40101 T**	**VKDP 44100 T**	⚠	SEAT / VW
G51266	**VKDA 40101 T**	**VKDP 44100 T**		VW
G51275	**VKDA 40401 T**			FORD
G51277	**VKDA 35110 T**	**VKDP 33111 T**	⚠	VW
G51277	**VKDA 35116 T**	**VKDP 33111 T**	⚠	VW
G51277	**VKDA 35118 T**	**VKDP 33111 T**	⚠	VW
G51278	**VKDA 35110 T**	**VKDP 33111 T**	⚠	VW
G51278	**VKDA 35116 T**	**VKDP 33111 T**	⚠	VW
G51278	**VKDA 35118 T**	**VKDP 33111 T**	⚠	VW
G51282		**VKDP 33111 T**		AUDI
G51283		**VKDP 33111 T**		AUDI
G51284		**VKDP 33111 T**		AUDI
G51285		**VKDP 33111 T**		AUDI
G51346	**VKDA 40809 T**			BMW
G51411		**VKDP 43700 T**		AUSTIN / MG / ROVER
G51423		**VKDP 43400 T**		MAZDA
G55521	**VKDC 81201 T**			NISSAN
G55531		**VKDP 81505 T**		MITSUBISHI
G55552	**VKDC 35420 T**			SAAB
G55561	**VKDA 81501 T**	**VKDP 81505 T**	⚠	MITSUBISHI
G55561	**VKDA 81501 T**	**VKDP 83502 T**	⚠	MITSUBISHI
G55561	**VKDA 81502 T**	**VKDP 81505 T**	⚠	MITSUBISHI
G55561	**VKDA 81502 T**	**VKDP 83502 T**	⚠	MITSUBISHI
G55584	**VKDC 35420 T**	**VKDP 33408 T**		SAAB
G55586		**VKDP 33401 T**		HYUNDAI
G55592	**VKDC 81503 T**	**VKDP 83503 T**		HYUNDAI / MITSUBISHI
G55595		**VKDP 81400 T**		MAZDA
G55596		**VKDP 81400 T**		MAZDA
G55597		**VKDP 93401 T**		MAZDA
G55598		**VKDP 93401 T**		MAZDA
G55600		**VKDP 84401 T**		MAZDA
G55615	**VKDA 88401 T**			KIA / MAZDA
G55713		**VKDP 83201 T**		NISSAN
G55716	**VKDA 81501 T**	**VKDP 83502 T**	⚠	MITSUBISHI
G55716	**VKDA 81501 T**	**VKDP 81505 T**	⚠	MITSUBISHI
G55716	**VKDA 81502 T**	**VKDP 83502 T**	⚠	MITSUBISHI
G55716	**VKDA 81502 T**	**VKDP 81505 T**	⚠	MITSUBISHI
G55745	**VKDA 88202 T**			NISSAN
G55961	**VKDA 88203 T**			NISSAN
G55962	**VKDA 88203 T**			NISSAN
G55999	**VKDC 81103 T**			TOYOTA

KYB

241003		**VKDP 43101 T**		BMW
243019	**VKDA 40805 T**			BMW
243034	**VKDA 40407 T**			FORD
243037	**VKDA 40104 T**	**VKDP 43106 T**		AUDI / SKODA / VW
243039	**VKDA 40104 T**	**VKDP 43106 T**		SEAT
322024	**VKDA 88202 T**			NISSAN
322025	**VKDA 88202 T**			NISSAN
323024	**VKDA 35403 T**	**VKDP 31400 T**	⚠	FORD
323024	**VKDA 35409 T**	**VKDP 31400 T**	⚠	FORD
323032	**VKDA 88203 T**		⚠	NISSAN
323032	**VKDA 88204 T**		⚠	NISSAN
323033	**VKDA 88203 T**		⚠	NISSAN
323033	**VKDA 88204 T**		⚠	NISSAN
323034	**VKDA 35500 T**	**VKDP 33500 T**		OPEL / VAUXHALL
323035	**VKDA 37202 T**	**VKDP 31400 T**		FIAT
323037	**VKDA 35403 T**	**VKDP 33409 T**		FORD
323054	**VKDA 35308 T**	**VKDP 33306 T**	⚠	PEUGEOT
323054	**VKDA 35308 T**	**VKDP 32301 T**	⚠	PEUGEOT
323054	**VKDA 35308 T**	**VKDP 33303 T**	⚠	PEUGEOT
323054	**VKDA 35309 T**	**VKDP 33306 T**	⚠	PEUGEOT
323054	**VKDA 35309 T**	**VKDP 32301 T**	⚠	PEUGEOT

323054	**VKDA 35309 T**	**VKDP 33303 T**	⚠	PEUGEOT
323055	**VKDA 35308 T**	**VKDP 33306 T**	⚠	PEUGEOT
323055	**VKDA 35308 T**	**VKDP 32301 T**	⚠	PEUGEOT
323055	**VKDA 35308 T**	**VKDP 33303 T**	⚠	PEUGEOT
323055	**VKDA 35309 T**	**VKDP 33306 T**	⚠	PEUGEOT
323055	**VKDA 35309 T**	**VKDP 32301 T**	⚠	PEUGEOT
323055	**VKDA 35309 T**	**VKDP 33303 T**	⚠	PEUGEOT
323056	**VKDA 35417 T**	**VKDP 33402 T**	⚠	FORD
323056	**VKDA 35425 T**	**VKDP 33402 T**	⚠	FORD
323057	**VKDA 35417 T**	**VKDP 33402 T**	⚠	FORD
323057	**VKDA 35425 T**	**VKDP 33402 T**	⚠	FORD
323731	**VKDC 35202 T**	**VKDP 33203 T**		FIAT
323734	**VKDA 35306 T**	**VKDP 33300 T**	⚠	CITROËN
323734	**VKDA 35307 T**	**VKDP 33300 T**	⚠	CITROËN
323735	**VKDA 35306 T**	**VKDP 33300 T**	⚠	CITROËN
323735	**VKDA 35307 T**	**VKDP 33300 T**	⚠	CITROËN
323808	**VKDA 35615 T**	**VKDP 32600 T**	⚠	RENAULT
323808	**VKDA 35616 T**	**VKDP 32600 T**	⚠	RENAULT
323817	**VKDA 35403 T**	**VKDP 31400 T**	⚠	FORD
323817	**VKDA 35406 T**	**VKDP 31400 T**	⚠	FORD
323817	**VKDA 35407 T**	**VKDP 31400 T**	⚠	FORD
323818	**VKDA 35403 T**	**VKDP 31400 T**		FORD
323825	**VKDA 35600 T**	**VKDP 31601 T**	⚠	RENAULT
323825	**VKDA 35601 T**	**VKDP 31601 T**	⚠	RENAULT
323827	**VKD 35001 T**	**VKDP 32600 T**	⚠	RENAULT
323827	**VKDA 35615 T**	**VKDP 32600 T**	⚠	RENAULT
323838	**VKD 35002 T**	**VKDP 33300 T**	⚠	CITROËN / PEUGEOT
323838	**VKDA 35306 T**	**VKDP 33300 T**	⚠	CITROËN / PEUGEOT
323838	**VKDA 35307 T**	**VKDP 33300 T**	⚠	CITROËN / PEUGEOT
323839	**VKD 35002 T**	**VKDP 33300 T**	⚠	CITROËN / PEUGEOT
323839	**VKDA 35306 T**	**VKDP 33300 T**	⚠	CITROËN / PEUGEOT
323839	**VKDA 35307 T**	**VKDP 33300 T**	⚠	CITROËN / PEUGEOT
323849	**VKDA 35601 T**	**VKDP 31601 T**		RENAULT
324007	**VKDA 35810 T**	**VKDP 33801 T**	⚠	MERCEDES BENZ
324007	**VKDA 35811 T**	**VKDP 33801 T**	⚠	MERCEDES BENZ
324010		**VKDP 93203 T**		NISSAN
324011		**VKDP 93203 T**		NISSAN
324012	**VKDA 35303 T**	**VKDP 33300 T**		PEUGEOT
324013	**VKDA 35303 T**	**VKDP 33300 T**		CITROËN / PEUGEOT
324014	**VKDA 35303 T**	**VKDP 33300 T**	⚠	PEUGEOT
324014	**VKDA 35304 T**	**VKDP 33300 T**	⚠	PEUGEOT
324014	**VKDA 35305 T**	**VKDP 33300 T**	⚠	PEUGEOT
324015	**VKDA 35403 T**		⚠	FORD
324015	**VKDA 35406 T**		⚠	FORD
324016	**VKDA 35113 T**	**VKDP 33101 T**		AUDI / SEAT / SKODA / VW
324025	**VKDA 35110 T**	**VKDP 33100 T**	⚠	SEAT / VW
324025	**VKDA 35110 T**	**VKDP 33102 T**	⚠	SEAT / VW
324025	**VKDA 35110 T**	**VKDP 33107 T**	⚠	SEAT / VW
324025	**VKDA 35110 T**	**VKDP 33108 T**	⚠	SEAT / VW
324025	**VKDA 35110 T**	**VKDP 33800 T**	⚠	SEAT / VW
324025	**VKDA 35111 T**	**VKDP 33100 T**	⚠	SEAT / VW
324025	**VKDA 35111 T**	**VKDP 33102 T**	⚠	SEAT / VW
324025	**VKDA 35111 T**	**VKDP 33107 T**	⚠	SEAT / VW
324025	**VKDA 35111 T**	**VKDP 33108 T**	⚠	SEAT / VW
324025	**VKDA 35111 T**	**VKDP 33800 T**	⚠	SEAT / VW
324025	**VKDA 35115 T**	**VKDP 33100 T**	⚠	SEAT / VW
324025	**VKDA 35115 T**	**VKDP 33102 T**	⚠	SEAT / VW
324025	**VKDA 35115 T**	**VKDP 33107 T**	⚠	SEAT / VW
324025	**VKDA 35115 T**	**VKDP 33108 T**	⚠	SEAT / VW
324025	**VKDA 35115 T**	**VKDP 33800 T**	⚠	SEAT / VW

324025	**VKDC 35100 T**	**VKDP 33100 T**	⚠	SEAT / VW
324025	**VKDC 35100 T**	**VKDP 33102 T**	⚠	SEAT / VW
324025	**VKDC 35100 T**	**VKDP 33107 T**	⚠	SEAT / VW
324025	**VKDC 35100 T**	**VKDP 33108 T**	⚠	SEAT / VW
324025	**VKDC 35100 T**	**VKDP 33800 T**	⚠	SEAT / VW
324025	**VKDC 35101 T**	**VKDP 33100 T**	⚠	SEAT / VW
324025	**VKDC 35101 T**	**VKDP 33102 T**	⚠	SEAT / VW
324025	**VKDC 35101 T**	**VKDP 33107 T**	⚠	SEAT / VW
324025	**VKDC 35101 T**	**VKDP 33108 T**	⚠	SEAT / VW
324025	**VKDC 35101 T**	**VKDP 33800 T**	⚠	SEAT / VW
324025	**VKDC 35102 T**	**VKDP 33100 T**	⚠	SEAT / VW
324025	**VKDC 35102 T**	**VKDP 33102 T**	⚠	SEAT / VW
324025	**VKDC 35102 T**	**VKDP 33107 T**	⚠	SEAT / VW
324025	**VKDC 35102 T**	**VKDP 33108 T**	⚠	SEAT / VW
324025	**VKDC 35102 T**	**VKDP 33800 T**	⚠	SEAT / VW
324025	**VKDC 35103 T**	**VKDP 33100 T**	⚠	SEAT / VW
324025	**VKDC 35103 T**	**VKDP 33102 T**	⚠	SEAT / VW
324025	**VKDC 35103 T**	**VKDP 33107 T**	⚠	SEAT / VW
324025	**VKDC 35103 T**	**VKDP 33108 T**	⚠	SEAT / VW
324025	**VKDC 35103 T**	**VKDP 33800 T**	⚠	SEAT / VW
324805	**VKDC 35203 T**	**VKDP 31200 T**		FIAT
324806	**VKDA 35200 T**	**VKDP 33300 T**	⚠	FIAT / LANCIA
324806	**VKDA 35200 T**	**VKDP 33202 T**	⚠	FIAT / LANCIA
324806	**VKDC 35204 T**	**VKDP 33300 T**	⚠	FIAT / LANCIA
324806	**VKDC 35204 T**	**VKDP 33202 T**	⚠	FIAT / LANCIA
324808	**VKD 35001 T**	**VKDP 32600 T**	⚠	RENAULT
324808	**VKDA 35615 T**	**VKDP 32600 T**	⚠	RENAULT
331002	**VKDA 35603 T**	VKDP 32602 T	⚠	RENAULT
331002	**VKDA 35604 T**	VKDP 32602 T	⚠	RENAULT
331900	**VKDA 35230 T**	**VKDP 33207 T**		ALFA ROMEO
332005		**VKDP 83201 T**		NISSAN
332006		**VKDP 83201 T**		NISSAN
332007		**VKDP 83201 T**		NISSAN
332008		**VKDP 83201 T**		NISSAN
332009		**VKDP 93401 T**		MAZDA
332010		**VKDP 93401 T**		MAZDA
332017		**VKDP 93401 T**		MAZDA
332018		**VKDP 93401 T**		MAZDA
332019		**VKDP 93401 T**		MAZDA
332020		**VKDP 93401 T**		MAZDA
332025	**VKDA 88205 T**			NISSAN
332028	**VKDA 88202 T**			NISSAN
332029	**VKDA 88202 T**			NISSAN
332054	**VKDA 88401 T**			MAZDA
332055	**VKDA 88401 T**			MAZDA
332060	**VKDA 88205 T**			NISSAN
332068	**VKDA 88401 T**			MAZDA
332069	**VKDA 88401 T**			MAZDA
332100		**VKDP 33500 T**		CHEVROLET / DAEWOO
332101		**VKDP 33500 T**		CHEVROLET / DAEWOO
332800	**VKDC 35202 T**	**VKDP 33203 T**		FIAT
333006		**VKDP 31400 T**		FORD
333007		**VKDP 81400 T**		MAZDA
333008		**VKDP 81400 T**		MAZDA
333009	**VKDA 37201 T**	**VKDP 31400 T**	⚠	FIAT
333009	**VKDA 37204 T**	**VKDP 31400 T**	⚠	FIAT
333019	**VKDA 35403 T**	**VKDP 33409 T**		FORD
333020	**VKDA 35303 T**	**VKDP 33300 T**		CITROËN / PEUGEOT / TALBOT
333024	**VKDA 81501 T**	**VKDP 81505 T**	⚠	MITSUBISHI
333024	**VKDA 81501 T**	**VKDP 83502 T**	⚠	MITSUBISHI
333024	**VKDA 81502 T**	**VKDP 81505 T**	⚠	MITSUBISHI
333024	**VKDA 81502 T**	**VKDP 83502 T**	⚠	MITSUBISHI
333025		**VKDP 81400 T**		MAZDA
333026		**VKDP 81400 T**		MAZDA

KYB .../...

333027		**VKDP 93402 T**		MAZDA
333028		**VKDP 84402 T**		MAZDA
333029		**VKDP 84402 T**		MAZDA
333034		**VKDP 83201 T**		NISSAN
333035		**VKDP 83201 T**		NISSAN
333037	**VKDA 81501 T**	**VKDP 83502 T**	⚠	MITSUBISHI
333037	**VKDA 81501 T**	**VKDP 81505 T**	⚠	MITSUBISHI
333037	**VKDA 81502 T**	**VKDP 83502 T**	⚠	MITSUBISHI
333037	**VKDA 81502 T**	**VKDP 81505 T**	⚠	MITSUBISHI
333037	**VKDC 81503 T**	**VKDP 83502 T**	⚠	MITSUBISHI
333037	**VKDC 81503 T**	**VKDP 81505 T**	⚠	MITSUBISHI
333044		**VKDP 31400 T**		FORD
333048	**VKDA 37201 T**	**VKDP 31400 T**	⚠	FIAT
333048	**VKDA 37204 T**	**VKDP 31400 T**	⚠	FIAT
333055		**VKDP 84402 T**		MAZDA
333056		**VKDP 84402 T**		MAZDA
333059	**VKDA 35602 T**	VKDP 31606 T		RENAULT
333060	**VKDA 35602 T**	VKDP 31606 T		RENAULT
333061	**VKDA 35602 T**	VKDP 31606 T		RENAULT
333074	**VKDA 35403 T**		⚠	FORD
333074	**VKDA 35409 T**		⚠	FORD
333075	**VKD 35012 T**			AUSTIN / ROVER
333076	**VKDA 35403 T**	**VKDP 31400 T**	⚠	FORD
333076	**VKDA 35409 T**	**VKDP 31400 T**	⚠	FORD
333081		**VKDP 93401 T**		MAZDA
333082		**VKDP 93401 T**		MAZDA
333085		**VKDP 93401 T**		MAZDA
333086		**VKDP 93401 T**		MAZDA
333087		**VKDP 81400 T**		MAZDA
333088		**VKDP 81400 T**		MAZDA
333089	**VKDA 88203 T**		⚠	NISSAN
333089	**VKDA 88204 T**		⚠	NISSAN
333090	**VKDA 88203 T**		⚠	NISSAN
333090	**VKDA 88204 T**		⚠	NISSAN
333091	**VKDA 88203 T**			NISSAN
333092	**VKDA 88203 T**			NISSAN
333097		**VKDP 93401 T**		MAZDA
333098		**VKDP 93401 T**		MAZDA
333100	**VKD 35001 T**	**VKDP 33605 T**		VOLVO
333101	**VKD 35001 T**	**VKDP 33605 T**		VOLVO
333102	**VKD 35001 T**	**VKDP 33605 T**		VOLVO
333114	**VKDC 81103 T**			TOYOTA
333115	**VKDC 81103 T**			TOYOTA
333118	**VKDC 81104 T**			TOYOTA
333119	**VKDC 81104 T**			TOYOTA
333124	**VKDC 81504 T**			MITSUBISHI / PROTON
333125	**VKDC 81504 T**			MITSUBISHI
333126		**VKDP 81400 T**		MAZDA
333127		**VKDP 81400 T**		MAZDA
333132		**VKDP 93401 T**		MAZDA
333133		**VKDP 93401 T**		MAZDA
333156		**VKDP 33401 T**		HYUNDAI
333192	**VKDA 88203 T**			NISSAN
333193	**VKDA 88203 T**			NISSAN
333223	**VKD 35012 T**			AUSTIN / ROVER
333238	**VKDA 88203 T**			NISSAN
333239	**VKDA 88203 T**			NISSAN
333266		**VKDP 33107 T**		MAZDA
333267		**VKDP 33107 T**		MAZDA
333282		**VKDP 93203 T**		NISSAN
333283		**VKDP 93203 T**		NISSAN
333306		**VKDP 33509 T**		OPEL / SUZUKI / VAUXHALL
333307		**VKDP 33509 T**		OPEL / SUZUKI / VAUXHALL
333379	**VKDA 35424 T**			FORD
333380	**VKDA 35424 T**			FORD
333383	**VKDA 35424 T**			FORD / MAZDA
333384	**VKDA 35424 T**			FORD / MAZDA
333700	**VKDA 35407 T**			FORD
333701	**VKDA 35407 T**	**VKDP 33401 T**		FORD / MAZDA
333702	**VKDA 35407 T**	**VKDP 33401 T**		FORD / MAZDA
333703	**VKDA 35407 T**	**VKDP 33401 T**		FORD / MAZDA
333704	**VKDA 35407 T**	**VKDP 33401 T**		FORD / MAZDA
333706	**VKDA 35600 T**	**VKDP 31601 T**	⚠	RENAULT
333706	**VKDA 35601 T**	**VKDP 31601 T**	⚠	RENAULT
333707	**VKDA 35607 T**	**VKDP 31601 T**		RENAULT
333708	**VKDA 35607 T**	**VKDP 31601 T**		RENAULT
333709	**VKDA 35417 T**	**VKDP 33402 T**	⚠	FORD
333709	**VKDA 35425 T**	**VKDP 33402 T**	⚠	FORD
333710	**VKDA 35417 T**	**VKDP 33402 T**	⚠	FORD
333710	**VKDA 35425 T**	**VKDP 33402 T**	⚠	FORD
333711	**VKDC 35204 T**	**VKDP 33300 T**		FIAT
333712	**VKDA 35110 T**	**VKDP 33100 T**	⚠	SEAT / VW
333712	**VKDA 35110 T**	**VKDP 33107 T**	⚠	SEAT / VW
333712	**VKDA 35110 T**	**VKDP 33108 T**	⚠	SEAT / VW
333712	**VKDA 35110 T**	**VKDP 33800 T**	⚠	SEAT / VW
333712	**VKDA 35111 T**	**VKDP 33100 T**	⚠	SEAT / VW
333712	**VKDA 35111 T**	**VKDP 33107 T**	⚠	SEAT / VW
333712	**VKDA 35111 T**	**VKDP 33108 T**	⚠	SEAT / VW
333712	**VKDA 35111 T**	**VKDP 33800 T**	⚠	SEAT / VW
333712	**VKDA 35115 T**	**VKDP 33100 T**	⚠	SEAT / VW
333712	**VKDA 35115 T**	**VKDP 33107 T**	⚠	SEAT / VW
333712	**VKDA 35115 T**	**VKDP 33108 T**	⚠	SEAT / VW
333712	**VKDA 35115 T**	**VKDP 33800 T**	⚠	SEAT / VW
333712	**VKDC 35101 T**	**VKDP 33100 T**	⚠	SEAT / VW
333712	**VKDC 35101 T**	**VKDP 33107 T**	⚠	SEAT / VW
333712	**VKDC 35101 T**	**VKDP 33108 T**	⚠	SEAT / VW
333712	**VKDC 35101 T**	**VKDP 33800 T**	⚠	SEAT / VW
333712	**VKDC 35102 T**	**VKDP 33100 T**	⚠	SEAT / VW
333712	**VKDC 35102 T**	**VKDP 33107 T**	⚠	SEAT / VW
333712	**VKDC 35102 T**	**VKDP 33108 T**	⚠	SEAT / VW
333712	**VKDC 35102 T**	**VKDP 33800 T**	⚠	SEAT / VW
333713	**VKDA 35113 T**	**VKDP 33101 T**		SEAT / SKODA / VW
333714	**VKDA 35600 T**	**VKDP 31600 T**		RENAULT
333715	**VKDA 35508 T**	**VKDP 34500 T**	⚠	OPEL / VAUXHALL
333715	**VKDA 35509 T**	**VKDP 34500 T**	⚠	OPEL / VAUXHALL
333716	**VKDA 35508 T**	**VKDP 34500 T**	⚠	OPEL / VAUXHALL
333716	**VKDA 35509 T**	**VKDP 34500 T**	⚠	OPEL / VAUXHALL
333717	**VKDA 35619 T**	**VKDP 31602 T**		RENAULT
333718	**VKDA 35625 T**	**VKDP 31603 T**		RENAULT
333723	**VKDA 35600 T**	**VKDP 31600 T**		RENAULT
333724	**VKDA 35600 T**	**VKDP 31600 T**		RENAULT
333732	**VKDA 35306 T**	**VKDP 33300 T**	⚠	CITROËN
333732	**VKDA 35307 T**	**VKDP 33300 T**	⚠	CITROËN
333733	**VKDA 35306 T**	**VKDP 33300 T**	⚠	CITROËN
333733	**VKDA 35307 T**	**VKDP 33300 T**	⚠	CITROËN
333734	**VKDA 35306 T**	**VKDP 33300 T**	⚠	CITROËN
333734	**VKDA 35307 T**	**VKDP 33300 T**	⚠	CITROËN
333735	**VKDA 35306 T**	**VKDP 33300 T**	⚠	CITROËN
333735	**VKDA 35307 T**	**VKDP 33300 T**	⚠	CITROËN
333738	**VKDA 35315 T**	**VKDP 33304 T**		PEUGEOT
333739	**VKDA 35315 T**	**VKDP 33304 T**		PEUGEOT
333801	**VKDA 35403 T**	**VKDP 31400 T**	⚠	FORD
333801	**VKDA 35409 T**	**VKDP 31400 T**	⚠	FORD
333802	**VKDA 35403 T**	**VKDP 31400 T**	⚠	FORD
333802	**VKDA 35409 T**	**VKDP 31400 T**	⚠	FORD
333803	**VKDA 35403 T**	**VKDP 31400 T**	⚠	FORD
333803	**VKDA 35409 T**	**VKDP 31400 T**	⚠	FORD
333804	**VKDA 35602 T**	VKDP 31606 T		RENAULT
333805	**VKDA 35602 T**	VKDP 31606 T		RENAULT

333806	**VKDA 35602 T**	VKDP 31606 T		RENAULT
333807	**VKD 35001 T**	**VKDP 32600 T**		RENAULT
333808	**VKDA 35615 T**	**VKDP 32600 T**	⚠	RENAULT
333808	**VKDA 35616 T**	**VKDP 32600 T**	⚠	RENAULT
333812	**VKDA 35702 T**	**VKDP 32103 T**	⚠	SEAT
333812	**VKDA 37201 T**	**VKDP 32103 T**	⚠	SEAT
333813	**VKDA 35702 T**	**VKDP 32103 T**	⚠	SEAT
333813	**VKDA 37201 T**	**VKDP 32103 T**	⚠	SEAT
333817	**VKDA 35403 T**	**VKDP 31400 T**		FORD
333818	**VKDA 35403 T**	**VKDP 31400 T**	⚠	FORD
333818	**VKDA 35403 T**	**VKDP 33401 T**	⚠	FORD
333818	**VKDA 35407 T**	**VKDP 31400 T**	⚠	FORD
333818	**VKDA 35407 T**	**VKDP 33401 T**	⚠	FORD
333820	**VKDA 35401 T**	**VKDP 33401 T**	⚠	FORD
333820	**VKDA 35405 T**	**VKDP 33401 T**	⚠	FORD
333821	**VKDA 35401 T**	**VKDP 31400 T**	⚠	FORD
333821	**VKDA 35401 T**	**VKDP 33401 T**	⚠	FORD
333821	**VKDA 35405 T**	**VKDP 31400 T**	⚠	FORD
333821	**VKDA 35405 T**	**VKDP 33401 T**	⚠	FORD
333821	**VKDA 35406 T**	**VKDP 31400 T**	⚠	FORD
333821	**VKDA 35406 T**	**VKDP 33401 T**	⚠	FORD
333822	**VKDA 35403 T**	**VKDP 31400 T**		FORD
333823	**VKDA 35403 T**	**VKDP 31400 T**	⚠	FORD
333823	**VKDA 35406 T**	**VKDP 31400 T**	⚠	FORD
333823	**VKDA 35407 T**	**VKDP 31400 T**	⚠	FORD
333824	**VKDA 35600 T**	**VKDP 31601 T**	⚠	RENAULT
333824	**VKDA 35601 T**	**VKDP 31601 T**	⚠	RENAULT
333825	**VKDA 35600 T**	**VKDP 31601 T**	⚠	RENAULT
333825	**VKDA 35601 T**	**VKDP 31601 T**	⚠	RENAULT
333826	**VKDA 35401 T**	**VKDP 33401 T**	⚠	FORD
333826	**VKDA 35401 T**	**VKDP 31400 T**	⚠	FORD
333826	**VKDA 35405 T**	**VKDP 33401 T**	⚠	FORD
333826	**VKDA 35405 T**	**VKDP 31400 T**	⚠	FORD
333827	**VKD 35001 T**	**VKDP 32600 T**	⚠	RENAULT
333827	**VKDA 35615 T**	**VKDP 32600 T**	⚠	RENAULT
333828	**VKDA 35303 T**	**VKDP 33300 T**		CITROËN / PEUGEOT
333829	**VKDA 35303 T**	**VKDP 33300 T**	⚠	PEUGEOT
333829	**VKDA 35304 T**	**VKDP 33300 T**	⚠	PEUGEOT
333829	**VKDA 35305 T**	**VKDP 33300 T**	⚠	PEUGEOT
333830	**VKDA 35303 T**	**VKDP 33300 T**		PEUGEOT
333831	**VKDA 35500 T**	**VKDP 33500 T**	⚠	OPEL / VAUXHALL
333831	**VKDA 35509 T**	**VKDP 33500 T**	⚠	OPEL / VAUXHALL
333832	**VKDA 35403 T**	**VKDP 33409 T**		FORD
333833	**VKDA 37202 T**	**VKDP 31400 T**		FIAT
333834	**VKDA 35403 T**	**VKDP 31400 T**	⚠	FORD
333834	**VKDA 35409 T**	**VKDP 31400 T**	⚠	FORD
333835	**VKDA 35112 T**	**VKDP 33110 T**	⚠	SKODA
333835	**VKDA 35112 T**	**VKDP 33203 T**	⚠	SKODA
333836	**VKDA 35306 T**	**VKDP 33300 T**	⚠	CITROËN
333836	**VKDA 35307 T**	**VKDP 33300 T**	⚠	CITROËN
333837	**VKDA 35306 T**	**VKDP 33300 T**	⚠	CITROËN
333837	**VKDA 35307 T**	**VKDP 33300 T**	⚠	CITROËN
333838	**VKD 35002 T**	**VKDP 33300 T**	⚠	CITROËN / PEUGEOT
333838	**VKDA 35306 T**	**VKDP 33300 T**	⚠	CITROËN / PEUGEOT
333838	**VKDA 35307 T**	**VKDP 33300 T**	⚠	CITROËN / PEUGEOT
333839	**VKD 35002 T**	**VKDP 33300 T**	⚠	CITROËN / PEUGEOT
333839	**VKDA 35306 T**	**VKDP 33300 T**	⚠	CITROËN / PEUGEOT
333839	**VKDA 35307 T**	**VKDP 33300 T**	⚠	CITROËN / PEUGEOT
333840	**VKDA 35702 T**	**VKDP 32103 T**	⚠	SEAT
333840	**VKDA 37201 T**	**VKDP 32103 T**	⚠	SEAT
333841	**VKDA 35401 T**	**VKDP 31400 T**	⚠	FORD
333841	**VKDA 35401 T**	**VKDP 33401 T**	⚠	FORD
333841	**VKDA 35403 T**	**VKDP 31400 T**	⚠	FORD
333841	**VKDA 35403 T**	**VKDP 33401 T**	⚠	FORD
333841	**VKDA 35405 T**	**VKDP 31400 T**	⚠	FORD
333841	**VKDA 35405 T**	**VKDP 33401 T**	⚠	FORD
333841	**VKDA 35409 T**	**VKDP 31400 T**	⚠	FORD
333841	**VKDA 35409 T**	**VKDP 33401 T**	⚠	FORD
333842	**VKDA 35200 T**	**VKDP 33202 T**	⚠	FIAT
333842	**VKDA 35200 T**	**VKDP 33300 T**	⚠	FIAT
333842	**VKDC 35204 T**	**VKDP 33202 T**	⚠	FIAT
333842	**VKDC 35204 T**	**VKDP 33300 T**	⚠	FIAT
333843	**VKDC 35203 T**	**VKDP 31200 T**		FIAT
333844	**VKDC 35207 T**			LANCIA
333847	**VKDA 35602 T**	VKDP 31606 T		RENAULT
333848	**VKDA 35607 T**	**VKDP 31601 T**		RENAULT
333849	**VKDA 35601 T**	**VKDP 31601 T**		RENAULT
333856		**VKDP 33800 T**		ALFA ROMEO
333857		**VKDP 33800 T**		ALFA ROMEO
333858	**VKDA 35201 T**	**VKDP 33800 T**		ALFA ROMEO
333859	**VKDA 35201 T**	**VKDP 33800 T**		ALFA ROMEO
333866		**VKDP 31400 T**		LANCIA
333867		**VKDP 31400 T**		LANCIA
333870	**VKDC 35202 T**	**VKDP 33203 T**		FIAT
333871	**VKDA 37201 T**	**VKDP 33800 T**		FIAT
333872	**VKDA 35115 T**	**VKDP 33800 T**		SKODA
333902	**VKDA 35319 T**	**VKDP 33308 T**		PEUGEOT
333903	**VKDA 35319 T**	**VKDP 33308 T**		PEUGEOT
333909	**VKDC 35802 T**	**VKDP 33800 T**		BMW
333910	**VKDC 35802 T**	**VKDP 33800 T**		BMW
333914	**VKDC 35203 T**			LANCIA
333915	**VKDC 35802 T**	**VKDP 33800 T**		BMW
333916	**VKDC 35802 T**	**VKDP 33800 T**		BMW
333917	**VKDC 35802 T**	**VKDP 33800 T**		BMW
333918	**VKDC 35802 T**	**VKDP 33800 T**		BMW
333919	**VKDC 35802 T**	**VKDP 33800 T**		BMW
333920	**VKDC 35802 T**	**VKDP 33800 T**		BMW
333921	**VKDA 35306 T**	**VKDP 33300 T**	⚠	CITROËN
333921	**VKDA 35307 T**	**VKDP 33300 T**	⚠	CITROËN
333922	**VKDA 35306 T**	**VKDP 33300 T**	⚠	CITROËN
333922	**VKDA 35307 T**	**VKDP 33300 T**	⚠	CITROËN
333925	**VKDA 35312 T**	**VKDP 32302 T**	⚠	PEUGEOT
333925	**VKDA 35312 T**	**VKDP 33308 T**	⚠	PEUGEOT
333926	**VKDA 35312 T**	**VKDP 32302 T**	⚠	PEUGEOT
333926	**VKDA 35312 T**	**VKDP 33308 T**	⚠	PEUGEOT
333927	**VKDA 35312 T**	**VKDP 32302 T**	⚠	PEUGEOT
333927	**VKDA 35312 T**	**VKDP 33308 T**	⚠	PEUGEOT
333928	**VKDA 35312 T**	**VKDP 33308 T**	⚠	PEUGEOT
333928	**VKDA 35312 T**	**VKDP 32302 T**	⚠	PEUGEOT
333929	**VKDA 35308 T**	**VKDP 33306 T**	⚠	PEUGEOT
333929	**VKDA 35308 T**	**VKDP 33303 T**	⚠	PEUGEOT
333929	**VKDA 35309 T**	**VKDP 33306 T**	⚠	PEUGEOT
333929	**VKDA 35309 T**	**VKDP 33303 T**	⚠	PEUGEOT
333930	**VKDA 35308 T**	**VKDP 33303 T**	⚠	PEUGEOT
333930	**VKDA 35308 T**	**VKDP 33306 T**	⚠	PEUGEOT
333930	**VKDA 35309 T**	**VKDP 33303 T**	⚠	PEUGEOT
333930	**VKDA 35309 T**	**VKDP 33306 T**	⚠	PEUGEOT
333931	**VKDA 35308 T**	**VKDP 32301 T**	⚠	PEUGEOT
333931	**VKDA 35309 T**	**VKDP 32301 T**	⚠	PEUGEOT
333932	**VKDC 35802 T**	**VKDP 33800 T**		BMW
333933	**VKDC 35802 T**	**VKDP 33800 T**		BMW
333934	**VKDC 35802 T**	**VKDP 33800 T**		BMW
333935	**VKDC 35802 T**	**VKDP 33800 T**		BMW
333936	**VKDC 35802 T**	**VKDP 33800 T**		BMW
333937	**VKDC 35802 T**	**VKDP 33800 T**		BMW
333938	**VKDC 35802 T**	**VKDP 33800 T**		BMW
333939	**VKDC 35802 T**	**VKDP 33800 T**		BMW
333940	**VKDA 35306 T**	**VKDP 33300 T**		CITROËN
333941	**VKDA 35306 T**	**VKDP 33300 T**		CITROËN

KYB .../...

333942	**VKDC 35232 T**			FIAT
333943	**VKDA 35407 T**			FORD
333944	**VKD 35005 T**			MERCEDES BENZ
333945	**VKDA 35508 T**		⚠	OPEL / VAUXHALL
333945	**VKDA 35509 T**		⚠	OPEL / VAUXHALL
333946	**VKDA 35508 T**		⚠	OPEL / VAUXHALL
333946	**VKDA 35509 T**		⚠	OPEL / VAUXHALL
333947	**VKDA 35319 T**			PEUGEOT
333948	**VKDA 35319 T**			PEUGEOT
333951	**VKDA 37201 T**	**VKDP 33800 T**		FIAT / SEAT
333960	**VKDA 35319 T**	**VKDP 33308 T**		PEUGEOT
333961	**VKDA 35319 T**	**VKDP 33308 T**		PEUGEOT
334001		**VKDP 81505 T**		MITSUBISHI
334017	**VKDA 35810 T**	**VKDP 33801 T**	⚠	MERCEDES BENZ
334017	**VKDA 35811 T**	**VKDP 33801 T**	⚠	MERCEDES BENZ
334018	**VKDA 35400 T**	**VKDP 33405 T**	⚠	FORD
334018	**VKDA 35416 T**	**VKDP 33405 T**	⚠	FORD
334019	**VKDC 81503 T**	**VKDP 83503 T**	⚠	MITSUBISHI
334019	**VKDC 81503 T**	**VKDP 83502 T**	⚠	MITSUBISHI
334022	**VKDA 35303 T**	**VKDP 33300 T**		CITROËN / PEUGEOT
334023	**VKDA 35303 T**	**VKDP 33300 T**		CITROËN / PEUGEOT
334029	**VKDC 35420 T**	**VKDP 33408 T**		SAAB
334034		**VKDP 84401 T**		MAZDA
334035		**VKDP 84401 T**		MAZDA
334037	**VKDC 81201 T**			NISSAN
334038	**VKDC 81201 T**			NISSAN
334049	**VKDC 81503 T**			MITSUBISHI
334056		**VKDP 93203 T**		NISSAN
334057		**VKDP 93203 T**		NISSAN
334070	**VKDC 81505 T**			HYUNDAI / KIA / MITSUBISHI
334071	**VKDC 81505 T**			HYUNDAI / MITSUBISHI
334072	**VKDC 81504 T**			MITSUBISHI / PROTON
334073	**VKDC 81504 T**			MITSUBISHI
334088	**VKDC 81503 T**			HYUNDAI
334099	**VKDA 35510 T**	**VKDP 33504 T**	⚠	OPEL / VAUXHALL
334099	**VKDA 35511 T**	**VKDP 33504 T**	⚠	OPEL / VAUXHALL
334100	**VKDA 35510 T**	**VKDP 33504 T**	⚠	OPEL / VAUXHALL
334100	**VKDA 35511 T**	**VKDP 33504 T**	⚠	OPEL / VAUXHALL
334154	**VKDC 35613 T**	**VKDP 33601 T**		MITSUBISHI / VOLVO
334155	**VKDC 35613 T**	**VKDP 33601 T**		MITSUBISHI / VOLVO
334174	**VKDC 35613 T**	**VKDP 33601 T**		VOLVO
334175	**VKDC 35613 T**	**VKDP 33601 T**		VOLVO
334203	**VKDC 81112 T**	**VKDP 83106 T**		TOYOTA
334204	**VKDC 81112 T**	**VKDP 83106 T**		TOYOTA
334205		**VKDP 83201 T**		TOYOTA
334206		**VKDP 83201 T**		TOYOTA
334219	**VKDA 35403 T**	**VKDP 33409 T**		FORD
334329		**VKDP 83201 T**		TOYOTA
334330		**VKDP 83201 T**		TOYOTA
334354	**VKDC 35613 T**	**VKDP 33601 T**		VOLVO
334355	**VKDC 35613 T**	**VKDP 33601 T**		VOLVO
334600	**VKDA 35509 T**	**VKDP 34500 T**		OPEL / VAUXHALL
334601	**VKDA 35509 T**	**VKDP 34500 T**		OPEL / VAUXHALL
334602	**VKDA 35508 T**	**VKDP 34500 T**		OPEL / VAUXHALL
334603	**VKDA 35508 T**	**VKDP 34500 T**		OPEL / VAUXHALL
334604	**VKDC 35802 T**			BMW
334605	**VKDC 35802 T**			BMW
334606	**VKD 35018 T**			LANCIA
334607	**VKDA 35508 T**	**VKDP 34500 T**		OPEL / VAUXHALL
334608	**VKDA 35508 T**	**VKDP 34500 T**		OPEL / VAUXHALL
334609	**VKDA 35508 T**	**VKDP 34500 T**	⚠	OPEL / VAUXHALL
334609	**VKDA 35509 T**	**VKDP 34500 T**	⚠	OPEL / VAUXHALL
334610	**VKDA 35508 T**	**VKDP 34500 T**	⚠	OPEL / VAUXHALL
334610	**VKDA 35509 T**	**VKDP 34500 T**	⚠	OPEL / VAUXHALL
334611	**VKDC 35627 T**		⚠	VOLVO
334611	**VKDC 35634 T**		⚠	VOLVO
334612	**VKD 35018 T**			LANCIA
334614	**VKDC 35814 T**	**VKDP 33800 T**		BMW
334615	**VKDC 35814 T**	**VKDP 33800 T**		BMW
334620	**VKDA 35813 T**			MERCEDES BENZ
334621	**VKDC 35821 T**			MINI
334622	**VKDC 35821 T**			MINI
334800	**VKDA 35222 T**		⚠	ALFA ROMEO
334800	**VKDA 35223 T**		⚠	ALFA ROMEO
334801	**VKDA 40208 T**			ALFA ROMEO / LANCIA
334802	**VKDA 35623 T**	**VKDP 32601 T**		RENAULT
334804	**VKDC 35213 T**		⚠	FIAT / LANCIA
334804	**VKDC 35214 T**		⚠	FIAT / LANCIA
334805	**VKDC 35203 T**	**VKDP 31200 T**		FIAT
334807	**VKDA 35623 T**	**VKDP 32601 T**		RENAULT
334808	**VKD 35001 T**	**VKDP 32600 T**	⚠	RENAULT
334808	**VKDA 35615 T**	**VKDP 32600 T**	⚠	RENAULT
334809	**VKDC 35204 T**	**VKDP 33300 T**		FIAT
334810	**VKDA 35110 T**	**VKDP 33108 T**	⚠	SEAT / VW
334810	**VKDA 35110 T**	**VKDP 33107 T**	⚠	SEAT / VW
334810	**VKDA 35110 T**	**VKDP 33100 T**	⚠	SEAT / VW
334810	**VKDA 35115 T**	**VKDP 33108 T**	⚠	SEAT / VW
334810	**VKDA 35115 T**	**VKDP 33107 T**	⚠	SEAT / VW
334810	**VKDA 35115 T**	**VKDP 33100 T**	⚠	SEAT / VW
334810	**VKDC 35101 T**	**VKDP 33108 T**	⚠	SEAT / VW
334810	**VKDC 35101 T**	**VKDP 33107 T**	⚠	SEAT / VW
334810	**VKDC 35101 T**	**VKDP 33100 T**	⚠	SEAT / VW
334810	**VKDC 35102 T**	**VKDP 33108 T**	⚠	SEAT / VW
334810	**VKDC 35102 T**	**VKDP 33107 T**	⚠	SEAT / VW
334810	**VKDC 35102 T**	**VKDP 33100 T**	⚠	SEAT / VW
334811	**VKDA 35110 T**	**VKDP 33108 T**	⚠	VW
334811	**VKDA 35110 T**	**VKDP 33100 T**	⚠	VW
334811	**VKDC 35100 T**	**VKDP 33108 T**	⚠	VW
334811	**VKDC 35100 T**	**VKDP 33100 T**	⚠	VW
334811	**VKDC 35101 T**	**VKDP 33108 T**	⚠	VW
334811	**VKDC 35101 T**	**VKDP 33100 T**	⚠	VW
334812	**VKDA 35113 T**	**VKDP 33101 T**		AUDI / SEAT / SKODA / VW
334814	**VKDA 35626 T**	**VKDP 31609 T**		RENAULT
334815	**VKDC 81112 T**	**VKDP 83106 T**		TOYOTA
334816	**VKDC 81112 T**	**VKDP 83106 T**		TOYOTA
334826	**VKDA 35316 T**			CITROËN
334827	**VKDA 35316 T**			CITROËN
334828	**VKDA 35316 T**			CITROËN
334829	**VKDA 35316 T**			CITROËN
334830	**VKD 35001 T**			RENAULT
334834	**VKDA 35122 T**			AUDI / SEAT / VW
334856	**VKDA 35200 T**	**VKDP 33202 T**		FIAT / LANCIA
334860	**VKDA 35200 T**	**VKDP 33300 T**	⚠	FIAT
334860	**VKDC 35204 T**	**VKDP 33300 T**	⚠	FIAT
334861	**VKDC 35204 T**			FIAT
334862	**VKDC 35204 T**			FIAT
334864	**VKDA 35220 T**			FIAT
334865	**VKDA 35221 T**		⚠	FIAT
334865	**VKDA 35225 T**		⚠	FIAT
334866	**VKDA 35220 T**		⚠	FIAT
334866	**VKDA 35221 T**		⚠	FIAT
334868	**VKDA 35115 T**	**VKDP 33800 T**		AUDI / SEAT / SKODA / VW
334901	**VKDC 35802 T**	**VKDP 33800 T**		BMW

334902	**VKDC 35802 T**	**VKDP 33800 T**		BMW	341007		**VKDP 43101 T**		VW	
334903	**VKDA 35510 T**	**VKDP 33504 T**	⚠	OPEL / VAUXHALL	341015		**VKDP 43101 T**		BMW	
334903	**VKDA 35511 T**	**VKDP 33504 T**	⚠	OPEL / VAUXHALL	341023	**VKDA 40102 T**	**VKDP 43102 T**		AUDI / VW	
334905	**VKDA 35402 T**	**VKDP 33400 T**		FORD	341033		**VKDP 43101 T**		AUDI	
334906	**VKDA 40400 T**	**VKDP 43403 T**		FORD	341040		**VKDP 43400 T**		MAZDA	
334907	**VKDA 40400 T**	**VKDP 43403 T**		FORD	341056		**VKDP 93201 T**		NISSAN	
334910	**VKD 35001 T**			RENAULT	341081	**VKDA 40809 T**			BMW	
334911	**VKD 35001 T**			RENAULT	341103		**VKDP 43700 T**		AUSTIN	
334915	**VKDA 35200 T**	**VKDP 83201 T**		ALFA ROMEO	341105		**VKDP 43700 T**		AUSTIN / ROVER	
334916	**VKDA 35200 T**	**VKDP 83201 T**		ALFA ROMEO	341106		**VKDP 43700 T**		AUSTIN	
334917	**VKDA 35200 T**	**VKDP 83201 T**		ALFA ROMEO	341110	**VKDA 35620 T**	**VKDP 32601 T**		RENAULT	
334918	**VKDA 35200 T**	**VKDP 83201 T**		ALFA ROMEO	341132	**VKDA 40113 T**	**VKDP 43101 T**		AUDI	
334919	**VKDA 35200 T**	**VKDP 83201 T**		ALFA ROMEO	341146	**VKDA 40809 T**			BMW	
334920	**VKDA 35222 T**		⚠	ALFA ROMEO	341207	**VKDA 35110 T**	**VKDP 33111 T**	⚠	AUDI / VW	
334920	**VKDA 35223 T**		⚠	ALFA ROMEO	341207	**VKDA 35116 T**	**VKDP 33111 T**	⚠	AUDI / VW	
334921	**VKDA 35402 T**	**VKDP 33400 T**		FORD	341207	**VKDA 35118 T**	**VKDP 33111 T**	⚠	AUDI / VW	
334922	**VKDA 40400 T**	**VKDP 43403 T**		FORD	341211	**VKDA 40813 T**			BMW	
334923	**VKDC 35802 T**	**VKDP 33800 T**		BMW	341229	**VKDA 40300 T**			PEUGEOT	
334924	**VKDC 35802 T**	**VKDP 33800 T**		BMW	341230	**VKDA 40302 T**			PEUGEOT	
334925	**VKDC 35802 T**	**VKDP 33800 T**		BMW	341231	**VKDA 40300 T**			PEUGEOT	
334926	**VKDC 35802 T**	**VKDP 33800 T**		BMW	341252		**VKDP 43105 T**		MAZDA	
334927	**VKDA 35317 T**	**VKDP 33301 T**		CITROËN / FIAT / LANCIA / PEUGEOT	341273	**VKDA 35118 T**	**VKDP 33111 T**		AUDI / SKODA / VW	
					341299		**VKDP 33111 T**		AUDI	
334928	**VKDA 35317 T**	**VKDP 33301 T**		CITROËN / FIAT / PEUGEOT	341323		**VKDP 43105 T**		MAZDA	
					341800		**VKDP 43100 T**		SKODA	
334929	**VKDA 35615 T**	**VKDP 32600 T**		RENAULT	341801	**VKDA 40407 T**			FORD	
334930	**VKDA 35200 T**	**VKDP 83201 T**		ALFA ROMEO	341802	**VKDA 40407 T**			FORD	
334932	**VKDA 40204 T**			ALFA ROMEO	341813	**VKDA 40600 T**	**VKDP 41600 T**		RENAULT	
334933	**VKDC 35802 T**	**VKDP 33800 T**		BMW	341815		**VKDP 83201 T**		TOYOTA	
334934	**VKDC 35802 T**	**VKDP 33800 T**		BMW	341817	**VKDA 40401 T**			FORD	
334935	**VKDC 35802 T**	**VKDP 33800 T**		BMW	341900	**VKDA 40407 T**			FORD	
334936	**VKDC 35802 T**	**VKDP 33800 T**		BMW	341904	**VKDA 35116 T**	**VKDP 33111 T**	⚠	AUDI / VW	
334937	**VKDC 35802 T**	**VKDP 33800 T**		BMW	341904	**VKDA 35118 T**	**VKDP 33111 T**	⚠	AUDI / VW	
334938	**VKDC 35802 T**	**VKDP 33800 T**		BMW	341905	**VKDA 40101 T**	**VKDP 44100 T**		VW	
334939	**VKDC 35814 T**	**VKDP 33800 T**		BMW	341910	**VKDA 35230 T**			ALFA ROMEO	
334940	**VKDC 35814 T**	**VKDP 33800 T**		BMW	341916	**VKDA 40401 T**	**VKDP 43400 T**		FORD	
334945	**VKDC 35814 T**	**VKDP 33800 T**		BMW	341951	**VKDA 40407 T**	**VKDP 43400 T**		FORD	
334946	**VKDC 35814 T**	**VKDP 33800 T**		BMW	341952	**VKDA 40401 T**	**VKDP 43400 T**		FORD / MAZDA	
334947	**VKDA 35110 T**	**VKDP 33405 T**		FORD / SEAT / VW	341953	**VKDA 40401 T**	**VKDP 43400 T**		FORD / MAZDA	
334948	**VKDA 35508 T**	**VKDP 34500 T**		OPEL / VAUXHALL	343013		**VKDP 43700 T**		AUDI	
334949	**VKDA 35508 T**	**VKDP 34500 T**		OPEL / VAUXHALL	343043		**VKDP 43100 T**		VW	
334960	**VKDA 35620 T**	**VKDP 32601 T**		RENAULT	343124		**VKDP 43400 T**		MAZDA	
335800	**VKDA 35415 T**			FORD	343165	**VKDA 40102 T**	**VKDP 43102 T**		AUDI / VW	
335801	**VKD 35020 T**			LANCIA	343169		**VKDP 43101 T**		VW	
335803	**VKDA 35622 T**			NISSAN / OPEL / RENAULT	343184	**VKDA 40805 T**			BMW	
					343189	**VKDA 40218 T**		⚠	FIAT	
335804	**VKDA 35423 T**	***VKDP 33410 T***		FORD	343189	**VKDA 40219 T**		⚠	FIAT	
335805	**VKDA 35423 T**	***VKDP 33410 T***		FORD	343191	**VKDA 40101 T**	**VKDP 43100 T**	⚠	SEAT / VW	
335808	**VKDA 35122 T**			AUDI / SEAT / VW	343191	**VKDA 40101 T**	**VKDP 44100 T**	⚠	SEAT / VW	
335900	**VKDA 35603 T**	VKDP 32602 T	⚠	RENAULT	343206		**VKDP 43100 T**		VW	
335900	**VKDA 35604 T**	VKDP 32602 T	⚠	RENAULT	343223		**VKDP 43102 T**		VW	
335901	**VKDA 35603 T**	VKDP 32602 T	⚠	RENAULT	343255	**VKDA 40805 T**			BMW	
335901	**VKDA 35604 T**	VKDP 32602 T	⚠	RENAULT	343258	**VKDA 40101 T**	**VKDP 43100 T**	⚠	VW	
335902	**VKDA 35603 T**	VKDP 32602 T	⚠	RENAULT	343258	**VKDA 40101 T**	**VKDP 43102 T**	⚠	VW	
335902	**VKDA 35604 T**	VKDP 32602 T	⚠	RENAULT	343268	**VKDA 40805 T**			BMW	
335903	**VKDA 35603 T**	VKDP 32602 T	⚠	RENAULT	343271	**VKDA 40121 T**	**VKDP 43102 T**	⚠	AUDI	
335903	**VKDA 35604 T**	VKDP 32602 T	⚠	RENAULT	343271	**VKDA 40121 T**	**VKDP 43104 T**	⚠	AUDI	
335904	**VKD 35013 T**			FORD	343271	**VKDA 40122 T**	**VKDP 43102 T**	⚠	AUDI	
335905	**VKD 35013 T**			FORD	343271	**VKDA 40122 T**	**VKDP 43104 T**	⚠	AUDI	
335916	**VKDC 35814 T**		⚠	BMW	343273	**VKDA 40407 T**			FORD	
335916	**VKDC 35815 T**		⚠	BMW	343274	**VKDA 40101 T**	**VKDP 43103 T**	⚠	SEAT / VW	
335918	**VKDA 35402 T**			FORD	343274	**VKDA 40101 T**	**VKDP 43105 T**	⚠	SEAT / VW	
335919	**VKDA 40400 T**			FORD	343274	**VKDA 40104 T**	**VKDP 43103 T**	⚠	SEAT / VW	
335920		**VKDP 33802 T**		MERCEDES BENZ	343274	**VKDA 40104 T**	**VKDP 43105 T**	⚠	SEAT / VW	
335921	**VKDA 35521 T**			SAAB	343281	**VKDA 40110 T**			AUDI / SKODA / VW	
335922	**VKDA 35418 T**	**VKDP 33411 T**		FORD						
341003		**VKDP 43101 T**		AUDI	343283	**VKDA 40101 T**			SEAT	

KYB .../...

343290	**VKDA 40404 T**	**VKDP 44400 T**		FORD
343291		**VKDP 44400 T**		FORD
343297	**VKDA 40101 T**			SEAT / VW
343298	**VKDA 40104 T**	**VKDP 43106 T**		SKODA / VW
343302	**VKDA 40121 T**	**VKDP 43102 T**	⚠	AUDI
343302	**VKDA 40121 T**	**VKDP 43104 T**	⚠	AUDI
343302	**VKDA 40122 T**	**VKDP 43102 T**	⚠	AUDI
343302	**VKDA 40122 T**	**VKDP 43104 T**	⚠	AUDI
343328	**VKDA 40104 T**			AUDI / SEAT / SKODA / VW
343330	**VKDA 40805 T**			BMW
343348	**VKDA 40104 T**	**VKDP 43106 T**		AUDI / SEAT / SKODA / VW
343352	**VKDA 40805 T**			BMW
343413	**VKDA 40415 T**			FORD
344230	**VKDA 40610 T**			VOLVO
344407	**VKDA 40304 T**			PEUGEOT
344408	**VKDA 40304 T**			PEUGEOT
351004	**VKDA 40102 T**	**VKDP 43102 T**		AUDI / VW
351005		**VKDP 43101 T**		AUDI
351006	**VKDA 40113 T**	**VKDP 43101 T**		AUDI
351007		**VKDP 43101 T**		VW
351016	**VKDA 35116 T**	**VKDP 33111 T**	⚠	AUDI
351016	**VKDA 35118 T**	**VKDP 33111 T**	⚠	AUDI
351801	**VKDA 40407 T**			FORD
353010	**VKDA 40218 T**		⚠	FIAT
353010	**VKDA 40219 T**		⚠	FIAT
353013	**VKDA 40101 T**	**VKDP 43100 T**		VW
353014	**VKDA 40121 T**	**VKDP 43102 T**	⚠	AUDI
353014	**VKDA 40121 T**	**VKDP 43104 T**	⚠	AUDI
353014	**VKDA 40122 T**	**VKDP 43102 T**	⚠	AUDI
353014	**VKDA 40122 T**	**VKDP 43104 T**	⚠	AUDI
353016	**VKDA 40121 T**	**VKDP 43102 T**	⚠	AUDI
353016	**VKDA 40121 T**	**VKDP 43104 T**	⚠	AUDI
353016	**VKDA 40122 T**	**VKDP 43102 T**	⚠	AUDI
353016	**VKDA 40122 T**	**VKDP 43104 T**	⚠	AUDI
353022	**VKDA 40404 T**	**VKDP 44400 T**		FORD
353023		**VKDP 44400 T**		FORD
363001	**VKDC 35105 T**	**VKDP 33100 T**		VW
363016	**VKDC 35820 T**	**VKDP 33800 T**		BMW
363039	**VKDC 81105 T**			TOYOTA
363043	**VKDC 35103 T**	**VKDP 32103 T**	⚠	AUDI / VW
363043	**VKDC 35103 T**	**VKDP 33102 T**	⚠	AUDI / VW
363044	**VKDC 35801 T**	**VKDP 33800 T**		BMW
363059	**VKDC 81105 T**			TOYOTA
363060	**VKDC 81104 T**			TOYOTA
364002	**VKD 35001 T**			PEUGEOT / TALBOT
364011	**VKDA 35303 T**			PEUGEOT
364014	**VKDC 35100 T**	**VKDP 33100 T**	⚠	VW
364014	**VKDC 35101 T**	**VKDP 33100 T**	⚠	VW
364014	**VKDC 35102 T**	**VKDP 33100 T**	⚠	VW
364021	**VKDC 35801 T**	**VKDP 33800 T**		BMW
365006	**VKDC 35611 T**			VOLVO
365007		**VKDP 33501 T**		OPEL / VAUXHALL
365021	**VKDC 35801 T**	**VKDP 33800 T**		BMW
365024	**VKDC 35801 T**	**VKDP 33800 T**		BMW
365030	**VKD 35005 T**	**VKDP 33500 T**	⚠	OPEL / VAUXHALL
365030	VKDA 35513 T	**VKDP 33500 T**	⚠	OPEL / VAUXHALL
365041	**VKDC 81104 T**		⚠	TOYOTA
365041	**VKDC 81105 T**		⚠	TOYOTA
365042	**VKDC 35820 T**	**VKDP 33800 T**		BMW
365043	**VKDC 35801 T**	**VKDP 33800 T**		BMW
365053	**VKDA 35608 T**	**VKDP 33600 T**		VOLVO
365054	**VKD 35005 T**	**VKDP 33500 T**	⚠	OPEL / VAUXHALL
365054	VKDA 35513 T	**VKDP 33500 T**	⚠	OPEL / VAUXHALL
365057		**VKDP 33108 T**		LADA
365064	**VKDC 81102 T**		⚠	TOYOTA
365064	**VKDC 81104 T**		⚠	TOYOTA
365065	**VKD 35012 T**	**VKDP 33603 T**		VOLVO
365066	**VKDC 81104 T**			TOYOTA
365068	**VKDC 81102 T**			TOYOTA
365069	**VKDC 35801 T**	**VKDP 33800 T**		BMW
365071	**VKDA 35501 T**	**VKDP 33500 T**		OPEL / VAUXHALL
365081	**VKDC 81102 T**			TOYOTA
365082		**VKDP 33800 T**		BMW
365083	**VKDC 35801 T**	**VKDP 33800 T**		BMW
365500	**VKDC 35100 T**	**VKDP 33100 T**	⚠	AUDI / VW
365500	**VKDC 35100 T**	**VKDP 32103 T**	⚠	AUDI / VW
365501	**VKDC 35504 T**	**VKDP 33500 T**	⚠	DAEWOO / OPEL / VAUXHALL
365501	**VKDC 35505 T**	**VKDP 33500 T**	⚠	DAEWOO / OPEL / VAUXHALL
365502	**VKDA 35110 T**	**VKDP 33108 T**	⚠	VW
365502	**VKDA 35110 T**	**VKDP 33100 T**	⚠	VW
365502	**VKDC 35100 T**	**VKDP 33108 T**	⚠	VW
365502	**VKDC 35100 T**	**VKDP 33100 T**	⚠	VW
365502	**VKDC 35101 T**	**VKDP 33108 T**	⚠	VW
365502	**VKDC 35101 T**	**VKDP 33100 T**	⚠	VW
365504	**VKDA 35503 T**	**VKDP 33500 T**	⚠	OPEL / VAUXHALL
365504	**VKDA 35503 T**	**VKDP 33501 T**	⚠	OPEL / VAUXHALL
365504	**VKDA 35503 T**	**VKDP 34500 T**	⚠	OPEL / VAUXHALL
365504	**VKDA 35515 T**	**VKDP 33500 T**	⚠	OPEL / VAUXHALL
365504	**VKDA 35515 T**	**VKDP 33501 T**	⚠	OPEL / VAUXHALL
365504	**VKDA 35515 T**	**VKDP 34500 T**	⚠	OPEL / VAUXHALL
365506	**VKDA 35300 T**	**VKDP 33300 T**	⚠	CITROËN / PEUGEOT
365506	**VKDA 35300 T**	**VKDP 34303 T**	⚠	CITROËN / PEUGEOT
365506	**VKDA 35302 T**	**VKDP 33300 T**	⚠	CITROËN / PEUGEOT
365506	**VKDA 35302 T**	**VKDP 34303 T**	⚠	CITROËN / PEUGEOT
366002	**VKD 35021 T**	**VKDP 33104 T**	⚠	AUDI
366002	**VKD 35023 T**	**VKDP 33104 T**	⚠	AUDI
366005	**VKDC 35801 T**	**VKDP 33800 T**		BMW
366007	**VKDC 35801 T**	**VKDP 33800 T**		BMW
366008	**VKDC 35100 T**			AUDI
366009	**VKD 35032 T**	**VKDP 33406 T**		SAAB
366010	**VKD 35032 T**	**VKDP 33406 T**		SAAB
366012	**VKDA 35520 T**	**VKDP 33403 T**		SAAB
371004	**VKDC 35801 T**	**VKDP 33800 T**		BMW
373011	**VKDC 35820 T**	**VKDP 33800 T**		BMW
373012	**VKDC 35105 T**	**VKDP 33100 T**		VW
373019	**VKDC 35801 T**	**VKDP 33800 T**		BMW
373025	**VKDC 35103 T**	**VKDP 32103 T**	⚠	AUDI / VW
373025	**VKDC 35103 T**	**VKDP 33102 T**	⚠	AUDI / VW
374006	**VKDA 35110 T**	**VKDP 33100 T**	⚠	VW
374006	**VKDC 35100 T**	**VKDP 33100 T**	⚠	VW
374006	**VKDC 35101 T**	**VKDP 33100 T**	⚠	VW
374006	**VKDC 35102 T**	**VKDP 33100 T**	⚠	VW
374008	**VKDC 35801 T**	**VKDP 33800 T**		BMW
375008	**VKDC 35100 T**	**VKDP 33100 T**	⚠	AUDI / VW
375008	**VKDC 35100 T**	**VKDP 32103 T**	⚠	AUDI / VW
375009	**VKDC 35504 T**	**VKDP 33500 T**	⚠	DAEWOO / OPEL / VAUXHALL
375009	**VKDC 35505 T**	**VKDP 33500 T**	⚠	DAEWOO / OPEL / VAUXHALL
375020	**VKDC 35820 T**	**VKDP 33800 T**		BMW
375032	**VKDA 35501 T**	**VKDP 33500 T**		OPEL / VAUXHALL
375034	**VKDA 35503 T**	**VKDP 33500 T**	⚠	OPEL / VAUXHALL
375034	**VKDA 35503 T**	**VKDP 33501 T**	⚠	OPEL / VAUXHALL
375034	**VKDA 35503 T**	**VKDP 34500 T**	⚠	OPEL / VAUXHALL

							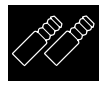		
375034	**VKDA 35515 T**	**VKDP 33500 T**	⚠	OPEL / VAUXHALL	553232	**VKDA 40104 T**	**VKDP 43106 T**		SKODA / VW
375034	**VKDA 35515 T**	**VKDP 33501 T**	⚠	OPEL / VAUXHALL	553239	**VKDA 40805 T**			BMW
375034	**VKDA 35515 T**	**VKDP 34500 T**	⚠	OPEL / VAUXHALL	553304	**VKDA 40104 T**	**VKDP 43106 T**		SEAT
375036	**VKDA 35300 T**	**VKDP 33300 T**	⚠	CITROËN / PEUGEOT	554025		**VKDP 43700 T**		AUDI
375036	**VKDA 35300 T**	**VKDP 34303 T**	⚠	CITROËN / PEUGEOT	631004	**VKDA 35603 T**	VKDP 32602 T	⚠	RENAULT
375036	**VKDA 35302 T**	**VKDP 33300 T**	⚠	CITROËN / PEUGEOT	631004	**VKDA 35604 T**	VKDP 32602 T	⚠	RENAULT
375036	**VKDA 35302 T**	**VKDP 34303 T**	⚠	CITROËN / PEUGEOT	632004		**VKDP 93401 T**		MAZDA
375037		**VKDP 33108 T**		LADA	632005		**VKDP 93401 T**		MAZDA
376001	**VKD 35021 T**	**VKDP 33104 T**	⚠	AUDI	632008		**VKDP 83201 T**		NISSAN
376001	**VKD 35023 T**	**VKDP 33104 T**	⚠	AUDI	632009		**VKDP 83201 T**		NISSAN
376003	**VKDC 35100 T**			AUDI	632011	**VKDA 88205 T**			NISSAN
441003		**VKDP 43101 T**		BMW	632012		**VKDP 83201 T**		NISSAN
441018		**VKDP 43101 T**		VW	632013		**VKDP 83201 T**		NISSAN
441019	**VKDA 40102 T**	**VKDP 43102 T**		AUDI / VW	632032		**VKDP 93401 T**		MAZDA
441022		**VKDP 43101 T**		AUDI	632033		**VKDP 93401 T**		MAZDA
441043		**VKDP 93201 T**		NISSAN	632034		**VKDP 93401 T**		MAZDA
441070		**VKDP 43700 T**		AUSTIN	632035		**VKDP 93401 T**		MAZDA
441072		**VKDP 43700 T**		AUSTIN / ROVER	632040	**VKDA 88202 T**			NISSAN
441073		**VKDP 43700 T**		AUSTIN	632041	**VKDA 88202 T**			NISSAN
441083	**VKDA 40113 T**	**VKDP 43101 T**		AUDI	632078	**VKDA 88205 T**			NISSAN
441102	**VKDA 40300 T**			PEUGEOT	632087	**VKDA 88401 T**	**VKDP 33401 T**		MAZDA
441103	**VKDA 40302 T**			PEUGEOT	632088	**VKDA 88401 T**	**VKDP 33401 T**		MAZDA
441104	**VKDA 40300 T**			PEUGEOT	632110	**VKDA 88401 T**			KIA / MAZDA
441800		**VKDP 43100 T**		SKODA	632111	**VKDA 88401 T**			KIA / MAZDA
441801	**VKDA 40407 T**			FORD	632116		**VKDP 33500 T**		CHEVROLET / DAEWOO
441900	**VKDA 40407 T**			FORD	632117		**VKDP 33500 T**		CHEVROLET / DAEWOO
441905	**VKDA 40101 T**	**VKDP 44100 T**		VW	632800	**VKDC 35202 T**	**VKDP 33203 T**		FIAT
441951	**VKDA 40407 T**	**VKDP 43400 T**		FORD	633009		**VKDP 31400 T**		FORD
443037	**VKD 35032 T**	**VKDP 33406 T**		SAAB	633010		**VKDP 81400 T**		MAZDA
443111		**VKDP 43700 T**		AUDI	633011		**VKDP 81400 T**		MAZDA
443164		**VKDP 43100 T**		VW	633019	**VKDA 37201 T**	**VKDP 31400 T**	⚠	FIAT
443165	**VKDA 40102 T**	**VKDP 43102 T**		AUDI / VW	633019	**VKDA 37204 T**	**VKDP 31400 T**	⚠	FIAT
443172		**VKDP 43101 T**		VW	633021	**VKDA 35303 T**	**VKDP 33300 T**		CITROËN / PEUGEOT / TALBOT
443207	**VKDA 40805 T**			BMW	633028		**VKDP 84402 T**		MAZDA
443209		**VKDP 43100 T**		VW	633029		**VKDP 84402 T**		MAZDA
443235	**VKDA 40101 T**	**VKDP 43100 T**		VW	633038	**VKDA 35403 T**	**VKDP 33409 T**		FORD
443236	**VKDA 40101 T**			VW	633040	**VKDA 81501 T**	**VKDP 81505 T**	⚠	MITSUBISHI
443246		**VKDP 43102 T**		VW	633040	**VKDA 81501 T**	**VKDP 83502 T**	⚠	MITSUBISHI
443271	**VKDA 40218 T**		⚠	FIAT	633040	**VKDA 81502 T**	**VKDP 81505 T**	⚠	MITSUBISHI
443271	**VKDA 40219 T**		⚠	FIAT	633040	**VKDA 81502 T**	**VKDP 83502 T**	⚠	MITSUBISHI
443276		**VKDP 43700 T**		ROVER	633041		**VKDP 93402 T**		MAZDA
443278	**VKDA 40407 T**			FORD	633046		**VKDP 83201 T**		NISSAN
443296	**VKDA 40101 T**			SEAT / VW	633047		**VKDP 83201 T**		NISSAN
443800	**VKDA 40101 T**	**VKDP 43100 T**		SEAT / VW	633048	**VKDA 37201 T**	**VKDP 31400 T**	⚠	FIAT
443801	**VKDA 40101 T**	**VKDP 43105 T**		SEAT	633048	**VKDA 37204 T**	**VKDP 31400 T**	⚠	FIAT
551001		**VKDP 43101 T**		BMW	633049		**VKDP 81400 T**		MAZDA
551002		**VKDP 43101 T**		AUDI	633050		**VKDP 81400 T**		MAZDA
551014		**VKDP 43101 T**		VW	633059	**VKDA 81501 T**	**VKDP 81505 T**	⚠	MITSUBISHI
551015	**VKDA 40102 T**	**VKDP 43102 T**		AUDI / VW	633059	**VKDA 81501 T**	**VKDP 83502 T**	⚠	MITSUBISHI
551020		**VKDP 43101 T**		AUDI	633059	**VKDA 81502 T**	**VKDP 81505 T**	⚠	MITSUBISHI
551038		**VKDP 43100 T**		VW	633059	**VKDA 81502 T**	**VKDP 83502 T**	⚠	MITSUBISHI
551039		**VKDP 43100 T**		VW	633059	**VKDC 81503 T**	**VKDP 81505 T**	⚠	MITSUBISHI
551055	**VKDA 40113 T**	**VKDP 43101 T**		AUDI	633059	**VKDC 81503 T**	**VKDP 83502 T**	⚠	MITSUBISHI
551056	**VKDA 40113 T**	**VKDP 43101 T**		AUDI	633069		**VKDP 84402 T**		MAZDA
551918	**VKDA 40616 T**			VOLVO	633070		**VKDP 84402 T**		MAZDA
553046		**VKDP 43400 T**		MAZDA	633076		**VKDP 81400 T**		MAZDA
553134	**VKDA 40218 T**		⚠	FIAT	633077		**VKDP 81400 T**		MAZDA
553134	**VKDA 40219 T**		⚠	FIAT	633078		**VKDP 93401 T**		MAZDA
553180	**VKDA 40805 T**			BMW	633079		**VKDP 93401 T**		MAZDA
553192	**VKDA 40805 T**			BMW	633080	**VKDA 35602 T**	VKDP 31606 T		RENAULT
553206	**VKDA 40104 T**	**VKDP 43106 T**		AUDI / SKODA / VW	633081	**VKDA 35602 T**	VKDP 31606 T		RENAULT
553207	**VKDA 40110 T**			AUDI / SKODA / VW	633082	**VKDA 35602 T**	VKDP 31606 T		RENAULT
					633088		**VKDP 93401 T**		MAZDA
					633089		**VKDP 93401 T**		MAZDA

KYB				.../...
633099	**VKDA 35403 T**		⚠	FORD
633099	**VKDA 35409 T**		⚠	FORD
633100	**VKDA 35403 T**		⚠	FORD
633100	**VKDA 35409 T**		⚠	FORD
633101	**VKD 35012 T**			AUSTIN / ROVER
633107		**VKDP 93401 T**		MAZDA
633108		**VKDP 93401 T**		MAZDA
633111		**VKDP 93401 T**		MAZDA
633112		**VKDP 93401 T**		MAZDA
633113		**VKDP 81400 T**		MAZDA
633114		**VKDP 81400 T**		MAZDA
633115	**VKDA 88203 T**		⚠	NISSAN
633115	**VKDA 88204 T**		⚠	NISSAN
633116	**VKDA 88203 T**		⚠	NISSAN
633116	**VKDA 88204 T**		⚠	NISSAN
633119	**VKDA 88203 T**			NISSAN
633120	**VKDA 88203 T**			NISSAN
633122	**VKD 35001 T**	**VKDP 33605 T**		VOLVO
633123	**VKD 35001 T**	**VKDP 33605 T**		VOLVO
633124	**VKD 35001 T**	**VKDP 33605 T**		VOLVO
633137		**VKDP 81400 T**		MAZDA
633138		**VKDP 81400 T**		MAZDA
633143		**VKDP 93401 T**		MAZDA
633144		**VKDP 93401 T**		MAZDA
633147	**VKDC 81504 T**			MITSUBISHI
633148	**VKDC 81504 T**			MITSUBISHI
633150		**VKDP 33401 T**		HYUNDAI
633193	**VKD 35012 T**			AUSTIN / ROVER
633706	**VKDA 35600 T**	**VKDP 31601 T**	⚠	RENAULT
633706	**VKDA 35601 T**	**VKDP 31601 T**	⚠	RENAULT
633707	**VKDA 35607 T**	**VKDP 31601 T**		RENAULT
633708	**VKDA 35607 T**	**VKDP 31601 T**		RENAULT
633712	**VKDA 35110 T**	**VKDP 33108 T**	⚠	SEAT / VW
633712	**VKDA 35110 T**	**VKDP 33107 T**	⚠	SEAT / VW
633712	**VKDA 35110 T**	**VKDP 33100 T**	⚠	SEAT / VW
633712	**VKDA 35110 T**	**VKDP 33800 T**	⚠	SEAT / VW
633712	**VKDA 35111 T**	**VKDP 33108 T**	⚠	SEAT / VW
633712	**VKDA 35111 T**	**VKDP 33107 T**	⚠	SEAT / VW
633712	**VKDA 35111 T**	**VKDP 33100 T**	⚠	SEAT / VW
633712	**VKDA 35111 T**	**VKDP 33800 T**	⚠	SEAT / VW
633712	**VKDA 35115 T**	**VKDP 33108 T**	⚠	SEAT / VW
633712	**VKDA 35115 T**	**VKDP 33107 T**	⚠	SEAT / VW
633712	**VKDA 35115 T**	**VKDP 33100 T**	⚠	SEAT / VW
633712	**VKDA 35115 T**	**VKDP 33800 T**	⚠	SEAT / VW
633712	**VKDC 35101 T**	**VKDP 33108 T**	⚠	SEAT / VW
633712	**VKDC 35101 T**	**VKDP 33107 T**	⚠	SEAT / VW
633712	**VKDC 35101 T**	**VKDP 33100 T**	⚠	SEAT / VW
633712	**VKDC 35101 T**	**VKDP 33800 T**	⚠	SEAT / VW
633712	**VKDC 35102 T**	**VKDP 33108 T**	⚠	SEAT / VW
633712	**VKDC 35102 T**	**VKDP 33107 T**	⚠	SEAT / VW
633712	**VKDC 35102 T**	**VKDP 33100 T**	⚠	SEAT / VW
633712	**VKDC 35102 T**	**VKDP 33800 T**	⚠	SEAT / VW
633713	**VKDA 35113 T**	**VKDP 33101 T**		SEAT / SKODA / VW
633717	**VKDA 35619 T**	**VKDP 31602 T**		RENAULT
633718	**VKDA 35625 T**	**VKDP 31603 T**		RENAULT
633801	**VKDA 35403 T**	**VKDP 31400 T**	⚠	FORD
633801	**VKDA 35409 T**	**VKDP 31400 T**	⚠	FORD
633802	**VKDA 35403 T**	**VKDP 31400 T**	⚠	FORD
633802	**VKDA 35409 T**	**VKDP 31400 T**	⚠	FORD
633803	**VKDA 35403 T**	**VKDP 31400 T**	⚠	FORD
633803	**VKDA 35409 T**	**VKDP 31400 T**	⚠	FORD
633804	**VKDA 35602 T**	VKDP 31606 T		RENAULT
633805	**VKDA 35602 T**	VKDP 31606 T		RENAULT
633806	**VKDA 35602 T**	VKDP 31606 T		RENAULT
633807	**VKD 35001 T**	**VKDP 32600 T**		RENAULT
633808	**VKDA 35615 T**	**VKDP 32600 T**	⚠	RENAULT
633808	**VKDA 35616 T**	**VKDP 32600 T**	⚠	RENAULT
633812	**VKDA 35702 T**	**VKDP 32103 T**	⚠	SEAT
633812	**VKDA 37201 T**	**VKDP 32103 T**	⚠	SEAT
633813	**VKDA 35702 T**	**VKDP 32103 T**	⚠	SEAT
633813	**VKDA 37201 T**	**VKDP 32103 T**	⚠	SEAT
633817	**VKDA 35403 T**	**VKDP 31400 T**		FORD
633818	**VKDA 35403 T**	**VKDP 31400 T**	⚠	FORD
633818	**VKDA 35403 T**	**VKDP 33401 T**	⚠	FORD
633818	**VKDA 35407 T**	**VKDP 31400 T**	⚠	FORD
633818	**VKDA 35407 T**	**VKDP 33401 T**	⚠	FORD
633820	**VKDA 35401 T**	**VKDP 33401 T**	⚠	FORD
633820	**VKDA 35405 T**	**VKDP 33401 T**	⚠	FORD
633821	**VKDA 35401 T**	**VKDP 33401 T**	⚠	FORD
633821	**VKDA 35401 T**	**VKDP 31400 T**	⚠	FORD
633821	**VKDA 35405 T**	**VKDP 33401 T**	⚠	FORD
633821	**VKDA 35405 T**	**VKDP 31400 T**	⚠	FORD
633822	**VKDA 35403 T**	**VKDP 31400 T**		FORD
633824	**VKDA 35600 T**	**VKDP 31601 T**	⚠	RENAULT
633824	**VKDA 35601 T**	**VKDP 31601 T**	⚠	RENAULT
633825	**VKDA 35600 T**	**VKDP 31601 T**	⚠	RENAULT
633825	**VKDA 35601 T**	**VKDP 31601 T**	⚠	RENAULT
633827	**VKD 35001 T**	**VKDP 32600 T**	⚠	RENAULT
633827	**VKDA 35615 T**	**VKDP 32600 T**	⚠	RENAULT
633828	**VKDA 35303 T**	**VKDP 33300 T**		CITROËN / PEUGEOT
633829	**VKDA 35303 T**	**VKDP 33300 T**	⚠	PEUGEOT
633829	**VKDA 35304 T**	**VKDP 33300 T**	⚠	PEUGEOT
633829	**VKDA 35305 T**	**VKDP 33300 T**	⚠	PEUGEOT
633830	**VKDA 35303 T**	**VKDP 33300 T**		PEUGEOT
633831	**VKDA 35500 T**	**VKDP 33500 T**	⚠	OPEL / VAUXHALL
633831	**VKDA 35509 T**	**VKDP 33500 T**	⚠	OPEL / VAUXHALL
633832	**VKDA 35403 T**	**VKDP 33409 T**		FORD
633833	**VKDA 37202 T**	**VKDP 31400 T**		FIAT
633834	**VKDA 35403 T**	**VKDP 31400 T**	⚠	FORD
633834	**VKDA 35409 T**	**VKDP 31400 T**	⚠	FORD
633835	**VKDA 35112 T**	**VKDP 33203 T**	⚠	SKODA
633835	**VKDA 35112 T**	**VKDP 33110 T**	⚠	SKODA
633836	**VKDA 35306 T**	**VKDP 33300 T**	⚠	CITROËN
633836	**VKDA 35307 T**	**VKDP 33300 T**	⚠	CITROËN
633837	**VKDA 35306 T**	**VKDP 33300 T**	⚠	CITROËN
633837	**VKDA 35307 T**	**VKDP 33300 T**	⚠	CITROËN
633838	**VKD 35002 T**	**VKDP 33300 T**	⚠	CITROËN / PEUGEOT
633838	**VKD 35002 T**	**VKDP 33311 T**	⚠	CITROËN / PEUGEOT
633838	**VKDA 35306 T**	**VKDP 33300 T**	⚠	CITROËN / PEUGEOT
633838	**VKDA 35306 T**	**VKDP 33311 T**	⚠	CITROËN / PEUGEOT
633838	**VKDA 35307 T**	**VKDP 33300 T**	⚠	CITROËN / PEUGEOT
633838	**VKDA 35307 T**	**VKDP 33311 T**	⚠	CITROËN / PEUGEOT
633838	**VKDA 35313 T**	**VKDP 33300 T**	⚠	CITROËN / PEUGEOT
633838	**VKDA 35313 T**	**VKDP 33311 T**	⚠	CITROËN / PEUGEOT
633839	**VKD 35002 T**	**VKDP 33300 T**	⚠	CITROËN / PEUGEOT
633839	**VKD 35002 T**	**VKDP 33311 T**	⚠	CITROËN / PEUGEOT
633839	**VKDA 35306 T**	**VKDP 33300 T**	⚠	CITROËN / PEUGEOT
633839	**VKDA 35306 T**	**VKDP 33311 T**	⚠	CITROËN / PEUGEOT
633839	**VKDA 35307 T**	**VKDP 33300 T**	⚠	CITROËN /

				PEUGEOT
633839	**VKDA 35307 T**	**VKDP 33311 T**	⚠	CITROËN / PEUGEOT
633839	**VKDA 35313 T**	**VKDP 33300 T**	⚠	CITROËN / PEUGEOT
633839	**VKDA 35313 T**	**VKDP 33311 T**	⚠	CITROËN / PEUGEOT
633840	**VKDA 35702 T**	**VKDP 32103 T**	⚠	SEAT
633840	**VKDA 37201 T**	**VKDP 32103 T**	⚠	SEAT
633847	**VKDA 35602 T**	VKDP 31606 T		RENAULT
633848	**VKDA 35607 T**	**VKDP 31601 T**		RENAULT
633850		**VKDP 31400 T**		LANCIA
633851		**VKDP 31400 T**		LANCIA
633873	**VKDA 37203 T**			FIAT
633902	**VKDA 35319 T**	**VKDP 33308 T**		PEUGEOT
633903	**VKDA 35319 T**	**VKDP 33308 T**		PEUGEOT
633921	**VKDA 35306 T**	**VKDP 33300 T**	⚠	CITROËN
633921	**VKDA 35307 T**	**VKDP 33300 T**	⚠	CITROËN
633922	**VKDA 35306 T**	**VKDP 33300 T**	⚠	CITROËN
633922	**VKDA 35307 T**	**VKDP 33300 T**	⚠	CITROËN
633925	**VKDA 35312 T**	**VKDP 32302 T**	⚠	PEUGEOT
633925	**VKDA 35312 T**	**VKDP 33308 T**	⚠	PEUGEOT
633926	**VKDA 35312 T**	**VKDP 32302 T**	⚠	PEUGEOT
633926	**VKDA 35312 T**	**VKDP 33308 T**	⚠	PEUGEOT
633927	**VKDA 35312 T**	**VKDP 33308 T**		PEUGEOT
633928	**VKDA 35312 T**	**VKDP 33308 T**		PEUGEOT
633929	**VKDA 35308 T**	**VKDP 32301 T**	⚠	PEUGEOT
633929	**VKDA 35308 T**	**VKDP 33303 T**	⚠	PEUGEOT
633929	**VKDA 35308 T**	**VKDP 33306 T**	⚠	PEUGEOT
633929	**VKDA 35309 T**	**VKDP 32301 T**	⚠	PEUGEOT
633929	**VKDA 35309 T**	**VKDP 33303 T**	⚠	PEUGEOT
633929	**VKDA 35309 T**	**VKDP 33306 T**	⚠	PEUGEOT
633930	**VKDA 35308 T**	**VKDP 32301 T**	⚠	PEUGEOT
633930	**VKDA 35308 T**	**VKDP 33303 T**	⚠	PEUGEOT
633930	**VKDA 35308 T**	**VKDP 33306 T**	⚠	PEUGEOT
633930	**VKDA 35309 T**	**VKDP 32301 T**	⚠	PEUGEOT
633930	**VKDA 35309 T**	**VKDP 33303 T**	⚠	PEUGEOT
633930	**VKDA 35309 T**	**VKDP 33306 T**	⚠	PEUGEOT
633931	**VKDA 35308 T**	**VKDP 32301 T**	⚠	PEUGEOT
633931	**VKDA 35309 T**	**VKDP 32301 T**	⚠	PEUGEOT
633951	**VKDA 35702 T**	**VKDP 33800 T**	⚠	FIAT / SEAT
633951	**VKDA 37201 T**	**VKDP 33800 T**	⚠	FIAT / SEAT
633960	**VKDA 35319 T**	**VKDP 33308 T**		PEUGEOT
633961	**VKDA 35319 T**	**VKDP 33308 T**		PEUGEOT
634001		**VKDP 81505 T**		MITSUBISHI
634010	**VKDA 35303 T**	**VKDP 33300 T**		CITROËN / PEUGEOT
634011	**VKDA 35303 T**	**VKDP 33300 T**		CITROËN / PEUGEOT
634015	**VKDA 35400 T**	**VKDP 33405 T**	⚠	FORD
634015	**VKDA 35416 T**	**VKDP 33405 T**	⚠	FORD
634021	**VKDA 35510 T**	**VKDP 33504 T**	⚠	OPEL / VAUXHALL
634021	**VKDA 35511 T**	**VKDP 33504 T**	⚠	OPEL / VAUXHALL
634022	**VKDA 35510 T**	**VKDP 33504 T**	⚠	OPEL / VAUXHALL
634022	**VKDA 35511 T**	**VKDP 33504 T**	⚠	OPEL / VAUXHALL
634024		**VKDP 84401 T**		MAZDA
634025		**VKDP 84401 T**		MAZDA
634027	**VKDC 81201 T**			NISSAN
634028	**VKDC 81201 T**			NISSAN
634029	**VKDC 81503 T**	**VKDP 83503 T**	⚠	MITSUBISHI
634029	**VKDC 81503 T**	**VKDP 83502 T**	⚠	MITSUBISHI
634042	**VKDC 81505 T**			HYUNDAI / KIA / MITSUBISHI
634043	**VKDC 81505 T**			HYUNDAI / MITSUBISHI
634050	**VKDC 81503 T**			HYUNDAI
634802	**VKDA 35623 T**	**VKDP 32601 T**		RENAULT
634807	**VKDA 35623 T**	**VKDP 32601 T**		RENAULT
634810	**VKDA 35110 T**	**VKDP 33100 T**	⚠	SEAT / VW
634810	**VKDA 35110 T**	**VKDP 33107 T**	⚠	SEAT / VW
634810	**VKDA 35110 T**	**VKDP 33108 T**	⚠	SEAT / VW
634810	**VKDA 35115 T**	**VKDP 33100 T**	⚠	SEAT / VW
634810	**VKDA 35115 T**	**VKDP 33107 T**	⚠	SEAT / VW
634810	**VKDA 35115 T**	**VKDP 33108 T**	⚠	SEAT / VW
634810	**VKDC 35101 T**	**VKDP 33100 T**	⚠	SEAT / VW
634810	**VKDC 35101 T**	**VKDP 33107 T**	⚠	SEAT / VW
634810	**VKDC 35101 T**	**VKDP 33108 T**	⚠	SEAT / VW
634810	**VKDC 35102 T**	**VKDP 33100 T**	⚠	SEAT / VW
634810	**VKDC 35102 T**	**VKDP 33107 T**	⚠	SEAT / VW
634810	**VKDC 35102 T**	**VKDP 33108 T**	⚠	SEAT / VW
634811	**VKDA 35110 T**	**VKDP 33100 T**	⚠	VW
634811	**VKDA 35110 T**	**VKDP 33108 T**	⚠	VW
634811	**VKDC 35100 T**	**VKDP 33100 T**	⚠	VW
634811	**VKDC 35100 T**	**VKDP 33108 T**	⚠	VW
634811	**VKDC 35101 T**	**VKDP 33100 T**	⚠	VW
634811	**VKDC 35101 T**	**VKDP 33108 T**	⚠	VW
634812	**VKDA 35113 T**	**VKDP 33101 T**		AUDI / SEAT / SKODA / VW
634814	**VKDA 35626 T**	**VKDP 31609 T**		RENAULT
634908	**VKDC 35634 T**	**VKDP 33500 T**		VOLVO
634927	**VKDA 35317 T**	**VKDP 33301 T**		CITROËN / FIAT / LANCIA / PEUGEOT
634928	**VKDA 35317 T**	**VKDP 33301 T**		CITROËN / FIAT / PEUGEOT
634929	**VKDA 35615 T**	**VKDP 32600 T**		RENAULT
635800	**VKDA 35415 T**			FORD
635850	**VKD 35016 T**	**VKDP 33311 T**		CITROËN / FIAT / PEUGEOT
635851	**VKD 35016 T**	**VKDP 33311 T**		CITROËN / FIAT / PEUGEOT
635852	**VKDA 35313 T**	**VKDP 33311 T**		CITROËN / FIAT / PEUGEOT
635853	**VKDA 35313 T**	**VKDP 33311 T**		CITROËN / FIAT / PEUGEOT
635900	**VKDA 35603 T**	VKDP 32602 T	⚠	RENAULT
635900	**VKDA 35604 T**	VKDP 32602 T	⚠	RENAULT
635901	**VKDA 35603 T**	VKDP 32602 T	⚠	RENAULT
635901	**VKDA 35604 T**	VKDP 32602 T	⚠	RENAULT
635902	**VKDA 35603 T**	VKDP 32602 T	⚠	RENAULT
635902	**VKDA 35604 T**	VKDP 32602 T	⚠	RENAULT
635903	**VKDA 35603 T**	VKDP 32602 T	⚠	RENAULT
635903	**VKDA 35604 T**	VKDP 32602 T	⚠	RENAULT
663002	**VKDC 35820 T**	**VKDP 33800 T**		BMW
663009	**VKDC 35105 T**	**VKDP 33100 T**		VW
663035	**VKDC 35103 T**	**VKDP 32103 T**	⚠	AUDI / VW
663035	**VKDC 35103 T**	**VKDP 33102 T**	⚠	AUDI / VW
663045	**VKDC 81105 T**			TOYOTA
663500	**VKDC 35801 T**	**VKDP 33800 T**		BMW
664008	**VKD 35001 T**			PEUGEOT / TALBOT
664010	**VKDA 35303 T**			PEUGEOT
664014	**VKDA 35110 T**	**VKDP 33100 T**	⚠	VW
664014	**VKDC 35100 T**	**VKDP 33100 T**	⚠	VW
664014	**VKDC 35101 T**	**VKDP 33100 T**	⚠	VW
664014	**VKDC 35102 T**	**VKDP 33100 T**	⚠	VW
665001		**VKDP 33800 T**		BMW
665008	**VKDC 35611 T**			VOLVO
665010	**VKD 35012 T**	**VKDP 33603 T**		VOLVO
665030	**VKDC 35100 T**	**VKDP 33100 T**	⚠	AUDI / VW
665030	**VKDC 35100 T**	**VKDP 32103 T**	⚠	AUDI / VW
665035		**VKDP 33501 T**		OPEL / VAUXHALL
665036	**VKDC 35504 T**	**VKDP 33500 T**	⚠	DAEWOO / OPEL / VAUXHALL
665036	**VKDC 35505 T**	**VKDP 33500 T**	⚠	DAEWOO / OPEL / VAUXHALL

KYB .../...

665042	**VKD 35005 T**	**VKDP 33500 T**	⚠	OPEL / VAUXHALL
665042	VKDA 35513 T	**VKDP 33500 T**	⚠	OPEL / VAUXHALL
665046	**VKDC 81105 T**			TOYOTA
665047	**VKDC 81104 T**		⚠	TOYOTA
665047	**VKDC 81105 T**		⚠	TOYOTA
665048	**VKDC 35820 T**	**VKDP 33800 T**		BMW
665049	**VKDC 35801 T**	**VKDP 33800 T**		BMW
665050	**VKDC 35801 T**	**VKDP 33800 T**		BMW
665055	**VKDA 35608 T**	**VKDP 33600 T**		VOLVO
665056		**VKDP 33501 T**		OPEL / VAUXHALL
665057	**VKD 35005 T**	**VKDP 33500 T**	⚠	OPEL / VAUXHALL
665057	VKDA 35513 T	**VKDP 33500 T**	⚠	OPEL / VAUXHALL
665059		**VKDP 33108 T**		LADA
665063	**VKDA 35501 T**	**VKDP 33500 T**		OPEL / VAUXHALL
665064	**VKDA 35110 T**	**VKDP 33100 T**	⚠	VW
665064	**VKDA 35110 T**	**VKDP 33108 T**	⚠	VW
665064	**VKDC 35100 T**	**VKDP 33100 T**	⚠	VW
665064	**VKDC 35100 T**	**VKDP 33108 T**	⚠	VW
665064	**VKDC 35101 T**	**VKDP 33100 T**	⚠	VW
665064	**VKDC 35101 T**	**VKDP 33108 T**	⚠	VW
665065	**VKD 35001 T**			PEUGEOT
665501	**VKDA 35503 T**	**VKDP 33500 T**	⚠	OPEL / VAUXHALL
665501	**VKDA 35503 T**	**VKDP 33501 T**	⚠	OPEL / VAUXHALL
665501	**VKDA 35503 T**	**VKDP 34500 T**	⚠	OPEL / VAUXHALL
665501	**VKDA 35515 T**	**VKDP 33500 T**	⚠	OPEL / VAUXHALL
665501	**VKDA 35515 T**	**VKDP 33501 T**	⚠	OPEL / VAUXHALL
665501	**VKDA 35515 T**	**VKDP 34500 T**	⚠	OPEL / VAUXHALL
665502	**VKDA 35300 T**	**VKDP 33300 T**	⚠	CITROËN / PEUGEOT
665502	**VKDA 35300 T**	**VKDP 34303 T**	⚠	CITROËN / PEUGEOT
665502	**VKDA 35302 T**	**VKDP 33300 T**	⚠	CITROËN / PEUGEOT
665502	**VKDA 35302 T**	**VKDP 34303 T**	⚠	CITROËN / PEUGEOT
666001	**VKD 35021 T**	**VKDP 33104 T**	⚠	AUDI
666001	**VKD 35023 T**	**VKDP 33104 T**	⚠	AUDI

MONROE

10024	**VKDC 35202 T**	**VKDP 33203 T**		FIAT
10053	**VKDC 35202 T**	**VKDP 33203 T**		FIAT
11006	**VKDA 35403 T**	**VKDP 31400 T**	⚠	FORD
11006	**VKDA 35409 T**	**VKDP 31400 T**	⚠	FORD
11011	**VKDA 37201 T**	**VKDP 31400 T**	⚠	FIAT / SEAT / ZASTAVA
11011	**VKDA 37204 T**	**VKDP 31400 T**	⚠	FIAT / SEAT / ZASTAVA
11017	**VKDC 35207 T**			LANCIA
11020	**VKDA 35403 T**	**VKDP 31400 T**	⚠	FORD
11020	**VKDA 35409 T**	**VKDP 31400 T**	⚠	FORD
11031	**VKDA 35403 T**	**VKDP 33409 T**		FORD
11036	**VKD 35001 T**	**VKDP 32600 T**		RENAULT
11038	**VKDA 35702 T**	**VKDP 33800 T**	⚠	FIAT / SEAT
11038	**VKDA 37201 T**	**VKDP 33800 T**	⚠	FIAT / SEAT
11039		**VKDP 83201 T**		NISSAN
11040		**VKDP 81400 T**		MAZDA
11045	**VKDA 37204 T**	**VKDP 31400 T**		FIAT
11047	**VKDA 35403 T**	**VKDP 31400 T**	⚠	FORD
11047	**VKDA 35409 T**	**VKDP 31400 T**	⚠	FORD
11048	**VKDA 35403 T**			FORD
11050		**VKDP 33500 T**		OPEL/VAUXHALL
11054		**VKDP 84402 T**		MAZDA
11055		**VKDP 84402 T**		MAZDA
11060	**VKD 35012 T**			AUSTIN / ROVER
11061	**VKDA 35403 T**	**VKDP 31400 T**	⚠	FORD
11061	**VKDA 35409 T**	**VKDP 31400 T**	⚠	FORD
11062	**VKDA 35702 T**	**VKDP 32103 T**	⚠	SEAT
11062	**VKDA 37201 T**	**VKDP 32103 T**	⚠	SEAT
11063	**VKDA 35702 T**	**VKDP 32103 T**	⚠	SEAT
11063	**VKDA 37201 T**	**VKDP 32103 T**	⚠	SEAT
11066	**VKDA 81501 T**	**VKDP 81505 T**	⚠	MITSUBISHI
11066	**VKDA 81501 T**	**VKDP 83502 T**	⚠	MITSUBISHI
11066	**VKDA 81502 T**	**VKDP 81505 T**	⚠	MITSUBISHI
11066	**VKDA 81502 T**	**VKDP 83502 T**	⚠	MITSUBISHI
11068	**VKDA 88205 T**			NISSAN
11069		**VKDP 93402 T**		MAZDA
11070		**VKDP 93402 T**		MAZDA
11077	**VKDA 35403 T**	**VKDP 33409 T**		FORD
11081	**VKDA 35602 T**	VKDP 31606 T		RENAULT
11082	**VKD 35012 T**			AUSTIN / ROVER
11085		**VKDP 93401 T**		MAZDA
11086		**VKDP 93401 T**		MAZDA
11087	**VKDA 35403 T**	**VKDP 31400 T**	⚠	FORD
11087	**VKDA 35409 T**	**VKDP 31400 T**	⚠	FORD
11088	**VKDA 35602 T**	VKDP 31606 T		RENAULT
11091	**VKDA 35602 T**	VKDP 31606 T		RENAULT
11093	**VKDA 35201 T**	**VKDP 33800 T**		ALFA ROMEO
11094	**VKDA 35201 T**	**VKDP 33800 T**		ALFA ROMEO
11095	**VKDA 35702 T**	**VKDP 32103 T**	⚠	SEAT
11095	**VKDA 37201 T**	**VKDP 32103 T**	⚠	SEAT
11097	**VKDA 88202 T**	**VKDP 83201 T**	⚠	NISSAN
11097	**VKDA 88203 T**	**VKDP 83201 T**	⚠	NISSAN
11097	**VKDA 88204 T**	**VKDP 83201 T**	⚠	NISSAN
11101		**VKDP 31400 T**		AUTOBIANCHI / LANCIA
11102		**VKDP 31400 T**		AUTOBIANCHI / LANCIA
11103	**VKDA 81501 T**	**VKDP 81505 T**	⚠	MITSUBISHI
11103	**VKDA 81501 T**	**VKDP 83502 T**	⚠	MITSUBISHI
11103	**VKDA 81502 T**	**VKDP 81505 T**	⚠	MITSUBISHI
11103	**VKDA 81502 T**	**VKDP 83502 T**	⚠	MITSUBISHI
11108	**VKDA 37202 T**	**VKDP 31400 T**	⚠	FIAT
11108	**VKDA 37203 T**	**VKDP 31400 T**	⚠	FIAT
11109	**VKDA 35201 T**	**VKDP 33800 T**		ALFA ROMEO
11110	**VKDA 35201 T**	**VKDP 33800 T**		ALFA ROMEO
11111	**VKDA 37202 T**	**VKDP 31400 T**		FIAT
11114	**VKDA 35615 T**	**VKDP 32600 T**	⚠	RENAULT
11114	**VKDA 35616 T**	**VKDP 32600 T**	⚠	RENAULT
11117	**VKDA 35403 T**	**VKDP 31400 T**	⚠	FORD
11117	**VKDA 35409 T**	**VKDP 31400 T**	⚠	FORD
11118	**VKDA 35403 T**	**VKDP 31400 T**	⚠	FORD
11118	**VKDA 35403 T**	**VKDP 33401 T**	⚠	FORD
11118	**VKDA 35406 T**	**VKDP 31400 T**	⚠	FORD
11118	**VKDA 35406 T**	**VKDP 33401 T**	⚠	FORD
11118	**VKDA 35407 T**	**VKDP 31400 T**	⚠	FORD
11118	**VKDA 35407 T**	**VKDP 33401 T**	⚠	FORD
11119	**VKDA 88401 T**			MAZDA
11120	**VKDA 37202 T**	**VKDP 31400 T**		FIAT
11121	**VKDA 35702 T**	**VKDP 33800 T**	⚠	SEAT
11121	**VKDA 37201 T**	**VKDP 33800 T**	⚠	SEAT
11122	**VKDA 35602 T**	VKDP 31606 T		RENAULT
11123	**VKDA 35110 T**	**VKDP 33100 T**	⚠	SEAT / VW
11123	**VKDC 35101 T**	**VKDP 33100 T**	⚠	SEAT / VW
11123	**VKDC 35102 T**	**VKDP 33100 T**	⚠	SEAT / VW
11126	**VKD 35001 T**	**VKDP 33605 T**		VOLVO
11127	**VKDA 35702 T**	**VKDP 32103 T**	⚠	SEAT
11127	**VKDA 37201 T**	**VKDP 32103 T**	⚠	SEAT
11128	**VKDA 35201 T**	**VKDP 33800 T**		ALFA ROMEO
11129	**VKDA 35201 T**	**VKDP 33800 T**		ALFA ROMEO
11133		**VKDP 93401 T**		MAZDA
11134		**VKDP 93401 T**		MAZDA

11135	**VKDA 35401 T**	**VKDP 33401 T**	⚠	FORD
11135	**VKDA 35405 T**	**VKDP 33401 T**	⚠	FORD
11136	**VKDA 35401 T**	**VKDP 33401 T**		FORD
11138	**VKDA 35401 T**	**VKDP 33401 T**	⚠	FORD
11138	**VKDA 35405 T**	**VKDP 33401 T**	⚠	FORD
11143	**VKDA 88203 T**		⚠	NISSAN
11143	**VKDA 88204 T**		⚠	NISSAN
11144	**VKDA 88203 T**		⚠	NISSAN
11144	**VKDA 88204 T**		⚠	NISSAN
11148		**VKDP 81400 T**		MAZDA
11152	**VKDA 37202 T**	**VKDP 31400 T**	⚠	FIAT
11152	**VKDA 37203 T**	**VKDP 31400 T**	⚠	FIAT
11153	**VKD 35001 T**	**VKDP 33605 T**		VOLVO
11154	**VKDA 35403 T**			FORD
11163	**VKDA 35110 T**	**VKDP 33108 T**	⚠	SEAT / VW
11163	**VKDA 35110 T**	**VKDP 33100 T**	⚠	SEAT / VW
11163	**VKDA 35110 T**	**VKDP 33107 T**	⚠	SEAT / VW
11163	**VKDC 35101 T**	**VKDP 33108 T**	⚠	SEAT / VW
11163	**VKDC 35101 T**	**VKDP 33100 T**	⚠	SEAT / VW
11163	**VKDC 35101 T**	**VKDP 33107 T**	⚠	SEAT / VW
11163	**VKDC 35102 T**	**VKDP 33108 T**	⚠	SEAT / VW
11163	**VKDC 35102 T**	**VKDP 33100 T**	⚠	SEAT / VW
11163	**VKDC 35102 T**	**VKDP 33107 T**	⚠	SEAT / VW
11166	**VKDA 88401 T**			MAZDA
11167		**VKDP 33401 T**		HYUNDAI
11169	**VKDA 37201 T**	**VKDP 33800 T**		FIAT
11170	**VKDC 81503 T**		⚠	MITSUBISHI
11170	**VKDC 81504 T**		⚠	MITSUBISHI
11171	**VKDC 81503 T**		⚠	MITSUBISHI
11171	**VKDC 81504 T**		⚠	MITSUBISHI
11174	**VKDA 35403 T**	**VKDP 31400 T**	⚠	FORD
11174	**VKDA 35409 T**	**VKDP 31400 T**	⚠	FORD
11189	**VKDA 35600 T**	**VKDP 31600 T**		RENAULT
11190	**VKDA 35600 T**	**VKDP 31601 T**	⚠	RENAULT
11190	**VKDA 35601 T**	**VKDP 31601 T**	⚠	RENAULT
11191	**VKDA 35600 T**	**VKDP 31601 T**	⚠	RENAULT
11191	**VKDA 35601 T**	**VKDP 31601 T**	⚠	RENAULT
11194	**VKDC 35203 T**	**VKDP 31200 T**		FIAT
11195	**VKDA 35403 T**	**VKDP 31400 T**	⚠	FORD
11195	**VKDA 35403 T**	**VKDP 33401 T**	⚠	FORD
11195	**VKDA 35407 T**	**VKDP 31400 T**	⚠	FORD
11195	**VKDA 35407 T**	**VKDP 33401 T**	⚠	FORD
11196	**VKDA 35403 T**	**VKDP 31400 T**	⚠	FORD
11196	**VKDA 35403 T**	**VKDP 33401 T**	⚠	FORD
11196	**VKDA 35406 T**	**VKDP 31400 T**	⚠	FORD
11196	**VKDA 35406 T**	**VKDP 33401 T**	⚠	FORD
11196	**VKDA 35407 T**	**VKDP 31400 T**	⚠	FORD
11196	**VKDA 35407 T**	**VKDP 33401 T**	⚠	FORD
11202	**VKDA 35111 T**	**VKDP 33800 T**	⚠	SEAT / VW
11202	**VKDA 35111 T**	**VKDP 33107 T**	⚠	SEAT / VW
11202	**VKDA 35115 T**	**VKDP 33800 T**	⚠	SEAT / VW
11202	**VKDA 35115 T**	**VKDP 33107 T**	⚠	SEAT / VW
11236		**VKDP 33401 T**		HYUNDAI
11237		**VKDP 33401 T**		HYUNDAI
11250	**VKDA 35110 T**	**VKDP 33100 T**	⚠	SEAT / VW
11250	**VKDA 35110 T**	**VKDP 33107 T**	⚠	SEAT / VW
11250	**VKDA 35110 T**	**VKDP 33108 T**	⚠	SEAT / VW
11250	**VKDA 35115 T**	**VKDP 33100 T**	⚠	SEAT / VW
11250	**VKDA 35115 T**	**VKDP 33107 T**	⚠	SEAT / VW
11250	**VKDA 35115 T**	**VKDP 33108 T**	⚠	SEAT / VW
11250	**VKDC 35101 T**	**VKDP 33100 T**	⚠	SEAT / VW
11250	**VKDC 35101 T**	**VKDP 33107 T**	⚠	SEAT / VW
11250	**VKDC 35101 T**	**VKDP 33108 T**	⚠	SEAT / VW
11250	**VKDC 35102 T**	**VKDP 33100 T**	⚠	SEAT / VW
11250	**VKDC 35102 T**	**VKDP 33107 T**	⚠	SEAT / VW
11250	**VKDC 35102 T**	**VKDP 33108 T**	⚠	SEAT / VW
11260		**VKDP 93401 T**		MAZDA
11261		**VKDP 93401 T**		MAZDA

11272	**VKDA 35607 T**	**VKDP 31601 T**		RENAULT
11273	**VKDA 35607 T**	**VKDP 31601 T**		RENAULT
11285	**VKDA 35607 T**	**VKDP 31601 T**		NISSAN / RENAULT
11324		**VKDP 33107 T**		MAZDA
11325		**VKDP 33107 T**		MAZDA
11377		**VKDP 33500 T**		DAEWOO
11378		**VKDP 33500 T**		DAEWOO
11434	**VKDA 35304 T**	**VKDP 33300 T**	⚠	PEUGEOT
11434	**VKDA 35305 T**	**VKDP 33300 T**	⚠	PEUGEOT
11502	**VKDA 35303 T**	**VKDP 33300 T**		CITROËN / PEUGEOT / TALBOT
11504	**VKDA 35303 T**			PEUGEOT
11505	**VKDA 35303 T**	**VKDP 33300 T**		CITROËN / PEUGEOT
11509	**VKDA 35303 T**	**VKDP 33300 T**		CITROËN / PEUGEOT
11510	**VKDA 35303 T**	**VKDP 33300 T**		CITROËN / PEUGEOT
11521	**VKDA 35603 T**	VKDP 32602 T	⚠	RENAULT
11521	**VKDA 35604 T**	VKDP 32602 T	⚠	RENAULT
11521	**VKDA 35605 T**	VKDP 32602 T	⚠	RENAULT
11522	**VKDA 35303 T**	**VKDP 33300 T**		CITROËN / PEUGEOT
11526	**VKDC 81201 T**			NISSAN
11527	**VKDC 81201 T**			NISSAN
11528	**VKDA 35510 T**	**VKDP 33504 T**	⚠	OPEL/VAUXHALL
11528	**VKDA 35511 T**	**VKDP 33504 T**	⚠	OPEL/VAUXHALL
11530	**VKDA 40218 T**			FIAT
11541	**VKDA 35110 T**	**VKDP 33100 T**	⚠	VW
11541	**VKDA 35110 T**	**VKDP 33108 T**	⚠	VW
11541	**VKDC 35100 T**	**VKDP 33100 T**	⚠	VW
11541	**VKDC 35100 T**	**VKDP 33108 T**	⚠	VW
11541	**VKDC 35101 T**	**VKDP 33100 T**	⚠	VW
11541	**VKDC 35101 T**	**VKDP 33108 T**	⚠	VW
11542	**VKDA 35319 T**	**VKDP 33308 T**		PEUGEOT
11543	**VKDA 35319 T**	**VKDP 33308 T**		PEUGEOT
11545		**VKDP 84401 T**		MAZDA
11548	**VKDA 35304 T**	**VKDP 33300 T**	⚠	PEUGEOT
11548	**VKDA 35305 T**	**VKDP 33300 T**	⚠	PEUGEOT
11557	**VKDA 35303 T**	**VKDP 33300 T**		PEUGEOT
11558	**VKDA 35303 T**	**VKDP 33300 T**		PEUGEOT
11559	**VKDA 35306 T**	**VKDP 33300 T**	⚠	CITROËN
11559	**VKDA 35307 T**	**VKDP 33300 T**	⚠	CITROËN
11560	**VKDA 35306 T**	**VKDP 33300 T**	⚠	CITROËN
11560	**VKDA 35307 T**	**VKDP 33300 T**	⚠	CITROËN
11561	**VKDA 35306 T**	**VKDP 33300 T**	⚠	CITROËN
11561	**VKDA 35307 T**	**VKDP 33300 T**	⚠	CITROËN
11562	**VKDA 35306 T**	**VKDP 33300 T**	⚠	CITROËN
11562	**VKDA 35307 T**	**VKDP 33300 T**	⚠	CITROËN
11614	**VKDC 35634 T**	**VKDP 33500 T**		VOLVO
11615	**VKDC 35634 T**	**VKDP 33500 T**		VOLVO
11616	**VKDA 35304 T**	**VKDP 33300 T**		PEUGEOT
11617	**VKDA 35306 T**	**VKDP 33300 T**	⚠	PEUGEOT
11617	**VKDA 35307 T**	**VKDP 33300 T**	⚠	PEUGEOT
11618	**VKDA 35306 T**	**VKDP 33300 T**	⚠	PEUGEOT
11618	**VKDA 35307 T**	**VKDP 33300 T**	⚠	PEUGEOT
11619	**VKDA 35306 T**	**VKDP 33300 T**	⚠	CITROËN
11619	**VKDA 35307 T**	**VKDP 33300 T**	⚠	CITROËN
11620	**VKDA 35306 T**	**VKDP 33300 T**	⚠	CITROËN
11620	**VKDA 35307 T**	**VKDP 33300 T**	⚠	CITROËN
11642	**VKDA 35110 T**	**VKDP 33100 T**	⚠	VW
11642	**VKDA 35110 T**	**VKDP 33108 T**	⚠	VW
11642	**VKDC 35101 T**	**VKDP 33100 T**	⚠	VW
11642	**VKDC 35101 T**	**VKDP 33108 T**	⚠	VW
11647	**VKDC 35203 T**	**VKDP 31200 T**		FIAT
11648	**VKDA 35402 T**	**VKDP 33400 T**		FORD

MONROE .../...

11654	**VKDA 35623 T**	**VKDP 32601 T**		RENAULT
11655	**VKDA 35623 T**	**VKDP 32601 T**		RENAULT
11658	**VKDA 35608 T**	**VKDP 33600 T**		VOLVO
11669	**VKDC 35634 T**	**VKDP 33500 T**		VOLVO
11679	**VKDA 35317 T**	**VKDP 33301 T**		CITROËN / FIAT / LANCIA / PEUGEOT
11713	**VKDA 35312 T**	**VKDP 33308 T**	⚠	PEUGEOT
11713	**VKDA 35312 T**	**VKDP 32302 T**	⚠	PEUGEOT
11714	**VKDA 35312 T**	**VKDP 33308 T**	⚠	PEUGEOT
11714	**VKDA 35312 T**	**VKDP 32302 T**	⚠	PEUGEOT
11715	**VKDA 35319 T**	**VKDP 33308 T**		PEUGEOT
11716	**VKDA 35319 T**	**VKDP 33308 T**		PEUGEOT
11729	**VKD 35002 T**	**VKDP 33300 T**	⚠	CITROËN / PEUGEOT
11729	**VKDA 35306 T**	**VKDP 33300 T**	⚠	CITROËN / PEUGEOT
11729	**VKDA 35307 T**	**VKDP 33300 T**	⚠	CITROËN / PEUGEOT
11730	**VKD 35002 T**	**VKDP 33300 T**	⚠	CITROËN / PEUGEOT
11730	**VKDA 35306 T**	**VKDP 33300 T**	⚠	CITROËN / PEUGEOT
11730	**VKDA 35307 T**	**VKDP 33300 T**	⚠	CITROËN / PEUGEOT
11735	**VKD 35002 T**	**VKDP 33300 T**	⚠	CITROËN / PEUGEOT
11735	**VKDA 35306 T**	**VKDP 33300 T**	⚠	CITROËN / PEUGEOT
11735	**VKDA 35307 T**	**VKDP 33300 T**	⚠	CITROËN / PEUGEOT
11736	**VKD 35002 T**	**VKDP 33300 T**	⚠	CITROËN / PEUGEOT
11736	**VKDA 35306 T**	**VKDP 33300 T**	⚠	CITROËN / PEUGEOT
11736	**VKDA 35307 T**	**VKDP 33300 T**	⚠	CITROËN / PEUGEOT
11737	**VKDA 35303 T**	**VKDP 33300 T**		PEUGEOT
11741	**VKD 35001 T**			RENAULT
11743	**VKDA 35623 T**	**VKDP 32601 T**		RENAULT
11753	**VKDA 35312 T**	**VKDP 32302 T**	⚠	PEUGEOT
11753	**VKDA 35312 T**	**VKDP 33308 T**	⚠	PEUGEOT
11754	**VKDA 35312 T**	**VKDP 32302 T**	⚠	PEUGEOT
11754	**VKDA 35312 T**	**VKDP 33308 T**	⚠	PEUGEOT
11805	**VKDA 35603 T**	VKDP 32602 T	⚠	RENAULT
11805	**VKDA 35604 T**	VKDP 32602 T	⚠	RENAULT
11805	**VKDA 35605 T**	VKDP 32602 T	⚠	RENAULT
11806	**VKDA 35603 T**	VKDP 32602 T	⚠	RENAULT
11806	**VKDA 35604 T**	VKDP 32602 T	⚠	RENAULT
11806	**VKDA 35605 T**	VKDP 32602 T	⚠	RENAULT
15028	**VKDA 40101 T**	**VKDP 44100 T**		VW
15062		**VKDP 33509 T**		OPEL / SUZUKI / VAUXHALL
15063		**VKDP 33509 T**		OPEL / SUZUKI / VAUXHALL
16020	**VKDA 35403 T**	**VKDP 31400 T**	⚠	FORD
16020	**VKDA 35409 T**	**VKDP 31400 T**	⚠	FORD
16035		**VKDP 31400 T**		FORD
16080	**VKDA 35403 T**	**VKDP 31400 T**	⚠	FORD
16080	**VKDA 35409 T**	**VKDP 31400 T**	⚠	FORD
16092	**VKDA 35602 T**	VKDP 31606 T		RENAULT
16104	**VKDC 35207 T**			LANCIA
16111	**VKDA 37202 T**	**VKDP 31400 T**		FIAT
16112	**VKDA 35200 T**	**VKDP 33300 T**	⚠	FIAT
16112	**VKDA 35200 T**	**VKDP 33202 T**	⚠	FIAT
16112	**VKDC 35204 T**	**VKDP 33300 T**	⚠	FIAT
16112	**VKDC 35204 T**	**VKDP 33202 T**	⚠	FIAT
16116	**VKDA 35602 T**	VKDP 31606 T		RENAULT
16118	**VKDA 35403 T**	**VKDP 31400 T**	⚠	FORD
16118	**VKDA 35403 T**	**VKDP 33401 T**	⚠	FORD
16118	**VKDA 35406 T**	**VKDP 31400 T**	⚠	FORD
16118	**VKDA 35406 T**	**VKDP 33401 T**	⚠	FORD
16118	**VKDA 35407 T**	**VKDP 31400 T**	⚠	FORD
16118	**VKDA 35407 T**	**VKDP 33401 T**	⚠	FORD
16130	**VKDA 35112 T**	**VKDP 33203 T**		SKODA
16150	**VKDA 35403 T**	**VKDP 33409 T**		FORD
16151	**VKDA 35110 T**	**VKDP 33100 T**	⚠	SEAT / VW
16151	**VKDA 35110 T**	**VKDP 33107 T**	⚠	SEAT / VW
16151	**VKDA 35110 T**	**VKDP 33108 T**	⚠	SEAT / VW
16151	**VKDC 35101 T**	**VKDP 33100 T**	⚠	SEAT / VW
16151	**VKDC 35101 T**	**VKDP 33107 T**	⚠	SEAT / VW
16151	**VKDC 35101 T**	**VKDP 33108 T**	⚠	SEAT / VW
16151	**VKDC 35102 T**	**VKDP 33100 T**	⚠	SEAT / VW
16151	**VKDC 35102 T**	**VKDP 33107 T**	⚠	SEAT / VW
16151	**VKDC 35102 T**	**VKDP 33108 T**	⚠	SEAT / VW
16167		**VKDP 33401 T**		HYUNDAI
16169	**VKDA 37201 T**	**VKDP 33800 T**		FIAT
16173	**VKDA 35401 T**		⚠	FORD
16173	**VKDA 35405 T**		⚠	FORD
16175	**VKDC 81103 T**			TOYOTA
16176	**VKDC 81103 T**			TOYOTA
16192	**VKDA 35601 T**	**VKDP 31601 T**		RENAULT
16193	**VKDA 35601 T**	**VKDP 31601 T**		RENAULT
16194	**VKDC 35203 T**	**VKDP 31200 T**		FIAT
16197		**VKDP 93203 T**		NISSAN
16198		**VKDP 93203 T**		NISSAN
16199	**VKDA 35403 T**	**VKDP 31400 T**		FORD
16203	**VKDA 35500 T**	**VKDP 33500 T**	⚠	OPEL/VAUXHALL
16203	**VKDA 35508 T**	**VKDP 33500 T**	⚠	OPEL/VAUXHALL
16208	**VKDA 35403 T**			FORD
16209	**VKDA 35401 T**	**VKDP 31400 T**	⚠	FORD
16209	**VKDA 35401 T**	**VKDP 33401 T**	⚠	FORD
16211	**VKDA 35403 T**	**VKDP 31400 T**	⚠	FORD
16211	**VKDA 35409 T**	**VKDP 31400 T**	⚠	FORD
16212		**VKDP 31400 T**		AUTOBIANCHI / LANCIA
16213		**VKDP 31400 T**		AUTOBIANCHI / LANCIA
16220	**VKDA 35405 T**	**VKDP 33401 T**		FORD
16221	**VKDA 35405 T**	**VKDP 33401 T**		FORD
16222	**VKDA 35405 T**	**VKDP 33401 T**	⚠	FORD
16222	**VKDA 35406 T**	**VKDP 33401 T**	⚠	FORD
16226	**VKDA 35407 T**	**VKDP 33401 T**		FORD / MAZDA
16227	**VKDA 35407 T**	**VKDP 33401 T**		FORD / MAZDA
16242	**VKD 35001 T**	**VKDP 32600 T**	⚠	RENAULT
16242	**VKDA 35615 T**	**VKDP 32600 T**	⚠	RENAULT
16243	**VKDC 35203 T**			LANCIA
16255	**VKDA 88203 T**			NISSAN
16256	**VKDA 88203 T**			NISSAN
16258	**VKDA 35407 T**			FORD
16259	**VKDA 35615 T**	**VKDP 32600 T**		RENAULT
16262	**VKDA 35407 T**	**VKDP 33401 T**		FORD
16263	**VKDA 35112 T**	**VKDP 33110 T**		SKODA
16264	**VKDA 35113 T**	**VKDP 33101 T**		SEAT / SKODA / VW
16265	**VKDA 88203 T**			NISSAN
16266	**VKDA 88203 T**			NISSAN
16275	**VKDA 35417 T**	**VKDP 33402 T**	⚠	FORD
16275	**VKDA 35425 T**	**VKDP 33402 T**	⚠	FORD
16276	**VKDA 35417 T**	**VKDP 33402 T**	⚠	FORD
16276	**VKDA 35425 T**	**VKDP 33402 T**	⚠	FORD
16277	**VKD 35005 T**			MERCEDES BENZ
16282	**VKDA 35417 T**	**VKDP 33402 T**	⚠	FORD

16282	**VKDA 35425 T**	**VKDP 33402 T**	⚠	FORD	16439	**VKDA 35308 T**	**VKDP 33303 T**	⚠	PEUGEOT
16283	**VKDA 35417 T**	**VKDP 33402 T**	⚠	FORD	16439	**VKDA 35309 T**	**VKDP 33306 T**	⚠	PEUGEOT
16283	**VKDA 35425 T**	**VKDP 33402 T**	⚠	FORD	16439	**VKDA 35309 T**	**VKDP 32301 T**	⚠	PEUGEOT
16288	**VKDA 35600 T**	**VKDP 31600 T**		RENAULT	16439	**VKDA 35309 T**	**VKDP 33303 T**	⚠	PEUGEOT
16296	**VKDA 35112 T**	**VKDP 33110 T**	⚠	SKODA / VW	16440	**VKDA 35308 T**	**VKDP 33303 T**	⚠	PEUGEOT
16296	**VKDA 35112 T**	**VKDP 33100 T**	⚠	SKODA / VW	16440	**VKDA 35308 T**	**VKDP 33306 T**	⚠	PEUGEOT
16306	**VKDA 35220 T**		⚠	FIAT	16441	**VKDA 35308 T**	**VKDP 33303 T**	⚠	PEUGEOT
16306	**VKDA 35221 T**		⚠	FIAT	16441	**VKDA 35308 T**	**VKDP 33306 T**	⚠	PEUGEOT
16309	**VKDA 35115 T**	**VKDP 33800 T**		AUDI	16444		**VKDP 83201 T**		TOYOTA
16310	**VKDA 35600 T**	**VKDP 31600 T**		RENAULT	16445		**VKDP 83201 T**		TOYOTA
16326	**VKDA 35619 T**	**VKDP 31602 T**	⚠	RENAULT	16446	**VKDA 35308 T**	**VKDP 33303 T**	⚠	PEUGEOT
16326	**VKDA 35626 T**	**VKDP 31602 T**	⚠	RENAULT	16446	**VKDA 35308 T**	**VKDP 33306 T**	⚠	PEUGEOT
16327	**VKDA 35508 T**		⚠	OPEL/VAUXHALL	16446	**VKDA 35309 T**	**VKDP 33303 T**	⚠	PEUGEOT
16327	**VKDA 35509 T**		⚠	OPEL/VAUXHALL	16446	**VKDA 35309 T**	**VKDP 33306 T**	⚠	PEUGEOT
16328	**VKDA 35508 T**		⚠	OPEL/VAUXHALL	16447	**VKDA 35308 T**	**VKDP 33306 T**	⚠	PEUGEOT
16328	**VKDA 35509 T**		⚠	OPEL/VAUXHALL	16447	**VKDA 35308 T**	**VKDP 33303 T**	⚠	PEUGEOT
16329	**VKDA 35508 T**		⚠	OPEL/VAUXHALL	16447	**VKDA 35309 T**	**VKDP 33306 T**	⚠	PEUGEOT
16329	**VKDA 35509 T**		⚠	OPEL/VAUXHALL	16447	**VKDA 35309 T**	**VKDP 33303 T**	⚠	PEUGEOT
16330	**VKDA 35508 T**		⚠	OPEL/VAUXHALL	16449	**VKDA 35316 T**			CITROËN
16330	**VKDA 35509 T**		⚠	OPEL/VAUXHALL	16450	**VKDA 35316 T**			CITROËN
16356	**VKDC 35232 T**			FIAT	16451	**VKDA 35115 T**	**VKDP 33800 T**		SEAT / SKODA / VW
16373	**VKDA 35315 T**	**VKDP 33304 T**		PEUGEOT					
16374	**VKDA 35315 T**	**VKDP 33304 T**		PEUGEOT	16470	**VKDC 35232 T**			FIAT
16375	**VKDA 35315 T**	**VKDP 33304 T**		PEUGEOT	16495	**VKDA 35122 T**			AUDI
16376	**VKDA 35315 T**	**VKDP 33304 T**		PEUGEOT	16496	**VKDA 35122 T**			SKODA / VW
16381	**VKDA 35220 T**			FIAT	16497	**VKDA 35122 T**			AUDI
16382	**VKDA 35220 T**			FIAT	16498	**VKDA 35122 T**			SKODA / VW
16383	**VKDA 35407 T**	**VKDP 33401 T**	⚠	FORD / MAZDA	16507	**VKDA 35810 T**	**VKDP 33801 T**		MERCEDES BENZ
16383	**VKDA 35424 T**	**VKDP 33401 T**	⚠	FORD / MAZDA	16508		**VKDP 81505 T**		MITSUBISHI
16384	**VKDA 35407 T**	**VKDP 33401 T**	⚠	FORD / MAZDA	16511	**VKDA 35811 T**	**VKDP 33801 T**		MERCEDES BENZ
16384	**VKDA 35424 T**	**VKDP 33401 T**	⚠	FORD / MAZDA	16512	**VKDA 35400 T**	**VKDP 33405 T**	⚠	FORD
16385	**VKDA 35424 T**			FORD / MAZDA	16512	**VKDA 35416 T**	**VKDP 33405 T**	⚠	FORD
16386	**VKDA 35424 T**			FORD / MAZDA	16518	**VKDC 35213 T**		⚠	FIAT / LANCIA
16387	**VKD 35001 T**	**VKDP 31603 T**	⚠	RENAULT	16518	**VKDC 35214 T**		⚠	FIAT / LANCIA
16387	**VKD 35001 T**	**VKDP 32600 T**	⚠	RENAULT	16531	**VKDA 35200 T**	**VKDP 33202 T**		FIAT / LANCIA
16387	**VKDA 35615 T**	**VKDP 31603 T**	⚠	RENAULT	16535	**VKDA 35303 T**	**VKDP 33300 T**		PEUGEOT
16387	**VKDA 35615 T**	**VKDP 32600 T**	⚠	RENAULT	16537	**VKDA 35222 T**		⚠	ALFA ROMEO
16387	**VKDA 35625 T**	**VKDP 31603 T**	⚠	RENAULT	16537	**VKDA 35223 T**		⚠	ALFA ROMEO
16387	**VKDA 35625 T**	**VKDP 32600 T**	⚠	RENAULT	16538	**VKDA 40208 T**			ALFA ROMEO / FIAT / LANCIA
16401	**VKDC 35613 T**	**VKDP 33601 T**		VOLVO					
16402	**VKDC 35613 T**	**VKDP 33601 T**		VOLVO	16539	**VKDC 35420 T**	**VKDP 33408 T**		SAAB
16404	**VKDA 35306 T**	**VKDP 33300 T**		CITROËN	16541	**VKDA 35110 T**	**VKDP 33100 T**	⚠	VW
16405	**VKDA 35306 T**	**VKDP 33300 T**		CITROËN	16541	**VKDA 35110 T**	**VKDP 33108 T**	⚠	VW
16407	**VKDC 35814 T**	**VKDP 33800 T**		BMW	16541	**VKDC 35101 T**	**VKDP 33100 T**	⚠	VW
16408	**VKDC 35814 T**	**VKDP 33800 T**		BMW	16541	**VKDC 35101 T**	**VKDP 33108 T**	⚠	VW
16416	**VKDA 35221 T**		⚠	FIAT	16547	**VKDA 35200 T**	**VKDP 33202 T**		LANCIA
16416	**VKDA 35225 T**		⚠	FIAT	16551		**VKDP 93203 T**		NISSAN
16417	**VKDA 35220 T**		⚠	FIAT	16552		**VKDP 93203 T**		NISSAN
16417	**VKDA 35221 T**		⚠	FIAT	16553		**VKDP 93203 T**		NISSAN
16417	**VKDA 35225 T**		⚠	FIAT	16554		**VKDP 93203 T**		NISSAN
16419	**VKD 35018 T**			LANCIA	16555	**VKDC 81503 T**	**VKDP 83503 T**		HYUNDAI / MITSUBISHI
16420	**VKDA 35306 T**	**VKDP 33300 T**	⚠	CITROËN					
16420	**VKDA 35307 T**	**VKDP 33300 T**	⚠	CITROËN	16564	**VKDA 35810 T**	**VKDP 33801 T**		MERCEDES BENZ
16421	**VKDA 35306 T**	**VKDP 33300 T**	⚠	CITROËN	16565	**VKDA 35811 T**	**VKDP 33801 T**		MERCEDES BENZ
16421	**VKDA 35307 T**	**VKDP 33300 T**	⚠	CITROËN	16570	**VKDC 35802 T**	**VKDP 33800 T**		BMW
16422	**VKDA 35306 T**	**VKDP 33300 T**	⚠	CITROËN	16571	**VKDC 35802 T**	**VKDP 33800 T**		BMW
16422	**VKDA 35307 T**	**VKDP 33300 T**	⚠	CITROËN	16572	**VKDC 35802 T**	**VKDP 33800 T**		BMW
16423	**VKDA 35306 T**	**VKDP 33300 T**	⚠	CITROËN	16573	**VKDC 35802 T**	**VKDP 33800 T**		BMW
16423	**VKDA 35307 T**	**VKDP 33300 T**	⚠	CITROËN	16574	**VKDA 35222 T**		⚠	ALFA ROMEO
16430	**VKDA 35418 T**	**VKDP 33411 T**		FORD	16574	**VKDA 35223 T**		⚠	ALFA ROMEO
16438	**VKDA 35308 T**	**VKDP 33306 T**	⚠	PEUGEOT	16575	**VKDC 81505 T**			MITSUBISHI
16438	**VKDA 35308 T**	**VKDP 32301 T**	⚠	PEUGEOT	16577	**VKDA 35110 T**	**VKDP 33100 T**	⚠	SEAT / VW
16438	**VKDA 35308 T**	**VKDP 33303 T**	⚠	PEUGEOT	16577	**VKDA 35110 T**	**VKDP 33107 T**	⚠	SEAT / VW
16438	**VKDA 35309 T**	**VKDP 33306 T**	⚠	PEUGEOT	16577	**VKDA 35110 T**	**VKDP 33108 T**	⚠	SEAT / VW
16438	**VKDA 35309 T**	**VKDP 32301 T**	⚠	PEUGEOT	16577	**VKDA 35115 T**	**VKDP 33100 T**	⚠	SEAT / VW
16438	**VKDA 35309 T**	**VKDP 33303 T**	⚠	PEUGEOT	16577	**VKDA 35115 T**	**VKDP 33107 T**	⚠	SEAT / VW
16439	**VKDA 35308 T**	**VKDP 33306 T**	⚠	PEUGEOT	16577	**VKDA 35115 T**	**VKDP 33108 T**	⚠	SEAT / VW
16439	**VKDA 35308 T**	**VKDP 32301 T**	⚠	PEUGEOT	16577	**VKDC 35101 T**	**VKDP 33100 T**	⚠	SEAT / VW

MONROE .../...

16577	**VKDC 35101 T**	**VKDP 33107 T**	⚠	SEAT / VW
16577	**VKDC 35101 T**	**VKDP 33108 T**	⚠	SEAT / VW
16577	**VKDC 35102 T**	**VKDP 33100 T**	⚠	SEAT / VW
16577	**VKDC 35102 T**	**VKDP 33107 T**	⚠	SEAT / VW
16577	**VKDC 35102 T**	**VKDP 33108 T**	⚠	SEAT / VW
16581	**VKD 35013 T**	**VKDP 33405 T**	⚠	FORD
16581	**VKDA 35400 T**	**VKDP 33405 T**	⚠	FORD
16581	**VKDA 35416 T**	**VKDP 33405 T**	⚠	FORD
16582	**VKDC 35802 T**	**VKDP 33800 T**		BMW
16583	**VKDC 35802 T**	**VKDP 33800 T**		BMW
16584	**VKDC 35802 T**	**VKDP 33800 T**		BMW
16585	**VKDC 35802 T**	**VKDP 33800 T**		BMW
16586	**VKDC 81504 T**			MITSUBISHI / PROTON
16587	**VKDC 81504 T**			MITSUBISHI / PROTON
16588	**VKDC 35802 T**	**VKDP 33800 T**		BMW
16589	**VKDC 35802 T**	**VKDP 33800 T**		BMW
16590	**VKDC 35802 T**	**VKDP 33800 T**		BMW
16591	**VKDC 35802 T**	**VKDP 33800 T**		BMW
16598	**VKDA 35200 T**	**VKDP 83201 T**		ALFA ROMEO
16599	**VKDA 35200 T**	**VKDP 33300 T**	⚠	ALFA ROMEO / FIAT
16599	**VKDA 35200 T**	**VKDP 83201 T**	⚠	ALFA ROMEO / FIAT
16599	**VKDC 35204 T**	**VKDP 33300 T**	⚠	ALFA ROMEO / FIAT
16599	**VKDC 35204 T**	**VKDP 83201 T**	⚠	ALFA ROMEO / FIAT
16605	**VKDA 35303 T**	**VKDP 33300 T**		PEUGEOT
16606	**VKDA 35303 T**	**VKDP 33300 T**		PEUGEOT
16607	**VKDA 35110 T**	**VKDP 33100 T**	⚠	VW
16607	**VKDA 35110 T**	**VKDP 33108 T**	⚠	VW
16607	**VKDC 35100 T**	**VKDP 33100 T**	⚠	VW
16607	**VKDC 35100 T**	**VKDP 33108 T**	⚠	VW
16607	**VKDC 35101 T**	**VKDP 33100 T**	⚠	VW
16607	**VKDC 35101 T**	**VKDP 33108 T**	⚠	VW
16641	**VKDA 35403 T**			FORD
16642	**VKDA 35110 T**	**VKDP 33100 T**	⚠	VW
16642	**VKDA 35110 T**	**VKDP 33108 T**	⚠	VW
16642	**VKDC 35101 T**	**VKDP 33100 T**	⚠	VW
16642	**VKDC 35101 T**	**VKDP 33108 T**	⚠	VW
16643	**VKD 35002 T**	**VKDP 33300 T**	⚠	CITROËN / PEUGEOT
16643	**VKDA 35306 T**	**VKDP 33300 T**	⚠	CITROËN / PEUGEOT
16643	**VKDA 35307 T**	**VKDP 33300 T**	⚠	CITROËN / PEUGEOT
16644	**VKD 35002 T**	**VKDP 33300 T**	⚠	CITROËN / PEUGEOT
16644	**VKDA 35306 T**	**VKDP 33300 T**	⚠	CITROËN / PEUGEOT
16644	**VKDA 35307 T**	**VKDP 33300 T**	⚠	CITROËN / PEUGEOT
16647	**VKDC 35203 T**	**VKDP 31200 T**		FIAT
16649	**VKDA 35402 T**	**VKDP 33400 T**		FORD
16656	**VKDA 35510 T**	**VKDP 33504 T**	⚠	OPEL/VAUXHALL
16656	**VKDA 35511 T**	**VKDP 33504 T**	⚠	OPEL/VAUXHALL
16657	**VKDA 35510 T**	**VKDP 33504 T**	⚠	OPEL/VAUXHALL
16657	**VKDA 35511 T**	**VKDP 33504 T**	⚠	OPEL/VAUXHALL
16664	**VKDA 35200 T**			FIAT
16665	**VKDA 35200 T**			FIAT
16666	**VKDA 35200 T**			LANCIA
16668	**VKDA 35200 T**	**VKDP 33202 T**		LANCIA
16670	**VKDA 35200 T**	**VKDP 83201 T**		ALFA ROMEO
16671	**VKDA 40400 T**	**VKDP 43403 T**		FORD
16672	**VKDA 40400 T**	**VKDP 43403 T**		FORD
16683	**VKDA 35200 T**	**VKDP 83201 T**		ALFA ROMEO
16684	**VKDA 35200 T**	**VKDP 83201 T**		ALFA ROMEO
16688	**VKDC 35613 T**	**VKDP 33601 T**		MITSUBISHI / VOLVO
16689	**VKDC 35613 T**	**VKDP 33601 T**		MITSUBISHI / VOLVO
16690	**VKDC 35613 T**	**VKDP 33601 T**		VOLVO
16691	**VKDC 35613 T**	**VKDP 33601 T**		VOLVO
16694	**VKDA 35110 T**	**VKDP 33405 T**		FORD / SEAT / VW
16706	**VKDC 35204 T**	**VKDP 33300 T**		FIAT
16707	**VKDC 35204 T**	**VKDP 33300 T**		FIAT
16708	**VKDA 35200 T**	**VKDP 33300 T**	⚠	FIAT
16708	**VKDC 35204 T**	**VKDP 33300 T**	⚠	FIAT
16721	**VKDA 35402 T**	**VKDP 33400 T**		FORD
16722	**VKDA 35402 T**	**VKDP 33400 T**		FORD
16725	**VKDA 35200 T**	**VKDP 33202 T**	⚠	FIAT / LANCIA
16725	**VKDC 35204 T**	**VKDP 33202 T**	⚠	FIAT / LANCIA
16726	**VKDC 35204 T**			FIAT
16727	**VKDA 35813 T**			MERCEDES BENZ
16728	**VKDA 35620 T**	**VKDP 32601 T**		RENAULT
16731	**VKDA 35113 T**	**VKDP 33101 T**		AUDI / SKODA / VW
16746	**VKDC 81112 T**	**VKDP 83106 T**		TOYOTA
16747	**VKDC 81112 T**	**VKDP 83106 T**		TOYOTA
16748	**VKDA 40204 T**			ALFA ROMEO
16749	**VKDA 35308 T**	**VKDP 32301 T**	⚠	PEUGEOT
16749	**VKDA 35308 T**	**VKDP 33303 T**	⚠	PEUGEOT
16749	**VKDA 35308 T**	**VKDP 33306 T**	⚠	PEUGEOT
16749	**VKDA 35309 T**	**VKDP 32301 T**	⚠	PEUGEOT
16749	**VKDA 35309 T**	**VKDP 33303 T**	⚠	PEUGEOT
16749	**VKDA 35309 T**	**VKDP 33306 T**	⚠	PEUGEOT
16750	**VKDA 35308 T**	**VKDP 32301 T**	⚠	PEUGEOT
16750	**VKDA 35308 T**	**VKDP 33303 T**	⚠	PEUGEOT
16750	**VKDA 35308 T**	**VKDP 33306 T**	⚠	PEUGEOT
16750	**VKDA 35309 T**	**VKDP 32301 T**	⚠	PEUGEOT
16750	**VKDA 35309 T**	**VKDP 33303 T**	⚠	PEUGEOT
16750	**VKDA 35309 T**	**VKDP 33306 T**	⚠	PEUGEOT
16751	**VKDA 35303 T**	**VKDP 33300 T**		PEUGEOT
16752	**VKDA 35303 T**	**VKDP 33300 T**		PEUGEOT
16757	**VKDA 35508 T**	**VKDP 34500 T**	⚠	OPEL/VAUXHALL
16757	**VKDA 35509 T**	**VKDP 34500 T**	⚠	OPEL/VAUXHALL
16758	**VKDA 35508 T**	**VKDP 34500 T**	⚠	OPEL/VAUXHALL
16758	**VKDA 35509 T**	**VKDP 34500 T**	⚠	OPEL/VAUXHALL
16764	**VKDA 35508 T**	**VKDP 34500 T**	⚠	OPEL/VAUXHALL
16764	**VKDA 35509 T**	**VKDP 34500 T**	⚠	OPEL/VAUXHALL
16765	**VKDA 35508 T**	**VKDP 34500 T**	⚠	OPEL/VAUXHALL
16765	**VKDA 35509 T**	**VKDP 34500 T**	⚠	OPEL/VAUXHALL
16766	**VKDA 35508 T**	**VKDP 34500 T**		OPEL/VAUXHALL
16767	**VKDA 35508 T**	**VKDP 34500 T**		OPEL/VAUXHALL
16770	**VKDA 35508 T**	**VKDP 34500 T**		OPEL/VAUXHALL
16771	**VKDA 35508 T**	**VKDP 34500 T**		OPEL/VAUXHALL
16772	**VKDC 35814 T**	**VKDP 33800 T**		BMW
16773	**VKDC 35814 T**	**VKDP 33800 T**		BMW
16774	**VKDC 35814 T**	**VKDP 33800 T**		BMW
16775	**VKDC 35814 T**	**VKDP 33800 T**		BMW
16776	**VKDC 35232 T**			FIAT
16783	**VKDC 35613 T**	**VKDP 33601 T**		VOLVO
16784	**VKDC 35613 T**	**VKDP 33601 T**		VOLVO
16785	**VKDC 35613 T**	**VKDP 33601 T**		VOLVO
16786	**VKDC 35613 T**	**VKDP 33601 T**		VOLVO
16790	**VKDA 35508 T**	**VKDP 34500 T**		OPEL
16791	**VKDA 35508 T**	**VKDP 34500 T**		OPEL
16792	**VKDA 35236 T**			FIAT
16795	**VKD 35001 T**	**VKDP 32600 T**	⚠	RENAULT
16795	**VKDA 35615 T**	**VKDP 32600 T**	⚠	RENAULT
16796	**VKDC 35613 T**	**VKDP 33601 T**		VOLVO

16797	**VKDC 35613 T**	**VKDP 33601 T**		VOLVO	23936	**VKDA 40401 T**			FORD
16798	**VKDC 35613 T**	**VKDP 33601 T**		VOLVO	23937	**VKDA 40404 T**	**VKDP 44400 T**		FORD
16799	**VKDC 35613 T**	**VKDP 33601 T**		VOLVO	23950	**VKDA 40101 T**		⚠	SEAT / SKODA / VW
16815	**VKD 35013 T**			FORD					
16816	**VKD 35013 T**			FORD	23950	**VKDA 40104 T**		⚠	SEAT / SKODA / VW
16817	**VKD 35020 T**			LANCIA					
16826	**VKDC 35627 T**	**VKDP 33500 T**	⚠	VOLVO	23951	**VKDA 35230 T**			ALFA ROMEO
16826	**VKDC 35634 T**	**VKDP 33500 T**	⚠	VOLVO	23959		**VKDP 43105 T**		MAZDA
21632	**VKDA 40610 T**			VOLVO	23976	**VKDA 40101 T**	**VKDP 43100 T**	⚠	SEAT / VW
21637	**VKDA 40218 T**		⚠	FIAT	23976	**VKDA 40101 T**	**VKDP 43102 T**	⚠	SEAT / VW
21637	**VKDA 40219 T**		⚠	FIAT	25504	**VKDA 40304 T**			PEUGEOT
23248	**VKDA 35602 T**	VKDP 31606 T		RENAULT	25505	**VKDA 40304 T**			PEUGEOT
23436	**VKDA 40805 T**			BMW	26337	**VKDA 40110 T**			AUDI
23454	**VKDA 40805 T**			BMW	26635	**VKDA 40809 T**			BMW
23468	**VKDA 40805 T**			BMW	26638	**VKDA 40809 T**			BMW
23719		**VKDP 43101 T**		BMW	26650	**VKDA 35116 T**	**VKDP 33111 T**	⚠	AUDI
23738		**VKDP 43101 T**		AUDI	26650	**VKDA 35118 T**	**VKDP 33111 T**	⚠	AUDI
23744	**VKDA 40101 T**			VW	26654	**VKD 35021 T**	**VKDP 33104 T**	⚠	AUDI / VW
23745		**VKDP 43102 T**		VW	26654	**VKD 35021 T**	**VKDP 33111 T**	⚠	AUDI / VW
23753		**VKDP 43400 T**		MAZDA	26654	**VKDA 35110 T**	**VKDP 33104 T**	⚠	AUDI / VW
23754		**VKDP 43101 T**		AUDI	26654	**VKDA 35110 T**	**VKDP 33111 T**	⚠	AUDI / VW
23761		**VKDP 43100 T**		SKODA	26654	**VKDA 35116 T**	**VKDP 33104 T**	⚠	AUDI / VW
23773	**VKDA 40407 T**			FORD	26654	**VKDA 35116 T**	**VKDP 33111 T**	⚠	AUDI / VW
23778	**VKDA 40113 T**			AUDI	26654	**VKDA 35118 T**	**VKDP 33104 T**	⚠	AUDI / VW
23785	**VKDA 40113 T**			AUDI	26654	**VKDA 35118 T**	**VKDP 33111 T**	⚠	AUDI / VW
23791	**VKDA 40407 T**			FORD	26655	**VKD 35021 T**	**VKDP 33104 T**	⚠	AUDI / VW
23797	**VKDA 40101 T**			SEAT	26655	**VKD 35021 T**	**VKDP 33111 T**	⚠	AUDI / VW
23809	**VKDA 40407 T**			FORD	26655	**VKDA 35110 T**	**VKDP 33104 T**	⚠	AUDI / VW
23817	**VKDA 40121 T**	**VKDP 43102 T**	⚠	AUDI	26655	**VKDA 35110 T**	**VKDP 33111 T**	⚠	AUDI / VW
23817	**VKDA 40121 T**	**VKDP 43104 T**	⚠	AUDI	26655	**VKDA 35116 T**	**VKDP 33104 T**	⚠	AUDI / VW
23817	**VKDA 40122 T**	**VKDP 43102 T**	⚠	AUDI	26655	**VKDA 35116 T**	**VKDP 33111 T**	⚠	AUDI / VW
23817	**VKDA 40122 T**	**VKDP 43104 T**	⚠	AUDI	26655	**VKDA 35118 T**	**VKDP 33104 T**	⚠	AUDI / VW
23825	**VKDA 40407 T**			FORD	26655	**VKDA 35118 T**	**VKDP 33111 T**	⚠	AUDI / VW
23830	**VKDA 40407 T**	**VKDP 43400 T**		FORD	26658	**VKDA 35116 T**	**VKDP 33111 T**	⚠	AUDI / VW
23831		**VKDP 43400 T**		FORD	26658	**VKDA 35118 T**	**VKDP 33111 T**	⚠	AUDI / VW
23832		**VKDP 43400 T**		FORD	26659	**VKDA 35118 T**	**VKDP 33111 T**		AUDI
23833	**VKDA 40407 T**	**VKDP 43400 T**		FORD	26663	**VKDA 35110 T**	**VKDP 33111 T**	⚠	AUDI / SKODA / VW
23834	**VKDA 40407 T**			FORD					
23835	**VKDA 40407 T**	**VKDP 43400 T**		FORD	26663	**VKDA 35116 T**	**VKDP 33111 T**	⚠	AUDI / SKODA / VW
23836		**VKDP 43400 T**		FORD					
23837	**VKDA 40407 T**			FORD	26663	**VKDA 35118 T**	**VKDP 33111 T**	⚠	AUDI / SKODA / VW
23839	**VKDA 40401 T**	**VKDP 43400 T**		FORD / MAZDA					
23842	**VKDA 40121 T**		⚠	AUDI	26664	**VKDA 35118 T**	**VKDP 33111 T**		AUDI
23842	**VKDA 40122 T**		⚠	AUDI	26665		**VKDP 33111 T**		AUDI
23879	**VKDA 40401 T**			FORD	34803	**VKDA 35110 T**	**VKDP 33108 T**	⚠	JEEP / VW
23886	**VKDA 40101 T**	**VKDP 43105 T**	⚠	SEAT / VW	34803	**VKDA 35110 T**	**VKDP 33100 T**	⚠	JEEP / VW
23886	**VKDA 40104 T**	**VKDP 43105 T**	⚠	SEAT / VW	34803	**VKDA 35110 T**	**VKDP 33107 T**	⚠	JEEP / VW
23889	**VKDA 40401 T**	**VKDP 43400 T**		FORD	34803	**VKDA 35111 T**	**VKDP 33108 T**	⚠	JEEP / VW
23890	**VKDA 40104 T**	**VKDP 43106 T**		AUDI / SEAT / SKODA / VW	34803	**VKDA 35111 T**	**VKDP 33100 T**	⚠	JEEP / VW
					34803	**VKDA 35111 T**	**VKDP 33107 T**	⚠	JEEP / VW
23894	**VKDA 40121 T**	**VKDP 43102 T**	⚠	AUDI	43078	**VKDA 40407 T**			FORD
23894	**VKDA 40121 T**	**VKDP 43104 T**	⚠	AUDI	43125	**VKDA 40401 T**	**VKDP 43400 T**		FORD / MAZDA
23894	**VKDA 40122 T**	**VKDP 43102 T**	⚠	AUDI	45007	**VKDA 40110 T**			AUDI / SKODA / VW
23894	**VKDA 40122 T**	**VKDP 43104 T**	⚠	AUDI					
23901	**VKDA 40401 T**	**VKDP 43400 T**		FORD / MAZDA	45008	**VKDA 40110 T**			VW
23902	**VKDA 40401 T**			FORD	45009	**VKDA 35230 T**	**VKDP 33207 T**		ALFA ROMEO
23903	**VKDA 40401 T**	**VKDP 43400 T**		FORD	53014	**VKDA 40805 T**			BMW
23904	**VKDA 40404 T**	**VKDP 44400 T**		FORD	55023	**VKDA 40610 T**		⚠	VOLVO
23905	**VKDA 40121 T**	**VKDP 43102 T**	⚠	AUDI	55023	**VKDA 40616 T**		⚠	VOLVO
23905	**VKDA 40121 T**	**VKDP 43104 T**	⚠	AUDI	71857	**VKDC 81104 T**			TOYOTA
23905	**VKDA 40122 T**	**VKDP 43102 T**	⚠	AUDI	71858	**VKDC 81104 T**			TOYOTA
23905	**VKDA 40122 T**	**VKDP 43104 T**	⚠	AUDI	C1502	**VKDA 40616 T**			VOLVO
23906	**VKDA 40121 T**		⚠	AUDI	C2501	**VKDC 35627 T**		⚠	VOLVO
23906	**VKDA 40122 T**		⚠	AUDI	C2501	**VKDC 35634 T**		⚠	VOLVO
23918	**VKDA 40805 T**			BMW	C2502	**VKDC 35627 T**	**VKDP 33500 T**	⚠	VOLVO
23919	**VKDA 40805 T**			BMW	C2502	**VKDC 35634 T**	**VKDP 33500 T**	⚠	VOLVO
23925	**VKDA 40104 T**	**VKDP 43106 T**		SKODA / VW	E1002	**VKDA 40218 T**		⚠	FIAT
23935	**VKDA 40401 T**			FORD	E1002	**VKDA 40219 T**		⚠	FIAT

MONROE .../...

E1007	**VKDA 40101 T**	**VKDP 43100 T**	⚠	VW
E1007	**VKDA 40101 T**	**VKDP 43101 T**	⚠	VW
E1008	**VKDA 40101 T**	**VKDP 43100 T**		SEAT / VW / ZASTAVA
E1009		**VKDP 43101 T**		AUDI
E1010	**VKDA 40407 T**			FORD
E1011	**VKDA 40407 T**			FORD
E1013	**VKDA 40102 T**	**VKDP 43102 T**		AUDI / VW
E1016		**VKDP 43102 T**		VW
E1020	**VKDA 40805 T**			BMW
E1021	**VKDA 40407 T**			FORD
E1041	**VKDA 40113 T**			AUDI
E1042	**VKDA 40610 T**			VOLVO
E1071	**VKDA 40101 T**	**VKDP 43105 T**		SEAT / VW
E1082	**VKDA 40401 T**	**VKDP 43400 T**	⚠	FORD
E1082	**VKDA 40407 T**	**VKDP 43400 T**	⚠	FORD
E1084	**VKDA 40101 T**	**VKDP 43103 T**	⚠	VW
E1084	**VKDA 40104 T**	**VKDP 43103 T**	⚠	VW
E1086		**VKDP 43100 T**		SKODA
E1088	**VKDA 40121 T**	**VKDP 43102 T**	⚠	AUDI
E1088	**VKDA 40121 T**	**VKDP 43104 T**	⚠	AUDI
E1088	**VKDA 40122 T**	**VKDP 43102 T**	⚠	AUDI
E1088	**VKDA 40122 T**	**VKDP 43104 T**	⚠	AUDI
E1089	**VKDA 40121 T**	**VKDP 43102 T**	⚠	AUDI
E1089	**VKDA 40121 T**	**VKDP 43104 T**	⚠	AUDI
E1089	**VKDA 40122 T**	**VKDP 43102 T**	⚠	AUDI
E1089	**VKDA 40122 T**	**VKDP 43104 T**	⚠	AUDI
E1093		**VKDP 93201 T**		NISSAN
E1098	**VKDA 40101 T**	**VKDP 43100 T**		VW
E1113	**VKDA 40805 T**			BMW
E1114	**VKDA 40805 T**			BMW
E1115	**VKDA 40805 T**			BMW
E1127	**VKDA 40805 T**			BMW
E1128	**VKDA 40805 T**			BMW
E1137	**VKDA 40600 T**	**VKDP 41600 T**		RENAULT
E1153	**VKDA 40407 T**	**VKDP 43400 T**		FORD
E1155	**VKDA 40407 T**	**VKDP 43400 T**		FORD
E1156		**VKDP 43400 T**		FORD
E1162	**VKDA 40401 T**	**VKDP 43400 T**		FORD / MAZDA
E1166	**VKDA 40121 T**		⚠	AUDI
E1166	**VKDA 40122 T**		⚠	AUDI
E1202	**VKDA 40401 T**			FORD
E1203	**VKDA 40805 T**			BMW
E1205	**VKDA 40104 T**	**VKDP 43106 T**		AUDI / SEAT
E1212	**VKDA 40104 T**	**VKDP 43106 T**		AUDI / SEAT / SKODA / VW
E1214	**VKDA 40101 T**	**VKDP 43105 T**	⚠	SEAT / VW
E1214	**VKDA 40104 T**	**VKDP 43105 T**	⚠	SEAT / VW
E1220	**VKDA 40401 T**	**VKDP 43400 T**		FORD
E1221	**VKDA 40104 T**	**VKDP 43106 T**		AUDI / SEAT / SKODA / VW
E1222	**VKDA 40104 T**	**VKDP 43106 T**		SEAT / VW
E1225	**VKDA 40805 T**			BMW
E1226	**VKDA 40805 T**			BMW
E1234	**VKDA 40109 T**		⚠	AUDI / SKODA / VW
E1234	**VKDA 40110 T**		⚠	AUDI / SKODA / VW
E1239	**VKDA 40401 T**	**VKDP 43400 T**		FORD / MAZDA
E1240	**VKDA 40401 T**			FORD
E1241	**VKDA 40401 T**	**VKDP 43400 T**		FORD
E1242	**VKDA 40404 T**	**VKDP 44400 T**		FORD
E1243	**VKDA 40121 T**	**VKDP 43102 T**	⚠	AUDI
E1243	**VKDA 40121 T**	**VKDP 43104 T**	⚠	AUDI
E1243	**VKDA 40122 T**	**VKDP 43102 T**	⚠	AUDI
E1243	**VKDA 40122 T**	**VKDP 43104 T**	⚠	AUDI
E1244	**VKDA 40121 T**		⚠	AUDI
E1244	**VKDA 40122 T**		⚠	AUDI
E1245	**VKDA 40121 T**	**VKDP 43104 T**	⚠	AUDI
E1245	**VKDA 40121 T**	**VKDP 43102 T**	⚠	AUDI
E1245	**VKDA 40122 T**	**VKDP 43104 T**	⚠	AUDI
E1245	**VKDA 40122 T**	**VKDP 43102 T**	⚠	AUDI
E1259	**VKDA 40104 T**	**VKDP 43106 T**		AUDI / VW
E1262	**VKDA 40104 T**	**VKDP 43106 T**		AUDI / SKODA / VW
E1264	**VKDA 40104 T**			AUDI
E1267	**VKDA 40104 T**			AUDI
E1274	**VKDA 40101 T**		⚠	SEAT / SKODA / VW
E1274	**VKDA 40104 T**		⚠	SEAT / SKODA / VW
E1276	**VKDA 35230 T**			ALFA ROMEO
E1280	**VKDA 40600 T**	**VKDP 41600 T**		RENAULT
E1282	**VKDA 40101 T**	**VKDP 43105 T**	⚠	SEAT
E1282	**VKDA 40104 T**	**VKDP 43105 T**	⚠	SEAT
E1289	**VKDA 40401 T**			FORD
E1295	**VKDA 40104 T**	**VKDP 43106 T**		SKODA / VW
E1303	**VKDA 40101 T**	**VKDP 43103 T**		VW
E1306	**VKDA 40101 T**		⚠	SEAT
E1306	**VKDA 40104 T**		⚠	SEAT
E1308	**VKDA 40104 T**			AUDI / SKODA / VW
E1309	**VKDA 40104 T**			AUDI / SKODA / VW
E1328	**VKDA 40101 T**	**VKDP 43100 T**	⚠	SEAT / VW
E1328	**VKDA 40101 T**	**VKDP 43102 T**	⚠	SEAT / VW
E2001	**VKDA 40809 T**			BMW
E2003	**VKDA 40110 T**			AUDI
E2020	**VKDA 40121 T**	**VKDP 43102 T**	⚠	AUDI
E2020	**VKDA 40121 T**	**VKDP 43104 T**	⚠	AUDI
E2020	**VKDA 40122 T**	**VKDP 43102 T**	⚠	AUDI
E2020	**VKDA 40122 T**	**VKDP 43104 T**	⚠	AUDI
E2022	**VKDA 35116 T**	**VKDP 33111 T**	⚠	AUDI
E2022	**VKDA 35118 T**	**VKDP 33111 T**	⚠	AUDI
E2024	**VKD 35021 T**	**VKDP 33104 T**	⚠	AUDI
E2024	**VKD 35021 T**	**VKDP 33111 T**	⚠	AUDI
E2024	**VKDA 35116 T**	**VKDP 33104 T**	⚠	AUDI
E2024	**VKDA 35116 T**	**VKDP 33111 T**	⚠	AUDI
E2024	**VKDA 35118 T**	**VKDP 33104 T**	⚠	AUDI
E2024	**VKDA 35118 T**	**VKDP 33111 T**	⚠	AUDI
E2025	**VKDA 40813 T**			BMW
E2029	**VKDA 40300 T**			PEUGEOT
E2030	**VKDA 40813 T**			BMW
E2033	**VKDA 40300 T**			PEUGEOT
E2034	**VKD 35021 T**	**VKDP 33104 T**	⚠	AUDI / VW
E2034	**VKD 35021 T**	**VKDP 33111 T**	⚠	AUDI / VW
E2034	**VKDA 35110 T**	**VKDP 33104 T**	⚠	AUDI / VW
E2034	**VKDA 35110 T**	**VKDP 33111 T**	⚠	AUDI / VW
E2034	**VKDA 35116 T**	**VKDP 33104 T**	⚠	AUDI / VW
E2034	**VKDA 35116 T**	**VKDP 33111 T**	⚠	AUDI / VW
E2034	**VKDA 35118 T**	**VKDP 33104 T**	⚠	AUDI / VW
E2034	**VKDA 35118 T**	**VKDP 33111 T**	⚠	AUDI / VW
E2036	**VKDA 40121 T**		⚠	AUDI
E2036	**VKDA 40122 T**		⚠	AUDI
E2037	**VKDA 40121 T**	**VKDP 43102 T**	⚠	AUDI
E2037	**VKDA 40121 T**	**VKDP 43104 T**	⚠	AUDI
E2037	**VKDA 40122 T**	**VKDP 43102 T**	⚠	AUDI
E2037	**VKDA 40122 T**	**VKDP 43104 T**	⚠	AUDI
E2038	**VKDA 40302 T**			PEUGEOT
E2042	**VKDA 35116 T**	**VKDP 33111 T**	⚠	AUDI / VW
E2042	**VKDA 35118 T**	**VKDP 33111 T**	⚠	AUDI / VW
E2043	**VKDA 35116 T**	**VKDP 33111 T**	⚠	AUDI
E2043	**VKDA 35118 T**	**VKDP 33111 T**	⚠	AUDI

E2044	**VKDA 35118 T**	**VKDP 33111 T**		AUDI	E3801	**VKD 35021 T**	**VKDP 33104 T**	⚠	AUDI
E2047	**VKDA 35110 T**	**VKDP 33111 T**	⚠	AUDI / SKODA / VW	E3801	**VKD 35023 T**	**VKDP 33111 T**	⚠	AUDI
					E3801	**VKD 35023 T**	**VKDP 33104 T**	⚠	AUDI
E2047	**VKDA 35116 T**	**VKDP 33111 T**	⚠	AUDI / SKODA / VW	E3801	**VKDA 35118 T**	**VKDP 33111 T**	⚠	AUDI
					E3801	**VKDA 35118 T**	**VKDP 33104 T**	⚠	AUDI
E2047	**VKDA 35118 T**	**VKDP 33111 T**	⚠	AUDI / SKODA / VW	E3802	**VKDC 35801 T**	**VKDP 33800 T**		BMW
					E3803	**VKDC 35801 T**	**VKDP 33800 T**		BMW
E2048	**VKDA 35110 T**	**VKDP 33111 T**	⚠	AUDI / VW	E3805	**VKDC 35801 T**	**VKDP 33800 T**		BMW
E2048	**VKDA 35116 T**	**VKDP 33111 T**	⚠	AUDI / VW	E3806	**VKD 35023 T**	**VKDP 33104 T**		AUDI
E2048	**VKDA 35118 T**	**VKDP 33111 T**	⚠	AUDI / VW	E4006	**VKDA 40101 T**	**VKDP 44100 T**		VW
E2049	**VKDA 35110 T**	**VKDP 33111 T**	⚠	AUDI / SKODA / VW	E4008	**VKDC 35202 T**	**VKDP 33203 T**		FIAT
					E4030	**VKDC 35202 T**	**VKDP 33203 T**		FIAT
E2049	**VKDA 35116 T**	**VKDP 33111 T**	⚠	AUDI / SKODA / VW	E4031	**VKDC 35202 T**	**VKDP 33203 T**		FIAT
					E4201	**VKDA 35110 T**	**VKDP 33100 T**	⚠	SEAT / VW
E2049	**VKDA 35118 T**	**VKDP 33111 T**	⚠	AUDI / SKODA / VW	E4201	**VKDC 35101 T**	**VKDP 33100 T**	⚠	SEAT / VW
					E4201	**VKDC 35102 T**	**VKDP 33100 T**	⚠	SEAT / VW
E2050	**VKDA 35118 T**	**VKDP 33111 T**		AUDI	E4202	**VKDA 35110 T**	**VKDP 33107 T**	⚠	SEAT / VW
E2051	**VKDA 40109 T**		⚠	AUDI / VW	E4202	**VKDA 35110 T**	**VKDP 33108 T**	⚠	SEAT / VW
E2051	**VKDA 40110 T**		⚠	AUDI / VW	E4202	**VKDA 35110 T**	**VKDP 33100 T**	⚠	SEAT / VW
E2052	**VKDA 40109 T**		⚠	AUDI / VW	E4202	**VKDC 35101 T**	**VKDP 33107 T**	⚠	SEAT / VW
E2052	**VKDA 40110 T**		⚠	AUDI / VW	E4202	**VKDC 35101 T**	**VKDP 33108 T**	⚠	SEAT / VW
E2053		**VKDP 33111 T**		AUDI	E4202	**VKDC 35101 T**	**VKDP 33100 T**	⚠	SEAT / VW
E2054		**VKDP 33111 T**		AUDI	E4202	**VKDC 35102 T**	**VKDP 33107 T**	⚠	SEAT / VW
E2055		**VKDP 33111 T**		AUDI	E4202	**VKDC 35102 T**	**VKDP 33108 T**	⚠	SEAT / VW
E2056	**VKDA 40304 T**			PEUGEOT	E4202	**VKDC 35102 T**	**VKDP 33100 T**	⚠	SEAT / VW
E2057	**VKDA 40304 T**			PEUGEOT	E4203	**VKDA 35403 T**	**VKDP 31400 T**	⚠	FORD
E2058	**VKDA 40304 T**			PEUGEOT	E4203	**VKDA 35409 T**	**VKDP 31400 T**	⚠	FORD
E3001	**VKDC 35101 T**	**VKDP 33100 T**	⚠	MITSUBISHI / VW	E4204	**VKDA 35403 T**	**VKDP 31400 T**	⚠	FORD
E3001	**VKDC 35102 T**	**VKDP 33100 T**	⚠	MITSUBISHI / VW	E4204	**VKDA 35409 T**	**VKDP 31400 T**	⚠	FORD
E3002	**VKDA 35110 T**	**VKDP 33100 T**	⚠	VW	E4205		**VKDP 33500 T**		OPEL / VAUXHALL
E3002	**VKDC 35105 T**	**VKDP 33100 T**	⚠	VW	E4207	**VKDA 35602 T**	VKDP 31606 T		RENAULT
E3003	**VKDC 35103 T**	**VKDP 32103 T**	⚠	AUDI / VW	E4208	**VKDA 37202 T**	**VKDP 31400 T**		FIAT
E3003	**VKDC 35103 T**	**VKDP 33102 T**	⚠	AUDI / VW	E4209	**VKDA 35200 T**	**VKDP 33202 T**	⚠	FIAT
E3004	**VKDC 35801 T**	**VKDP 33800 T**		BMW	E4209	**VKDA 35200 T**	**VKDP 33300 T**	⚠	FIAT
E3005	**VKDC 81105 T**			TOYOTA	E4209	**VKDC 35204 T**	**VKDP 33202 T**	⚠	FIAT
E3006	**VKDC 81104 T**			TOYOTA	E4209	**VKDC 35204 T**	**VKDP 33300 T**	⚠	FIAT
E3401	**VKDA 35300 T**	**VKDP 34303 T**	⚠	CITROËN	E4210	**VKDA 35615 T**	**VKDP 32600 T**	⚠	RENAULT
E3401	**VKDA 35302 T**	**VKDP 34303 T**	⚠	CITROËN	E4210	**VKDA 35616 T**	**VKDP 32600 T**	⚠	RENAULT
E3402	**VKDA 35501 T**	**VKDP 33500 T**		OPEL / VAUXHALL	E4211	**VKDA 37202 T**	**VKDP 31400 T**		FIAT
E3403	**VKDC 35100 T**	**VKDP 32103 T**	⚠	AUDI / VW	E4212	**VKDA 35602 T**	VKDP 31606 T		RENAULT
E3403	**VKDC 35100 T**	**VKDP 33100 T**	⚠	AUDI / VW	E4217	**VKDA 35403 T**	**VKDP 33409 T**		FORD
E3404	**VKDA 35503 T**	**VKDP 33500 T**	⚠	OPEL / VAUXHALL	E4220	**VKDA 35600 T**	**VKDP 31601 T**	⚠	RENAULT
E3404	**VKDA 35503 T**	**VKDP 33501 T**	⚠	OPEL / VAUXHALL	E4220	**VKDA 35601 T**	**VKDP 31601 T**	⚠	RENAULT
E3404	**VKDA 35515 T**	**VKDP 33500 T**	⚠	OPEL / VAUXHALL	E4221	**VKDA 35600 T**	**VKDP 31601 T**	⚠	RENAULT
E3404	**VKDA 35515 T**	**VKDP 33501 T**	⚠	OPEL / VAUXHALL	E4221	**VKDA 35601 T**	**VKDP 31601 T**	⚠	RENAULT
E3405	**VKDC 35504 T**	**VKDP 33500 T**	⚠	DAEWOO / OPEL / VAUXHALL	E4224	**VKDA 35403 T**	**VKDP 31400 T**	⚠	FORD
					E4224	**VKDA 35403 T**	**VKDP 33401 T**	⚠	FORD
E3405	**VKDC 35505 T**	**VKDP 33500 T**	⚠	DAEWOO / OPEL / VAUXHALL	E4224	**VKDA 35406 T**	**VKDP 31400 T**	⚠	FORD
					E4224	**VKDA 35406 T**	**VKDP 33401 T**	⚠	FORD
E3406	**VKDA 35608 T**	**VKDP 33600 T**		VOLVO	E4224	**VKDA 35407 T**	**VKDP 31400 T**	⚠	FORD
E3410	**VKDA 35501 T**	**VKDP 33500 T**		OPEL / VAUXHALL	E4224	**VKDA 35407 T**	**VKDP 33401 T**	⚠	FORD
E3411	**VKDC 35801 T**	**VKDP 33800 T**		BMW	E4225	**VKDA 35401 T**	**VKDP 33401 T**	⚠	FORD
E3416	**VKDC 81102 T**		⚠	TOYOTA	E4225	**VKDA 35405 T**	**VKDP 33401 T**	⚠	FORD
E3416	**VKDC 81104 T**		⚠	TOYOTA	E4226	**VKDA 35401 T**	**VKDP 31400 T**	⚠	FORD
E3418	**VKDC 35505 T**	**VKDP 33500 T**		DAEWOO / OPEL / VAUXHALL	E4226	**VKDA 35401 T**	**VKDP 33401 T**	⚠	FORD
					E4228		**VKDP 93203 T**		NISSAN
E3419	**VKDA 35300 T**	**VKDP 33300 T**	⚠	CITROËN / PEUGEOT	E4239	**VKDA 35702 T**	**VKDP 32103 T**	⚠	SEAT
					E4239	**VKDA 37201 T**	**VKDP 32103 T**	⚠	SEAT
E3419	**VKDA 35302 T**	**VKDP 33300 T**	⚠	CITROËN / PEUGEOT	E4242	**VKD 35001 T**	**VKDP 33605 T**		VOLVO
					E4243	**VKDA 35702 T**	**VKDP 32103 T**	⚠	SEAT
E3420	**VKDC 35100 T**	**VKDP 32103 T**		AUDI	E4243	**VKDA 37201 T**	**VKDP 32103 T**	⚠	SEAT
E3437	**VKDC 35611 T**			VOLVO	E4244		**VKDP 93401 T**		MAZDA
E3440		**VKDP 33108 T**		LADA	E4246		**VKDP 81400 T**		MAZDA
E3444	**VKD 35032 T**	**VKDP 33406 T**		SAAB	E4249	**VKDC 81503 T**		⚠	MITSUBISHI / PROTON
E3445	**VKD 35032 T**	**VKDP 33406 T**		SAAB					
E3453	**VKDA 35520 T**	**VKDP 33403 T**		SAAB	E4249	**VKDC 81504 T**		⚠	MITSUBISHI / PROTON
E3454	**VKDA 35520 T**	**VKDP 33403 T**		SAAB					
E3801	**VKD 35021 T**	**VKDP 33111 T**	⚠	AUDI	E4259	**VKDC 35203 T**	**VKDP 31200 T**		FIAT

MONROE .../...

E4266	**VKDA 35201 T**	**VKDP 33800 T**		ALFA ROMEO
E4276	**VKDC 81103 T**			TOYOTA
E4279	**VKDA 35403 T**	**VKDP 33401 T**	⚠	FORD
E4279	**VKDA 35403 T**	**VKDP 31400 T**	⚠	FORD
E4279	**VKDA 35407 T**	**VKDP 33401 T**	⚠	FORD
E4279	**VKDA 35407 T**	**VKDP 31400 T**	⚠	FORD
E4282	**VKDA 88205 T**			NISSAN
E4288	**VKDA 35112 T**	**VKDP 33203 T**		SKODA
E4289	**VKDA 35403 T**	**VKDP 31400 T**	⚠	FORD
E4289	**VKDA 35403 T**	**VKDP 33401 T**	⚠	FORD
E4289	**VKDA 35406 T**	**VKDP 31400 T**	⚠	FORD
E4289	**VKDA 35406 T**	**VKDP 33401 T**	⚠	FORD
E4289	**VKDA 35407 T**	**VKDP 31400 T**	⚠	FORD
E4289	**VKDA 35407 T**	**VKDP 33401 T**	⚠	FORD
E4291	**VKDA 35111 T**	**VKDP 33107 T**	⚠	SEAT / VW
E4291	**VKDA 35111 T**	**VKDP 33800 T**	⚠	SEAT / VW
E4291	**VKDA 35115 T**	**VKDP 33107 T**	⚠	SEAT / VW
E4291	**VKDA 35115 T**	**VKDP 33800 T**	⚠	SEAT / VW
E4305		**VKDP 31400 T**		AUTOBIANCHI / LANCIA
E4309	**VKDA 88401 T**			MAZDA
E4310	**VKDA 35702 T**	**VKDP 33800 T**	⚠	SEAT
E4310	**VKDA 37201 T**	**VKDP 33800 T**	⚠	SEAT
E4316	**VKDA 88401 T**			MAZDA
E4317	**VKDA 35600 T**	**VKDP 31600 T**		RENAULT
E4320	**VKDA 35702 T**	**VKDP 33800 T**	⚠	FIAT / SEAT
E4320	**VKDA 37201 T**	**VKDP 33800 T**	⚠	FIAT / SEAT
E4322	**VKDA 35405 T**	**VKDP 33401 T**		FORD
E4323	**VKDA 35405 T**	**VKDP 33401 T**	⚠	FORD
E4323	**VKDA 35406 T**	**VKDP 33401 T**	⚠	FORD
E4324	**VKDA 35405 T**	**VKDP 33401 T**		FORD
E4328	**VKDA 35407 T**	**VKDP 33401 T**		FORD / MAZDA
E4329	**VKDA 35407 T**	**VKDP 33401 T**		FORD / MAZDA
E4334		**VKDP 33401 T**		HYUNDAI
E4340	**VKD 35001 T**	**VKDP 32600 T**	⚠	RENAULT
E4340	**VKDA 35615 T**	**VKDP 32600 T**	⚠	RENAULT
E4341	**VKDA 88202 T**	**VKDP 83201 T**	⚠	NISSAN
E4341	**VKDA 88203 T**	**VKDP 83201 T**	⚠	NISSAN
E4341	**VKDA 88204 T**	**VKDP 83201 T**	⚠	NISSAN
E4344	**VKDA 88203 T**		⚠	NISSAN
E4344	**VKDA 88204 T**		⚠	NISSAN
E4352	**VKDC 35203 T**			LANCIA
E4355	**VKDA 35110 T**	**VKDP 33100 T**	⚠	SEAT / VW
E4355	**VKDA 35110 T**	**VKDP 33107 T**	⚠	SEAT / VW
E4355	**VKDA 35110 T**	**VKDP 33108 T**	⚠	SEAT / VW
E4355	**VKDA 35115 T**	**VKDP 33100 T**	⚠	SEAT / VW
E4355	**VKDA 35115 T**	**VKDP 33107 T**	⚠	SEAT / VW
E4355	**VKDA 35115 T**	**VKDP 33108 T**	⚠	SEAT / VW
E4355	**VKDC 35101 T**	**VKDP 33100 T**	⚠	SEAT / VW
E4355	**VKDC 35101 T**	**VKDP 33107 T**	⚠	SEAT / VW
E4355	**VKDC 35101 T**	**VKDP 33108 T**	⚠	SEAT / VW
E4355	**VKDC 35102 T**	**VKDP 33100 T**	⚠	SEAT / VW
E4355	**VKDC 35102 T**	**VKDP 33107 T**	⚠	SEAT / VW
E4355	**VKDC 35102 T**	**VKDP 33108 T**	⚠	SEAT / VW
E4360	**VKDA 88203 T**			NISSAN
E4362	**VKDA 35407 T**			FORD
E4364	**VKDA 35500 T**	**VKDP 33500 T**	⚠	OPEL/VAUXHALL
E4364	**VKDA 35508 T**	**VKDP 33500 T**	⚠	OPEL/VAUXHALL
E4366	**VKDA 35615 T**	**VKDP 32600 T**		RENAULT
E4370	**VKD 35001 T**	**VKDP 32600 T**	⚠	RENAULT
E4370	**VKDA 35615 T**	**VKDP 32600 T**	⚠	RENAULT
E4371	**VKDA 35407 T**	**VKDP 33401 T**		FORD
E4372	**VKDA 35112 T**	**VKDP 33110 T**		SKODA
E4373	**VKDA 35113 T**	**VKDP 33101 T**		SEAT / SKODA / VW
E4374	**VKDA 88203 T**			NISSAN
E4380	**VKDA 35600 T**	**VKDP 31601 T**	⚠	RENAULT
E4380	**VKDA 35601 T**	**VKDP 31601 T**	⚠	RENAULT
E4382	**VKDA 35607 T**	**VKDP 31601 T**		RENAULT
E4383	**VKDA 35607 T**	**VKDP 31601 T**		RENAULT
E4386	**VKDA 35417 T**	**VKDP 33402 T**	⚠	FORD
E4386	**VKDA 35425 T**	**VKDP 33402 T**	⚠	FORD
E4390	**VKD 35005 T**			MERCEDES BENZ
E4395	**VKDA 35417 T**	**VKDP 33402 T**	⚠	FORD
E4395	**VKDA 35425 T**	**VKDP 33402 T**	⚠	FORD
E4399	**VKDA 35600 T**	**VKDP 31600 T**		RENAULT
E4402	**VKDA 35810 T**	**VKDP 33801 T**		MERCEDES BENZ
E4403	**VKDA 35603 T**	VKDP 32602 T	⚠	RENAULT
E4403	**VKDA 35604 T**	VKDP 32602 T	⚠	RENAULT
E4403	**VKDA 35605 T**	VKDP 32602 T	⚠	RENAULT
E4404	**VKDA 35303 T**	**VKDP 33300 T**		PEUGEOT
E4405	**VKDA 35303 T**	**VKDP 33300 T**		PEUGEOT
E4407	**VKDA 35304 T**	**VKDP 33300 T**	⚠	PEUGEOT
E4407	**VKDA 35305 T**	**VKDP 33300 T**	⚠	PEUGEOT
E4410	**VKDA 35811 T**	**VKDP 33801 T**		MERCEDES BENZ
E4414	**VKDA 35110 T**	**VKDP 33108 T**	⚠	VW
E4414	**VKDC 35100 T**	**VKDP 33100 T**	⚠	VW
E4414	**VKDC 35100 T**	**VKDP 33108 T**	⚠	VW
E4414	**VKDC 35101 T**	**VKDP 33100 T**	⚠	VW
E4414	**VKDC 35101 T**	**VKDP 33108 T**	⚠	VW
E4414	**VKDA 35110 T**	**VKDP 33100 T**	⚠	VW
E4415	**VKDC 35802 T**	**VKDP 33800 T**		BMW
E4421	**VKDA 35510 T**	**VKDP 33504 T**	⚠	OPEL/VAUXHALL
E4421	**VKDA 35511 T**	**VKDP 33504 T**	⚠	OPEL/VAUXHALL
E4422	**VKDA 40208 T**			ALFA ROMEO / FIAT / LANCIA
E4423	**VKDC 35213 T**		⚠	FIAT / LANCIA
E4423	**VKDC 35214 T**		⚠	FIAT / LANCIA
E4424		**VKDP 93203 T**		INFINITI / NISSAN
E4432	**VKDA 35303 T**	**VKDP 33300 T**		CITROËN / PEUGEOT
E4439	**VKDA 35319 T**	**VKDP 33308 T**		PEUGEOT
E4441	**VKDC 81503 T**	**VKDP 83503 T**		HYUNDAI / MITSUBISHI
E4442	**VKDA 35303 T**	**VKDP 33300 T**		PEUGEOT
E4444	**VKDC 81504 T**			MITSUBISHI / PROTON
E4454	**VKDA 35306 T**	**VKDP 33300 T**	⚠	PEUGEOT
E4454	**VKDA 35307 T**	**VKDP 33300 T**	⚠	PEUGEOT
E4456	**VKDA 35306 T**	**VKDP 33300 T**	⚠	CITROËN
E4456	**VKDA 35307 T**	**VKDP 33300 T**	⚠	CITROËN
E4458	**VKDA 35200 T**	**VKDP 33202 T**		FIAT / LANCIA
E4460	**VKDA 35200 T**	**VKDP 33202 T**		LANCIA
E4461	**VKDC 35802 T**	**VKDP 33800 T**		BMW
E4475	**VKDC 81505 T**			MITSUBISHI
E4476	**VKDA 35304 T**	**VKDP 33300 T**		PEUGEOT
E4477	**VKDC 35203 T**	**VKDP 31200 T**		FIAT
E4478	**VKDA 35110 T**	**VKDP 33100 T**	⚠	VW
E4478	**VKDA 35110 T**	**VKDP 33108 T**	⚠	VW
E4478	**VKDC 35101 T**	**VKDP 33100 T**	⚠	VW
E4478	**VKDC 35101 T**	**VKDP 33108 T**	⚠	VW
E4479	**VKDA 35110 T**	**VKDP 33100 T**	⚠	VW
E4479	**VKDA 35110 T**	**VKDP 33108 T**	⚠	VW
E4479	**VKDC 35101 T**	**VKDP 33100 T**	⚠	VW
E4479	**VKDC 35101 T**	**VKDP 33108 T**	⚠	VW
E4480	**VKDA 35200 T**	**VKDP 83201 T**		ALFA ROMEO
E4484	**VKDC 35634 T**	**VKDP 33500 T**		VOLVO
E4486	**VKDA 35402 T**	**VKDP 33400 T**		FORD
E4493	**VKDA 40400 T**	**VKDP 43403 T**		FORD
E4495	**VKDA 35623 T**	**VKDP 32601 T**		RENAULT
E4496	**VKDA 35623 T**	**VKDP 32601 T**		RENAULT
E4497		**VKDP 93203 T**		NISSAN
E4499	**VKDC 35634 T**	**VKDP 33500 T**		VOLVO

E4505	**VKDC 81201 T**			NISSAN	E4725	**VKDA 35508 T**		⚠	OPEL/VAUXHALL
E4507	**VKDA 35510 T**	**VKDP 33504 T**	⚠	OPEL/VAUXHALL	E4725	**VKDA 35509 T**		⚠	OPEL/VAUXHALL
E4507	**VKDA 35511 T**	**VKDP 33504 T**	⚠	OPEL/VAUXHALL	E4727	**VKDA 35607 T**	**VKDP 31601 T**		RENAULT
E4508	**VKDA 35510 T**	**VKDP 33504 T**	⚠	OPEL/VAUXHALL	E4741	**VKDA 35315 T**	**VKDP 33304 T**		PEUGEOT
E4508	**VKDA 35511 T**	**VKDP 33504 T**	⚠	OPEL/VAUXHALL	E4743		**VKDP 33500 T**		DAEWOO
E4513	**VKDA 35110 T**	**VKDP 33100 T**	⚠	SEAT / VW	E4745	**VKDA 35424 T**			FORD
E4513	**VKDA 35110 T**	**VKDP 33107 T**	⚠	SEAT / VW	E4747	**VKDA 35424 T**			FORD
E4513	**VKDA 35110 T**	**VKDP 33108 T**	⚠	SEAT / VW	E4749	**VKD 35001 T**	**VKDP 32600 T**	⚠	RENAULT
E4513	**VKDA 35115 T**	**VKDP 33100 T**	⚠	SEAT / VW	E4749	**VKDA 35615 T**	**VKDP 32600 T**	⚠	RENAULT
E4513	**VKDA 35115 T**	**VKDP 33107 T**	⚠	SEAT / VW	E4750	**VKD 35001 T**	**VKDP 31603 T**	⚠	RENAULT
E4513	**VKDA 35115 T**	**VKDP 33108 T**	⚠	SEAT / VW	E4750	**VKD 35001 T**	**VKDP 32600 T**	⚠	RENAULT
E4513	**VKDC 35101 T**	**VKDP 33100 T**	⚠	SEAT / VW	E4750	**VKDA 35615 T**	**VKDP 31603 T**	⚠	RENAULT
E4513	**VKDC 35101 T**	**VKDP 33107 T**	⚠	SEAT / VW	E4750	**VKDA 35615 T**	**VKDP 32600 T**	⚠	RENAULT
E4513	**VKDC 35101 T**	**VKDP 33108 T**	⚠	SEAT / VW	E4750	**VKDA 35625 T**	**VKDP 31603 T**	⚠	RENAULT
E4513	**VKDC 35102 T**	**VKDP 33100 T**	⚠	SEAT / VW	E4750	**VKDA 35625 T**	**VKDP 32600 T**	⚠	RENAULT
E4513	**VKDC 35102 T**	**VKDP 33107 T**	⚠	SEAT / VW	E4858	**VKDA 35113 T**	**VKDP 33101 T**		AUDI / SEAT / SKODA / VW
E4513	**VKDC 35102 T**	**VKDP 33108 T**	⚠	SEAT / VW					
E4519	**VKDA 35317 T**	**VKDP 33301 T**		CITROËN / FIAT / LANCIA / PEUGEOT	E4859	**VKDA 35306 T**	**VKDP 33300 T**	⚠	CITROËN / PEUGEOT
					E4859	**VKDA 35307 T**	**VKDP 33300 T**	⚠	CITROËN / PEUGEOT
E4520	**VKDA 35608 T**	**VKDP 33600 T**		VOLVO					
E4531	**VKDC 35802 T**	**VKDP 33800 T**		BMW	E4861	**VKDA 35306 T**	**VKDP 33300 T**	⚠	CITROËN / PEUGEOT
E4555	**VKDA 35200 T**	**VKDP 83201 T**		ALFA ROMEO					
E4556	**VKDA 35200 T**	**VKDP 83201 T**		ALFA ROMEO	E4861	**VKDA 35307 T**	**VKDP 33300 T**	⚠	CITROËN / PEUGEOT
E4558	**VKDC 35613 T**	**VKDP 33601 T**		MITSUBISHI / VOLVO	E4868	**VKD 35001 T**			RENAULT
E4562	**VKDA 35110 T**	**VKDP 33405 T**		FORD / SEAT / VW	E4869	**VKDA 35312 T**	**VKDP 32302 T**	⚠	PEUGEOT
E4564	**VKDC 35204 T**	**VKDP 33300 T**		FIAT	E4869	**VKDA 35312 T**	**VKDP 33308 T**	⚠	PEUGEOT
E4565	**VKDC 35204 T**	**VKDP 33300 T**		FIAT	E4872	**VKDA 35623 T**	**VKDP 32601 T**		RENAULT
E4569	**VKD 35001 T**	**VKDP 32600 T**	⚠	RENAULT	E4877	**VKDC 81112 T**	**VKDP 83106 T**		TOYOTA
E4569	**VKDA 35615 T**	**VKDP 32600 T**	⚠	RENAULT	E4879	**VKDA 40204 T**			ALFA ROMEO
E4570		**VKDP 84401 T**		FORD USA / MAZDA	E4880	**VKDA 35308 T**	**VKDP 32301 T**	⚠	PEUGEOT
					E4880	**VKDA 35308 T**	**VKDP 33306 T**	⚠	PEUGEOT
E4574	**VKDA 35312 T**	**VKDP 32302 T**	⚠	PEUGEOT	E4880	**VKDA 35308 T**	**VKDP 33303 T**	⚠	PEUGEOT
E4574	**VKDA 35312 T**	**VKDP 33308 T**	⚠	PEUGEOT	E4880	**VKDA 35309 T**	**VKDP 32301 T**	⚠	PEUGEOT
E4576	**VKDA 35319 T**	**VKDP 33308 T**		PEUGEOT	E4880	**VKDA 35309 T**	**VKDP 33306 T**	⚠	PEUGEOT
E4585	**VKDA 35402 T**	**VKDP 33400 T**		FORD	E4880	**VKDA 35309 T**	**VKDP 33303 T**	⚠	PEUGEOT
E4590	**VKDA 35200 T**	**VKDP 33202 T**	⚠	FIAT / LANCIA	E4882	**VKDA 35508 T**	**VKDP 34500 T**		OPEL/VAUXHALL
E4590	**VKDC 35204 T**	**VKDP 33202 T**	⚠	FIAT / LANCIA	E4884	**VKDA 35303 T**	**VKDP 33300 T**		PEUGEOT
E4592	**VKDA 35620 T**	**VKDP 32601 T**		RENAULT	E4886	**VKDA 35312 T**	**VKDP 32302 T**	⚠	PEUGEOT
E4593	**VKDA 35113 T**	**VKDP 33101 T**		AUDI / SKODA / VW	E4886	**VKDA 35312 T**	**VKDP 33308 T**	⚠	PEUGEOT
					E4888	**VKDA 35508 T**	**VKDP 34500 T**	⚠	OPEL/VAUXHALL
E4601	**VKDA 35603 T**	VKDP 32602 T	⚠	RENAULT	E4888	**VKDA 35509 T**	**VKDP 34500 T**	⚠	OPEL/VAUXHALL
E4601	**VKDA 35604 T**	VKDP 32602 T	⚠	RENAULT	E4890	**VKDA 35508 T**	**VKDP 34500 T**	⚠	OPEL/VAUXHALL
E4601	**VKDA 35605 T**	VKDP 32602 T	⚠	RENAULT	E4890	**VKDA 35509 T**	**VKDP 34500 T**	⚠	OPEL/VAUXHALL
E4607	**VKD 35020 T**			LANCIA	E4901	**VKDA 35508 T**	**VKDP 34500 T**	⚠	OPEL/VAUXHALL
E4618	**VKDC 35627 T**	**VKDP 33500 T**	⚠	VOLVO	E4901	**VKDA 35509 T**	**VKDP 34500 T**	⚠	OPEL/VAUXHALL
E4618	**VKDC 35634 T**	**VKDP 33500 T**	⚠	VOLVO	E4906	**VKDA 40204 T**			ALFA ROMEO
E4619	**VKDA 35521 T**			SAAB	E4908	**VKDA 35508 T**	**VKDP 34500 T**		OPEL/VAUXHALL
E4622	**VKDC 35814 T**		⚠	BMW	E4910	**VKDC 35814 T**	**VKDP 33800 T**		BMW
E4622	**VKDC 35815 T**		⚠	BMW	E4912	**VKDC 35814 T**	**VKDP 33800 T**		BMW
E4624	**VKDC 35814 T**		⚠	BMW	E4914	**VKDC 35814 T**	**VKDP 33800 T**		BMW
E4624	**VKDC 35815 T**		⚠	BMW	E4916	**VKDC 35814 T**	**VKDP 33800 T**		BMW
E4630		**VKDP 33802 T**		MERCEDES BENZ	E4937	**VKDA 35236 T**			FIAT
E4631		**VKDP 33802 T**		MERCEDES BENZ	E4942	**VKDA 35402 T**			FORD
E4632		**VKDP 33802 T**		MERCEDES BENZ	E4943	**VKDA 40400 T**			FORD
E4633		**VKDP 33802 T**		MERCEDES BENZ	E4945	**VKDA 35221 T**		⚠	FIAT
E4636	**VKDA 35521 T**			SAAB	E4945	**VKDA 35225 T**		⚠	FIAT
E4711	**VKDA 35112 T**	**VKDP 33100 T**	⚠	SKODA / VW	E4946	**VKDA 35220 T**		⚠	FIAT
E4711	**VKDA 35112 T**	**VKDP 33110 T**	⚠	SKODA / VW	E4946	**VKDA 35221 T**		⚠	FIAT
E4712	**VKDA 35220 T**		⚠	FIAT	E4946	**VKDA 35225 T**		⚠	FIAT
E4712	**VKDA 35221 T**		⚠	FIAT	E4947	**VKDA 35113 T**	**VKDP 33101 T**		AUDI / SKODA / VW
E4713	**VKDA 35115 T**	**VKDP 33800 T**		AUDI					
E4714	**VKDA 35600 T**	**VKDP 31600 T**		RENAULT	E4948	**VKDA 35113 T**	**VKDP 33101 T**		AUDI / SKODA / VW
E4722	**VKDA 35619 T**	**VKDP 31602 T**	⚠	RENAULT					
E4722	**VKDA 35626 T**	**VKDP 31602 T**	⚠	RENAULT	E4949	**VKDA 35113 T**	**VKDP 33101 T**		AUDI / SKODA / VW
E4723	**VKDA 35508 T**		⚠	OPEL/VAUXHALL					
E4723	**VKDA 35509 T**		⚠	OPEL/VAUXHALL	E4950	**VKDA 35113 T**			AUDI

MONROE .../...

E4951	**VKDA 35110 T**	**VKDP 33100 T**	⚠	SEAT
E4951	**VKDA 35115 T**	**VKDP 33100 T**	⚠	SEAT
E4952	**VKD 35018 T**			LANCIA
E4953	**VKD 35018 T**			LANCIA
E4954	**VKDA 35306 T**	**VKDP 33300 T**	⚠	CITROËN
E4954	**VKDA 35307 T**	**VKDP 33300 T**	⚠	CITROËN
E4956	**VKDA 35113 T**			SEAT
E4957	**VKDA 35306 T**	**VKDP 33300 T**	⚠	CITROËN
E4957	**VKDA 35307 T**	**VKDP 33300 T**	⚠	CITROËN
E4959	**VKDA 35319 T**			PEUGEOT
E4961	**VKDA 35306 T**	**VKDP 33300 T**		CITROËN
E4963	**VKDA 35508 T**	**VKDP 34500 T**		OPEL
E4965	**VKDC 35613 T**	**VKDP 33601 T**		VOLVO
E4967	**VKDC 35613 T**	**VKDP 33601 T**		VOLVO
E4971	**VKDA 35418 T**	**VKDP 33411 T**		FORD
E4973	**VKDA 35308 T**	**VKDP 33306 T**		PEUGEOT
E4980	**VKDA 35111 T**	**VKDP 33800 T**	⚠	VW
E4980	**VKDA 35111 T**	**VKDP 33107 T**	⚠	VW
E4980	**VKDA 35115 T**	**VKDP 33800 T**	⚠	VW
E4980	**VKDA 35115 T**	**VKDP 33107 T**	⚠	VW
E4981	**VKDC 35814 T**	**VKDP 33800 T**		BMW
E4983	**VKDC 35814 T**	**VKDP 33800 T**		BMW
E4985	**VKDA 35308 T**	**VKDP 33303 T**	⚠	PEUGEOT
E4985	**VKDA 35308 T**	**VKDP 33306 T**	⚠	PEUGEOT
E4989		**VKDP 83201 T**		TOYOTA
E4991	**VKDA 35308 T**	**VKDP 33303 T**	⚠	PEUGEOT
E4991	**VKDA 35308 T**	**VKDP 33306 T**	⚠	PEUGEOT
E4991	**VKDA 35309 T**	**VKDP 33303 T**	⚠	PEUGEOT
E4991	**VKDA 35309 T**	**VKDP 33306 T**	⚠	PEUGEOT
E4995	**VKDA 35316 T**			CITROËN
E4997	**VKDA 35115 T**	**VKDP 33800 T**		SEAT / SKODA / VW
E4998	**VKDA 35115 T**	**VKDP 33800 T**		AUDI / SEAT / SKODA / VW
E5039	**VKDA 40407 T**			FORD
E5079	**VKDA 40110 T**			AUDI / VW
E5087	**VKDA 40110 T**			AUDI / SKODA / VW
E5091	**VKDA 35230 T**	**VKDP 33207 T**		ALFA ROMEO
E5109	**VKDA 40401 T**	**VKDP 43400 T**		FORD / MAZDA
E5310	**VKDA 40805 T**			BMW
E5615	**VKDA 40610 T**		⚠	VOLVO
E5615	**VKDA 40616 T**		⚠	VOLVO
E7014	**VKDA 35317 T**			CITROËN / FIAT / LANCIA / PEUGEOT
E7025	**VKDA 35626 T**	**VKDP 31609 T**		RENAULT
E7026	**VKDA 35122 T**			VW
E7028	**VKDA 35122 T**			AUDI
E7029	**VKDA 35122 T**			SKODA / VW
E7030	**VKDA 35122 T**			AUDI
E7031	**VKDA 35122 T**			SKODA / VW
E7032	**VKDC 35802 T**	**VKDP 33800 T**		BMW
E7034	**VKDC 35802 T**	**VKDP 33800 T**		BMW
E7036	**VKDC 35802 T**	**VKDP 33800 T**		BMW
E7038	**VKDC 35802 T**			BMW
E7040	**VKDC 35821 T**			MINI
LA359	**VKDA 40610 T**			VOLVO
LA475	**VKDA 40805 T**			BMW
LA489	**VKDA 40805 T**			BMW
LA491	**VKDA 40110 T**			AUDI / VW
LA492	**VKDA 40300 T**			PEUGEOT
LA495	**VKDA 40304 T**			PEUGEOT
LL803	**VKDA 40101 T**	**VKDP 43100 T**	⚠	VW
LL803	**VKDA 40101 T**	**VKDP 43101 T**	⚠	VW
LL804	**VKDA 40101 T**	**VKDP 43100 T**		VW
LL805		**VKDP 43100 T**		VW
LL806		**VKDP 43101 T**		AUDI
LL814		**VKDP 43100 T**		VW
LL816		**VKDP 43700 T**		AUSTIN / ROVER
LL823		**VKDP 43700 T**		AUSTIN / ROVER
LL831		**VKDP 43102 T**		VW
LL836	**VKDA 40809 T**			BMW
LL837	**VKDA 40208 T**			ALFA ROMEO / FIAT / LANCIA
LL842		**VKDP 43400 T**		MAZDA
LL843		**VKDP 93203 T**		NISSAN
LL844		**VKDP 93203 T**		NISSAN
LL845		**VKDP 93203 T**		NISSAN
LL846		**VKDP 93203 T**		NISSAN
LL847	**VKDA 40110 T**			AUDI
LL848	**VKDA 40407 T**			FORD
LL851	**VKDA 40113 T**			AUDI
LL860	**VKDA 40101 T**	**VKDP 44100 T**		VW
MG210	**VKDC 81105 T**			TOYOTA
MG216	**VKDC 35801 T**	**VKDP 33800 T**		BMW
MG225		**VKDP 33108 T**		LADA
MG231	**VKD 35001 T**			PEUGEOT
MG236	**VKDC 81102 T**		⚠	TOYOTA
MG236	**VKDC 81104 T**		⚠	TOYOTA
MG247	**VKDA 35501 T**	**VKDP 33500 T**		OPEL/VAUXHALL
MG249	**VKDA 35300 T**	**VKDP 34303 T**		CITROËN
MG250	**VKDC 35611 T**			VOLVO
MG251	**VKDA 35608 T**	**VKDP 33600 T**		VOLVO
MG253	**VKDC 35504 T**	**VKDP 33500 T**	⚠	DAEWOO / OPEL / VAUXHALL
MG253	**VKDC 35505 T**	**VKDP 33500 T**	⚠	DAEWOO / OPEL / VAUXHALL
MG259	**VKDA 35503 T**	**VKDP 33500 T**	⚠	OPEL/VAUXHALL
MG259	**VKDA 35503 T**	**VKDP 33501 T**	⚠	OPEL/VAUXHALL
MG259	**VKDA 35515 T**	**VKDP 33500 T**	⚠	OPEL/VAUXHALL
MG259	**VKDA 35515 T**	**VKDP 33501 T**	⚠	OPEL/VAUXHALL
MG264	**VKD 35032 T**	**VKDP 33406 T**		SAAB
MG265	**VKD 35032 T**	**VKDP 33406 T**		SAAB
MG268	**VKDA 35501 T**	**VKDP 33500 T**		OPEL/VAUXHALL
MG269	**VKDC 35100 T**	**VKDP 32103 T**		AUDI
MG270	**VKDC 81104 T**		⚠	TOYOTA
MG270	**VKDC 81105 T**		⚠	TOYOTA
MG275	**VKDA 35520 T**	**VKDP 33403 T**		SAAB
MG276	**VKDA 35520 T**	**VKDP 33403 T**		SAAB
MG306		**VKDP 33800 T**		BMW
MG307	**VKDC 35801 T**	**VKDP 33800 T**		BMW
MG308	**VKDC 35801 T**	**VKDP 33800 T**		BMW
MG309		**VKDP 33800 T**		BMW
MG311	**VKDC 35801 T**	**VKDP 33800 T**		BMW
MG312	**VKDC 35801 T**	**VKDP 33800 T**		BMW
MG313		**VKDP 33800 T**		BMW
MG315	**VKD 35021 T**	**VKDP 33104 T**	⚠	AUDI
MG315	**VKD 35021 T**	**VKDP 33111 T**	⚠	AUDI
MG315	**VKD 35023 T**	**VKDP 33104 T**	⚠	AUDI
MG315	**VKD 35023 T**	**VKDP 33111 T**	⚠	AUDI
MG315	**VKDA 35118 T**	**VKDP 33104 T**	⚠	AUDI
MG315	**VKDA 35118 T**	**VKDP 33111 T**	⚠	AUDI
MG829	**VKDC 35820 T**	**VKDP 33800 T**		BMW
MG871	**VKDC 35801 T**	**VKDP 33800 T**		BMW
MG882	**VKDC 81104 T**			TOYOTA
MG883	**VKDC 35101 T**	**VKDP 33100 T**	⚠	VW
MG883	**VKDC 35102 T**	**VKDP 33100 T**	⚠	VW
MG884	**VKDA 35112 T**	**VKDP 33203 T**		SKODA
MG885	**VKDC 81105 T**			TOYOTA
MG887	**VKDC 35232 T**			FIAT
MG960	**VKD 35012 T**	**VKDP 33603 T**		VOLVO
MG971	**VKDC 35801 T**	**VKDP 33800 T**		BMW

							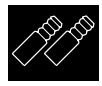		
MG998	**VKDC 35801 T**	**VKDP 33800 T**		BMW	R1000	**VKDA 35111 T**	**VKDP 33100 T**	⚠	JEEP /
MR211	**VKDC 81104 T**		⚠	TOYOTA					MITSUBISHI /
MR211	**VKDC 81105 T**		⚠	TOYOTA					TOYOTA / VW
MR213	**VKDA 35608 T**	**VKDP 33600 T**		VOLVO	R1596		**VKDP 93401 T**		MAZDA
MR217	**VKD 35005 T**	**VKDP 33500 T**	⚠	OPEL/VAUXHALL	R1608	**VKDA 40218 T**		⚠	FIAT
MR217	VKDA 35513 T	**VKDP 33500 T**	⚠	OPEL/VAUXHALL	R1608	**VKDA 40219 T**		⚠	FIAT
MR223	**VKD 35001 T**			PEUGEOT	R2689	**VKDA 40407 T**			FORD
MR227	**VKDA 35300 T**	**VKDP 34303 T**	⚠	CITROËN	R3248	**VKDA 35602 T**	VKDP 31606 T		RENAULT
MR227	**VKDA 35302 T**	**VKDP 34303 T**	⚠	CITROËN	R3282		**VKDP 43700 T**		AUDI
MR240	**VKDA 35501 T**	**VKDP 33500 T**		OPEL/VAUXHALL	R3310		**VKDP 43700 T**		AUSTIN / ROVER
MR257	**VKDC 35100 T**	**VKDP 32103 T**		AUDI	R3311		**VKDP 43700 T**		AUSTIN / ROVER
MR258	**VKDA 35503 T**	**VKDP 33500 T**	⚠	OPEL/VAUXHALL	R3712		**VKDP 43101 T**		AUDI
MR258	**VKDA 35503 T**	**VKDP 33501 T**	⚠	OPEL/VAUXHALL	R3715	**VKDA 40101 T**	**VKDP 43100 T**	⚠	VW
MR258	**VKDA 35515 T**	**VKDP 33500 T**	⚠	OPEL/VAUXHALL	R3715	**VKDA 40101 T**	**VKDP 43101 T**	⚠	VW
MR258	**VKDA 35515 T**	**VKDP 33501 T**	⚠	OPEL/VAUXHALL	R3719		**VKDP 43101 T**		BMW
MR260	**VKDA 35300 T**	**VKDP 33300 T**	⚠	CITROËN /	R3720	**VKDA 40102 T**	**VKDP 43102 T**		AUDI / VW
				PEUGEOT	R3723		**VKDP 43100 T**		VW
MR260	**VKDA 35302 T**	**VKDP 33300 T**	⚠	CITROËN /	R3726		**VKDP 43100 T**		VW
				PEUGEOT	R3727		**VKDP 43400 T**		MAZDA
MR277	**VKDA 35302 T**	**VKDP 33300 T**		PEUGEOT	R3728	**VKDA 40101 T**	**VKDP 43100 T**		SEAT / VW /
MR304	**VKD 35023 T**	**VKDP 33104 T**		AUDI					ZASTAVA
MR310	**VKD 35021 T**	**VKDP 33104 T**	⚠	AUDI	R3735		**VKDP 93201 T**		NISSAN
MR310	**VKD 35021 T**	**VKDP 33111 T**	⚠	AUDI	R3738		**VKDP 43101 T**		AUDI
MR310	**VKD 35023 T**	**VKDP 33104 T**	⚠	AUDI	R3745		**VKDP 43102 T**		VW
MR310	**VKD 35023 T**	**VKDP 33111 T**	⚠	AUDI	R3756	**VKDA 40407 T**			FORD
MR310	**VKDA 35118 T**	**VKDP 33104 T**	⚠	AUDI	R3772	**VKDA 40407 T**			FORD
MR310	**VKDA 35118 T**	**VKDP 33111 T**	⚠	AUDI	R3775	**VKDA 40101 T**	**VKDP 43100 T**		VW
MR826	**VKDA 35110 T**	**VKDP 33100 T**	⚠	VW	R3778	**VKDA 40113 T**			AUDI
MR826	**VKDC 35105 T**	**VKDP 33100 T**	⚠	VW	R3796	**VKDA 40101 T**	**VKDP 43105 T**		SEAT / VW
MR828	**VKDC 35103 T**	**VKDP 32103 T**	⚠	AUDI / VW	R3805	**VKDA 40600 T**	**VKDP 41600 T**		RENAULT
MR828	**VKDC 35103 T**	**VKDP 33102 T**	⚠	AUDI / VW	R3806	**VKDA 40401 T**	**VKDP 43400 T**	⚠	FORD
MR829	**VKDC 35820 T**	**VKDP 33800 T**		BMW	R3806	**VKDA 40407 T**	**VKDP 43400 T**	⚠	FORD
MR861		**VKDP 81400 T**		MAZDA	R3815	**VKDA 40101 T**	**VKDP 43103 T**	⚠	VW
MR873	**VKDC 35101 T**	**VKDP 33100 T**	⚠	VW	R3815	**VKDA 40104 T**	**VKDP 43103 T**	⚠	VW
MR873	**VKDC 35102 T**	**VKDP 33100 T**	⚠	VW	R3888		**VKDP 43102 T**		VW
MR874	**VKDC 81105 T**			TOYOTA	R3954	**VKDA 40600 T**	**VKDP 41600 T**		RENAULT
MR940		**VKDP 33800 T**		BMW	R6335	**VKDA 40110 T**			AUDI
MR945	**VKDA 35201 T**			ALFA ROMEO	R6515	**VKDA 35607 T**	**VKDP 31601 T**		RENAULT
MR950	**VKDC 35611 T**			VOLVO	R6652	**VKDA 40300 T**			PEUGEOT
MR960	**VKD 35012 T**	**VKDP 33603 T**		VOLVO	R6653	**VKDA 40300 T**			PEUGEOT
MR970		**VKDP 33501 T**		OPEL/VAUXHALL	S1033		**VKDP 43100 T**		VW
MR975		**VKDP 33501 T**		OPEL/VAUXHALL	S1044		**VKDP 43700 T**		AUSTIN / ROVER
MR976	**VKDC 35100 T**	**VKDP 32103 T**	⚠	AUDI / VW	S1045		**VKDP 43700 T**		AUSTIN / ROVER
MR976	**VKDC 35100 T**	**VKDP 33100 T**	⚠	AUDI / VW	S1090	**VKDA 40113 T**	**VKDP 43101 T**		AUDI
MR983	**VKDC 35504 T**	**VKDP 33500 T**	⚠	DAEWOO / OPEL /	S1091	**VKDA 40407 T**			FORD
				VAUXHALL	S1097	**VKDA 40101 T**			VW
MR983	**VKDC 35505 T**	**VKDP 33500 T**	⚠	DAEWOO / OPEL /	S1101	**VKDA 40407 T**			FORD
				VAUXHALL	S1150	**VKDA 40407 T**	**VKDP 43400 T**		FORD
MR986	**VKDC 35820 T**	**VKDP 33800 T**		BMW	S1151		**VKDP 43400 T**		FORD
MR993	**VKD 35005 T**	**VKDP 33500 T**	⚠	OPEL/VAUXHALL	S1154	**VKDA 40407 T**			FORD
MR993	VKDA 35513 T	**VKDP 33500 T**	⚠	OPEL/VAUXHALL	S1157	**VKDA 40407 T**			FORD
MR999	**VKD 35001 T**			PEUGEOT /	S1229	**VKDA 40121 T**	**VKDP 43102 T**	⚠	AUDI
				TALBOT	S1229	**VKDA 40121 T**	**VKDP 43104 T**	⚠	AUDI
R1000	**VKDA 35110 T**	**VKDP 33107 T**	⚠	JEEP /	S1229	**VKDA 40122 T**	**VKDP 43102 T**	⚠	AUDI
				MITSUBISHI /	S1229	**VKDA 40122 T**	**VKDP 43104 T**	⚠	AUDI
				TOYOTA / VW	S1250	**VKDA 40121 T**	**VKDP 43102 T**	⚠	AUDI
R1000	**VKDA 35110 T**	**VKDP 33108 T**	⚠	JEEP /	S1250	**VKDA 40121 T**	**VKDP 43104 T**	⚠	AUDI
				MITSUBISHI /	S1250	**VKDA 40122 T**	**VKDP 43102 T**	⚠	AUDI
				TOYOTA / VW	S1250	**VKDA 40122 T**	**VKDP 43104 T**	⚠	AUDI
R1000	**VKDA 35110 T**	**VKDP 33100 T**	⚠	JEEP /	S2023	**VKDA 40809 T**			BMW
				MITSUBISHI /	S3007	**VKDC 35101 T**	**VKDP 33100 T**	⚠	VW
				TOYOTA / VW	S3007	**VKDC 35102 T**	**VKDP 33100 T**	⚠	VW
R1000	**VKDA 35111 T**	**VKDP 33107 T**	⚠	JEEP /	S3407	**VKDA 35608 T**	**VKDP 33600 T**		VOLVO
				MITSUBISHI /	S3414	**VKD 35005 T**	**VKDP 33500 T**	⚠	OPEL/VAUXHALL
				TOYOTA / VW	S3414	VKDA 35513 T	**VKDP 33500 T**	⚠	OPEL/VAUXHALL
R1000	**VKDA 35111 T**	**VKDP 33108 T**	⚠	JEEP /	S3421	**VKDA 35608 T**	**VKDP 33600 T**		VOLVO
				MITSUBISHI /	S3430	**VKDC 35100 T**	**VKDP 32103 T**		AUDI
				TOYOTA / VW	S3439	**VKDA 35300 T**	**VKDP 34303 T**		CITROËN

MONROE .../...

S3443		**VKDP 33501 T**		OPEL/VAUXHALL
S3451	**VKD 35005 T**	**VKDP 33500 T**	⚠	OPEL/VAUXHALL
S3451	VKDA 35513 T	**VKDP 33500 T**	⚠	OPEL/VAUXHALL
S3812	**VKDC 35100 T**			AUDI
S4206	**VKDA 35403 T**	**VKDP 31400 T**	⚠	FORD
S4206	**VKDA 35409 T**	**VKDP 31400 T**	⚠	FORD
S4219	**VKDA 35110 T**	**VKDP 33100 T**	⚠	SEAT / VW
S4219	**VKDA 35110 T**	**VKDP 33108 T**	⚠	SEAT / VW
S4219	**VKDC 35101 T**	**VKDP 33100 T**	⚠	SEAT / VW
S4219	**VKDC 35101 T**	**VKDP 33108 T**	⚠	SEAT / VW
S4219	**VKDC 35102 T**	**VKDP 33100 T**	⚠	SEAT / VW
S4219	**VKDC 35102 T**	**VKDP 33108 T**	⚠	SEAT / VW
S4222	**VKDA 35403 T**	**VKDP 31400 T**	⚠	FORD
S4222	**VKDA 35409 T**	**VKDP 31400 T**	⚠	FORD
S4223	**VKDA 35403 T**	**VKDP 31400 T**	⚠	FORD
S4223	**VKDA 35409 T**	**VKDP 31400 T**	⚠	FORD
S4230	**VKDA 35403 T**	**VKDP 33409 T**		FORD
S4232	**VKDA 35403 T**	**VKDP 33409 T**		FORD
S4233	**VKDA 37204 T**	**VKDP 31400 T**		FIAT
S4237	**VKDA 35702 T**	**VKDP 32103 T**	⚠	SEAT
S4237	**VKDA 37201 T**	**VKDP 32103 T**	⚠	SEAT
S4258	**VKDA 35601 T**	**VKDP 31601 T**		RENAULT
S4262	**VKD 35012 T**			AUSTIN / ROVER
S4263	**VKD 35012 T**			AUSTIN / ROVER
S4264	**VKDA 35201 T**	**VKDP 33800 T**		ALFA ROMEO
S4269		**VKDP 93401 T**		MAZDA
S4278	**VKDA 35401 T**	**VKDP 33401 T**		FORD
S4281	**VKDA 35403 T**			FORD
S4283		**VKDP 33500 T**		OPEL/VAUXHALL
S4286	**VKDA 35403 T**	**VKDP 31400 T**	⚠	FORD
S4286	**VKDA 35409 T**	**VKDP 31400 T**	⚠	FORD
S4287	**VKDA 37201 T**	**VKDP 31400 T**	⚠	FIAT / SEAT / ZASTAVA
S4287	**VKDA 37204 T**	**VKDP 31400 T**	⚠	FIAT / SEAT / ZASTAVA
S4292	**VKDA 35201 T**	**VKDP 33800 T**		ALFA ROMEO
S4297		**VKDP 84402 T**		MAZDA
S4299		**VKDP 93402 T**		MAZDA
S4381	**VKDA 35601 T**	**VKDP 31601 T**		RENAULT
S4408	**VKDA 35306 T**	**VKDP 33300 T**	⚠	CITROËN
S4408	**VKDA 35307 T**	**VKDP 33300 T**	⚠	CITROËN
S4409	**VKDA 35306 T**	**VKDP 33300 T**	⚠	CITROËN
S4409	**VKDA 35307 T**	**VKDP 33300 T**	⚠	CITROËN
S4428	**VKDA 35400 T**	**VKDP 33405 T**	⚠	FORD
S4428	**VKDA 35416 T**	**VKDP 33405 T**	⚠	FORD
S4429	**VKD 35013 T**	**VKDP 33405 T**	⚠	FORD
S4429	**VKDA 35400 T**	**VKDP 33405 T**	⚠	FORD
S4429	**VKDA 35416 T**	**VKDP 33405 T**	⚠	FORD
S4471	**VKDA 35306 T**	**VKDP 33300 T**	⚠	CITROËN
S4471	**VKDA 35307 T**	**VKDP 33300 T**	⚠	CITROËN
S4491	**VKDA 35510 T**	**VKDP 33504 T**	⚠	OPEL/VAUXHALL
S4491	**VKDA 35511 T**	**VKDP 33504 T**	⚠	OPEL/VAUXHALL
S4494	**VKDC 35420 T**			SAAB
S4510	**VKDA 35303 T**	**VKDP 33300 T**		PEUGEOT
S4516	**VKDA 35110 T**	**VKDP 33108 T**	⚠	VW
S4516	**VKDC 35100 T**	**VKDP 33108 T**	⚠	VW
S4516	**VKDC 35101 T**	**VKDP 33108 T**	⚠	VW
S4518	**VKDA 35200 T**	**VKDP 33202 T**		LANCIA
S4523	**VKDC 35802 T**	**VKDP 33800 T**		BMW
S4525	**VKDC 35802 T**	**VKDP 33800 T**		BMW
S4529	**VKDC 35802 T**	**VKDP 33800 T**		BMW
S4531	**VKDC 35802 T**	**VKDP 33800 T**		BMW
S4534	**VKDA 35810 T**	**VKDP 33801 T**		MERCEDES BENZ
S4535	**VKDA 35303 T**	**VKDP 33300 T**		PEUGEOT
S4549	**VKDA 35200 T**			LANCIA
S4598	**VKDC 35802 T**			BMW
S4612	**VKDA 40400 T**	**VKDP 43403 T**		FORD
S4863	**VKDA 35319 T**	**VKDP 33308 T**		PEUGEOT
V1054	**VKDA 37204 T**	**VKDP 31400 T**		FIAT / LANCIA
V1055	**VKDA 37204 T**	**VKDP 31400 T**		FIAT / LANCIA
V1063		**VKDP 33501 T**		MAZDA / OPEL / RANGER
V1079	**VKDA 37204 T**	**VKDP 31400 T**		FIAT / LANCIA
V1089	**VKDC 81201 T**			DAF / NISSAN
V1102	**VKDA 37204 T**	**VKDP 31400 T**		FIAT
V4201	**VKDA 35317 T**	**VKDP 33301 T**		CITROËN / FIAT / LANCIA / PEUGEOT
V4301	**VKDA 35813 T**			MERCEDES BENZ
V4403	**VKD 35016 T**	**VKDP 33311 T**		CITROËN / FIAT / PEUGEOT
V4407	**VKD 35016 T**	**VKDP 33311 T**	⚠	CITROËN / FIAT / PEUGEOT
V4407	**VKDA 35313 T**	**VKDP 33311 T**	⚠	CITROËN / FIAT / PEUGEOT
V4408	**VKDA 35415 T**			FORD
V4409	**VKDA 35415 T**			FORD
V4501	**VKDA 35313 T**	**VKDP 33311 T**		CITROËN / FIAT / PEUGEOT
V4502	**VKDA 35423 T**	***VKDP 33410 T***		FORD
V4504	**VKDA 35622 T**			CITROËN / FIAT / PEUGEOT

SACHS

100 229	**VKDC 35105 T**	**VKDP 33100 T**		VW
100 237	**VKDC 35103 T**	**VKDP 32103 T**	⚠	AUDI / VW
100 237	**VKDC 35103 T**	**VKDP 33102 T**	⚠	AUDI / VW
100 261	**VKDC 35611 T**			VOLVO
100 274	**VKDC 35820 T**	**VKDP 33800 T**		BMW
100 316		**VKDP 31400 T**		FORD
100 319		**VKDP 33501 T**		OPEL/VAUXHALL
100 320	**VKD 35012 T**	**VKDP 33603 T**		VOLVO
100 321		**VKDP 33501 T**		OPEL/VAUXHALL
100 338	**VKDC 35504 T**	**VKDP 33500 T**	⚠	DAEWOO / OPEL / VAUXHALL
100 338	**VKDC 35505 T**	**VKDP 33500 T**	⚠	DAEWOO / OPEL / VAUXHALL
100 352	**VKDA 35403 T**	**VKDP 31400 T**	⚠	FORD
100 352	**VKDA 35409 T**	**VKDP 31400 T**	⚠	FORD
100 384		**VKDP 33800 T**		BMW
100 388	**VKDC 35801 T**	**VKDP 33800 T**		BMW
100 389	**VKD 35001 T**			PEUGEOT / TALBOT
100 390	**VKD 35005 T**	**VKDP 33500 T**	⚠	OPEL/VAUXHALL
100 390	VKDA 35513 T	**VKDP 33500 T**	⚠	OPEL/VAUXHALL
100 442	**VKDA 35403 T**	**VKDP 33409 T**		FORD
100 445	**VKDA 35403 T**	**VKDP 33409 T**		FORD
100 454		**VKDP 33501 T**		OPEL/VAUXHALL
100 456	**VKDC 35801 T**	**VKDP 33800 T**		BMW
100 457	**VKDC 35801 T**	**VKDP 33800 T**		BMW
100 464	**VKD 35005 T**	**VKDP 33500 T**	⚠	OPEL/VAUXHALL
100 464	VKDA 35513 T	**VKDP 33500 T**	⚠	OPEL/VAUXHALL
100 474	**VKDC 35105 T**	**VKDP 33100 T**		VW
100 517	**VKDC 35102 T**	**VKDP 33100 T**		VW
100 522	**VKD 35005 T**	**VKDP 33500 T**	⚠	OPEL/VAUXHALL
100 522	VKDA 35513 T	**VKDP 33500 T**	⚠	OPEL/VAUXHALL
100 524	**VKDA 35403 T**	**VKDP 31400 T**	⚠	FORD
100 524	**VKDA 35409 T**	**VKDP 31400 T**	⚠	FORD
100 567	**VKDA 35403 T**			FORD
100 568	**VKD 35005 T**	**VKDP 33500 T**	⚠	OPEL/VAUXHALL
100 568	VKDA 35513 T	**VKDP 33500 T**	⚠	OPEL/VAUXHALL

100 572	**VKDC 35801 T**	**VKDP 33800 T**		BMW
100 573	**VKDC 35820 T**	**VKDP 33800 T**		BMW
100 589	**VKDC 35103 T**	**VKDP 32103 T**	⚠	AUDI / VW
100 589	**VKDC 35103 T**	**VKDP 33102 T**	⚠	AUDI / VW
100 590	**VKDC 35801 T**	**VKDP 33800 T**		BMW
100 591	**VKDA 35403 T**	**VKDP 31400 T**	⚠	FORD
100 591	**VKDA 35409 T**	**VKDP 31400 T**	⚠	FORD
100 593	**VKDC 35801 T**	**VKDP 33800 T**		BMW
100 594	**VKDC 35100 T**	**VKDP 32103 T**	⚠	AUDI / VW
100 594	**VKDC 35100 T**	**VKDP 33100 T**	⚠	AUDI / VW
100 597	**VKDC 35611 T**			VOLVO
100 610	**VKDC 35820 T**	**VKDP 33800 T**		BMW
100 620	**VKDA 35400 T**	**VKDP 33405 T**	⚠	FORD
100 620	**VKDA 35416 T**	**VKDP 33405 T**	⚠	FORD
100 656	**VKDA 35608 T**	**VKDP 33600 T**		VOLVO
100 659	**VKDA 35608 T**	**VKDP 33600 T**		VOLVO
100 662	**VKDA 35608 T**	**VKDP 33600 T**		VOLVO
100 667	**VKDA 35112 T**	**VKDP 33203 T**		SKODA
100 678	**VKDC 35504 T**	**VKDP 33500 T**	⚠	DAEWOO / OPEL / VAUXHALL
100 678	**VKDC 35505 T**	**VKDP 33500 T**	⚠	DAEWOO / OPEL / VAUXHALL
100 685	**VKDA 35510 T**	**VKDP 33504 T**		OPEL/VAUXHALL
100 686	**VKDA 35510 T**	**VKDP 33504 T**		OPEL/VAUXHALL
100 710	**VKDA 35510 T**	**VKDP 33504 T**	⚠	OPEL/VAUXHALL
100 710	**VKDA 35511 T**	**VKDP 33504 T**	⚠	OPEL/VAUXHALL
100 717		**VKDP 33801 T**		MERCEDES BENZ
100 729		**VKDP 33800 T**		BMW
100 757		**VKDP 33800 T**		BMW
100 758	**VKDC 35105 T**	**VKDP 33100 T**		VW
100 759	**VKDC 35102 T**	**VKDP 33100 T**		VW
100 786	**VKDC 35100 T**	**VKDP 33100 T**	⚠	AUDI / VW
100 786	**VKDC 35100 T**	**VKDP 32103 T**	⚠	AUDI / VW
100 797	**VKDC 35801 T**	**VKDP 33800 T**		BMW
100 798	**VKDC 35801 T**	**VKDP 33800 T**		BMW
100 799	**VKD 35001 T**			PEUGEOT
100 812	**VKDC 35801 T**	**VKDP 33800 T**		BMW
100 831		**VKDP 33108 T**		LADA
100 857	**VKDC 35801 T**	**VKDP 33800 T**		BMW
100 863		**VKDP 33800 T**		BMW
100 864	**VKDA 35403 T**	**VKDP 31400 T**	⚠	FORD
100 864	**VKDA 35409 T**	**VKDP 31400 T**	⚠	FORD
100 926	**VKDA 37201 T**	**VKDP 31400 T**	⚠	FIAT / SEAT
100 926	**VKDA 37204 T**	**VKDP 31400 T**	⚠	FIAT / SEAT
100 954	**VKDA 35319 T**	**VKDP 33308 T**		PEUGEOT
100 955	**VKDA 35319 T**	**VKDP 33308 T**		PEUGEOT
100 956	**VKDA 35222 T**		⚠	ALFA ROMEO
100 956	**VKDA 35223 T**		⚠	ALFA ROMEO
100 957	**VKDA 40208 T**			ALFA ROMEO
101 194	**VKDA 35201 T**			ALFA ROMEO
101 206		**VKDP 43101 T**		AUDI
101 532		**VKDP 43101 T**		BMW
101 616		**VKDP 43101 T**		VW
101 736		**VKDP 43700 T**		AUDI / MOSKVICH
101 740		**VKDP 43700 T**		AUDI
101 852		**VKDP 43101 T**		AUDI
102 209	**VKDA 40809 T**			BMW
102 210	**VKDA 40809 T**			BMW
102 211	**VKDA 40809 T**			BMW
102 212	**VKDA 40809 T**			BMW
102 282	**VKDA 40809 T**			BMW
102 283	**VKDA 40809 T**			BMW
102 462	**VKDA 40809 T**			BMW
102 463	**VKDA 40809 T**			BMW
102 495	**VKDA 40813 T**			BMW
102 500	**VKDA 40813 T**			BMW
102 817	**VKDA 40813 T**			BMW
102 818	**VKDA 40813 T**			BMW
105 063		**VKDP 43100 T**		SKODA
105 712	**VKDA 40102 T**	**VKDP 43102 T**		AUDI / VW
105 723		**VKDP 43100 T**		VW
105 737	**VKDA 40805 T**			BMW
105 739	**VKDA 40101 T**	**VKDP 43100 T**		SEAT / VW
105 740	**VKDA 40101 T**	**VKDP 43100 T**		SEAT / VW
105 741		**VKDP 43101 T**		VW
105 748	**VKDA 40101 T**	**VKDP 43100 T**		SEAT / VW
105 749		**VKDP 43100 T**		VW
105 750	**VKDA 40805 T**			BMW
105 759	**VKDA 40101 T**	**VKDP 43100 T**		SEAT / VW
105 762	**VKDA 40805 T**			BMW
105 765	**VKDA 40101 T**			VW
105 769	**VKDA 40101 T**	**VKDP 43100 T**	⚠	VW
105 769	**VKDA 40101 T**	**VKDP 43102 T**	⚠	VW
105 775	**VKDA 40101 T**	**VKDP 43100 T**		VW
105 776	**VKDA 40101 T**	**VKDP 43100 T**	⚠	VW
105 776	**VKDA 40101 T**	**VKDP 43102 T**	⚠	VW
105 781		**VKDP 43102 T**		VW
105 782		**VKDP 43101 T**		AUDI
105 798	**VKDA 40407 T**			FORD
105 799	**VKDA 40407 T**			FORD
105 802	**VKDA 40805 T**			BMW
105 813		**VKDP 43102 T**		VW
105 822	**VKDA 40113 T**	**VKDP 43101 T**		AUDI
105 825	**VKDA 40407 T**			FORD
105 828	**VKDA 40610 T**			VOLVO
110 021	**VKDA 35303 T**	**VKDP 33300 T**		CITROËN / PEUGEOT / TALBOT
110 026	**VKDA 35702 T**	**VKDP 33800 T**	⚠	FIAT / SEAT
110 026	**VKDA 37201 T**	**VKDP 33800 T**	⚠	FIAT / SEAT
110 184	**VKDC 35207 T**			LANCIA
110 194		**VKDP 81400 T**		MAZDA
110 195		**VKDP 81400 T**		MAZDA
110 196		**VKDP 93401 T**		MAZDA
110 197		**VKDP 93401 T**		MAZDA
110 236	**VKDA 35403 T**	**VKDP 31400 T**	⚠	FORD
110 236	**VKDA 35409 T**	**VKDP 31400 T**	⚠	FORD
110 241		**VKDP 83201 T**		NISSAN
110 242		**VKDP 83201 T**		NISSAN
110 243		**VKDP 93201 T**		NISSAN
110 249		**VKDP 81505 T**		MITSUBISHI
110 251	**VKDC 81105 T**			TOYOTA
110 256	**VKDA 35500 T**	**VKDP 33500 T**		OPEL/VAUXHALL
110 267	**VKD 35001 T**	**VKDP 32600 T**		RENAULT
110 280	**VKDA 35602 T**	VKDP 31606 T		RENAULT
110 292		**VKDP 43400 T**		MAZDA
110 294		**VKDP 93402 T**		MAZDA
110 296	**VKDA 81501 T**	**VKDP 81505 T**	⚠	MITSUBISHI
110 296	**VKDA 81501 T**	**VKDP 83502 T**	⚠	MITSUBISHI
110 296	**VKDA 81502 T**	**VKDP 81505 T**	⚠	MITSUBISHI
110 296	**VKDA 81502 T**	**VKDP 83502 T**	⚠	MITSUBISHI
110 307	**VKDA 37202 T**	**VKDP 31400 T**		FIAT
110 313	**VKDA 35403 T**	**VKDP 31400 T**	⚠	FORD
110 313	**VKDA 35409 T**	**VKDP 31400 T**	⚠	FORD
110 322	**VKDA 35403 T**	**VKDP 31400 T**	⚠	FORD
110 322	**VKDA 35409 T**	**VKDP 31400 T**	⚠	FORD
110 333	**VKDA 35602 T**	VKDP 31606 T		RENAULT
110 341	**VKDA 35702 T**	**VKDP 32103 T**	⚠	SEAT
110 341	**VKDA 37201 T**	**VKDP 32103 T**	⚠	SEAT
110 372	**VKDC 35213 T**		⚠	FIAT / LANCIA
110 372	**VKDC 35214 T**		⚠	FIAT / LANCIA
110 375	**VKDC 35213 T**		⚠	FIAT / LANCIA
110 375	**VKDC 35214 T**		⚠	FIAT / LANCIA
110 376	**VKDA 40208 T**			FIAT / LANCIA
110 386	**VKDA 35702 T**	**VKDP 32103 T**	⚠	SEAT
110 386	**VKDA 37201 T**	**VKDP 32103 T**	⚠	SEAT

SACHS .../...

110 431	**VKD 35016 T**	**VKDP 33311 T**		CITROËN / FIAT / PEUGEOT
110 433	**VKDA 35602 T**	VKDP 31606 T		RENAULT
110 459	**VKDA 35500 T**	**VKDP 33500 T**		OPEL/VAUXHALL
110 460	**VKDA 35200 T**	**VKDP 33202 T**	⚠	FIAT
110 460	**VKDA 35200 T**	**VKDP 33300 T**	⚠	FIAT
110 460	**VKDC 35204 T**	**VKDP 33202 T**	⚠	FIAT
110 460	**VKDC 35204 T**	**VKDP 33300 T**	⚠	FIAT
110 462	**VKDA 35605 T**	VKDP 32602 T		RENAULT
110 463	**VKDA 35605 T**	VKDP 32602 T		RENAULT
110 469	**VKDA 37201 T**	**VKDP 31400 T**	⚠	FIAT
110 469	**VKDA 37204 T**	**VKDP 31400 T**	⚠	FIAT
110 471	**VKDC 35207 T**			LANCIA
110 476	**VKDC 35611 T**			VOLVO
110 477	**VKDA 40208 T**			FIAT / LANCIA
110 494	**VKDA 35303 T**	**VKDP 33300 T**		CITROËN / PEUGEOT
110 495	**VKDC 81104 T**		⚠	TOYOTA
110 495	**VKDC 81105 T**		⚠	TOYOTA
110 567	**VKD 35016 T**	**VKDP 33311 T**		CITROËN / FIAT / PEUGEOT
110 623	**VKDA 35303 T**	**VKDP 33300 T**		CITROËN / PEUGEOT
110 632	**VKDA 35603 T**	VKDP 32602 T		RENAULT
110 638	**VKDA 35602 T**	VKDP 31606 T		RENAULT
110 704	**VKDA 35303 T**	**VKDP 33300 T**		CITROËN / PEUGEOT
110 705	**VKDA 35303 T**	**VKDP 33300 T**		CITROËN / PEUGEOT
110 717	**VKD 35001 T**	**VKDP 32600 T**		RENAULT
110 733	**VKDC 81105 T**			TOYOTA
110 738	**VKDA 35602 T**	VKDP 31606 T		RENAULT
110 739	**VKDA 35602 T**	VKDP 31606 T		RENAULT
110 776		**VKDP 31400 T**		LANCIA
110 777		**VKDP 31400 T**		LANCIA
110 790	**VKDA 88202 T**			NISSAN
110 791	**VKDA 88202 T**			NISSAN
110 792	**VKDA 88202 T**			NISSAN
110 793	**VKDA 88202 T**			NISSAN
110 806	**VKDA 35303 T**	**VKDP 33300 T**	⚠	PEUGEOT
110 806	**VKDA 35304 T**	**VKDP 33300 T**	⚠	PEUGEOT
110 806	**VKDA 35305 T**	**VKDP 33300 T**	⚠	PEUGEOT
110 809	**VKD 35001 T**	**VKDP 32600 T**	⚠	RENAULT
110 809	**VKDA 35615 T**	**VKDP 32600 T**	⚠	RENAULT
110 809	**VKDA 35616 T**	**VKDP 32600 T**	⚠	RENAULT
110 816		**VKDP 84402 T**		MAZDA
110 817		**VKDP 84402 T**		MAZDA
110 835	**VKDC 81104 T**			TOYOTA
110 838	**VKDC 81104 T**			TOYOTA
110 856		**VKDP 33800 T**		BMW
110 870	**VKDA 37201 T**	**VKDP 33800 T**		FIAT
110 871	**VKDA 35200 T**	**VKDP 33202 T**		FIAT / LANCIA
110 873	**VKDA 35200 T**	**VKDP 33202 T**		FIAT / LANCIA
110 889	**VKDA 37202 T**	**VKDP 31400 T**		FIAT
110 894	**VKD 35001 T**	**VKDP 32600 T**	⚠	RENAULT
110 894	**VKDA 35615 T**	**VKDP 32600 T**	⚠	RENAULT
110 894	**VKDA 35616 T**	**VKDP 32600 T**	⚠	RENAULT
110 897	**VKDA 35303 T**	**VKDP 33300 T**	⚠	PEUGEOT
110 897	**VKDA 35304 T**	**VKDP 33300 T**	⚠	PEUGEOT
110 897	**VKDA 35305 T**	**VKDP 33300 T**	⚠	PEUGEOT
110 904	**VKDA 35304 T**	**VKDP 33300 T**	⚠	PEUGEOT
110 904	**VKDA 35305 T**	**VKDP 33300 T**	⚠	PEUGEOT
110 906	**VKDA 35403 T**	**VKDP 31400 T**	⚠	FORD
110 906	**VKDA 35403 T**	**VKDP 33401 T**	⚠	FORD
110 906	**VKDA 35407 T**	**VKDP 31400 T**	⚠	FORD
110 906	**VKDA 35407 T**	**VKDP 33401 T**	⚠	FORD
110 907	**VKDA 40407 T**			FORD
110 917	**VKDA 35403 T**	**VKDP 31400 T**	⚠	FORD
110 917	**VKDA 35406 T**	**VKDP 31400 T**	⚠	FORD
110 917	**VKDA 35407 T**	**VKDP 31400 T**	⚠	FORD
110 918	**VKDA 35403 T**	**VKDP 31400 T**	⚠	FORD
110 918	**VKDA 35406 T**	**VKDP 31400 T**	⚠	FORD
110 918	**VKDA 35407 T**	**VKDP 31400 T**	⚠	FORD
110 919	**VKDA 40407 T**			FORD
110 933	**VKDA 35702 T**	**VKDP 33800 T**	⚠	SEAT
110 933	**VKDA 37201 T**	**VKDP 33800 T**	⚠	SEAT
110 948		**VKDP 93401 T**		MAZDA
110 949		**VKDP 93401 T**		MAZDA
110 950		**VKDP 84402 T**		MAZDA
110 951		**VKDP 84402 T**		MAZDA
110 952		**VKDP 93402 T**		MAZDA
110 955	**VKDA 81501 T**	**VKDP 81505 T**	⚠	MITSUBISHI
110 955	**VKDA 81501 T**	**VKDP 83502 T**	⚠	MITSUBISHI
110 955	**VKDA 81502 T**	**VKDP 81505 T**	⚠	MITSUBISHI
110 955	**VKDA 81502 T**	**VKDP 83502 T**	⚠	MITSUBISHI
110 969		**VKDP 83201 T**		NISSAN
110 984		**VKDP 84401 T**		MAZDA
110 985		**VKDP 84401 T**		MAZDA
110 987	**VKDA 35602 T**	VKDP 31606 T		RENAULT
110 990		**VKDP 33800 T**		BMW
110 991	**VKDA 35403 T**	**VKDP 31400 T**	⚠	FORD
110 991	**VKDA 35409 T**	**VKDP 31400 T**	⚠	FORD
110 992	**VKDA 35403 T**	**VKDP 31400 T**	⚠	FORD
110 992	**VKDA 35409 T**	**VKDP 31400 T**	⚠	FORD
110 996		**VKDP 33800 T**	⚠	ALFA ROMEO / NISSAN
110 996		**VKDP 83201 T**	⚠	ALFA ROMEO / NISSAN
110 997		**VKDP 33800 T**	⚠	ALFA ROMEO / NISSAN
110 997		**VKDP 83201 T**	⚠	ALFA ROMEO / NISSAN
110 998		**VKDP 33800 T**		ALFA ROMEO
110 999		**VKDP 33800 T**		ALFA ROMEO
112 165		**VKDP 43101 T**		AUDI
112 235	**VKDA 40809 T**			BMW
114 043	**VKDA 40805 T**			BMW
114 053		**VKDP 43102 T**		VW
114 059	**VKDA 40113 T**	**VKDP 43101 T**		AUDI
114 126	**VKDA 40121 T**	**VKDP 43102 T**	⚠	AUDI
114 126	**VKDA 40121 T**	**VKDP 43104 T**	⚠	AUDI
114 126	**VKDA 40122 T**	**VKDP 43102 T**	⚠	AUDI
114 126	**VKDA 40122 T**	**VKDP 43104 T**	⚠	AUDI
114 133	**VKDA 40101 T**	**VKDP 43103 T**		VW
114 219	**VKDA 40610 T**			VOLVO
114 268	**VKDA 40110 T**			AUDI / SKODA / VW
114 314	**VKDA 40805 T**			BMW
114 429	**VKDA 40104 T**	**VKDP 43106 T**		AUDI / SEAT / SKODA / VW
114 444	**VKDA 40805 T**			BMW
114 473	**VKDA 40101 T**	**VKDP 43100 T**		SEAT / VW
114 502	**VKDA 40121 T**	**VKDP 43102 T**	⚠	AUDI
114 502	**VKDA 40121 T**	**VKDP 43104 T**	⚠	AUDI
114 502	**VKDA 40122 T**	**VKDP 43102 T**	⚠	AUDI
114 502	**VKDA 40122 T**	**VKDP 43104 T**	⚠	AUDI
114 547	**VKDA 40616 T**			VOLVO
114 667	**VKDA 40404 T**	**VKDP 44400 T**		FORD
114 675	**VKDA 35230 T**	**VKDP 33207 T**		ALFA ROMEO
114 679		**VKDP 44400 T**		FORD
114 745	**VKDA 40104 T**			AUDI / SKODA
114 763	**VKDA 40616 T**			VOLVO
114 764		**VKDP 33111 T**		AUDI

114 879	**VKDA 40104 T**			SEAT / VW
115 007	**VKDA 35501 T**	**VKDP 33500 T**		OPEL/VAUXHALL
115 009	**VKDA 35501 T**	**VKDP 33500 T**		OPEL/VAUXHALL
115 066	**VKDC 35801 T**	**VKDP 33800 T**		BMW
115 067	**VKDC 35801 T**	**VKDP 33800 T**		BMW
115 069	**VKDA 35810 T**	**VKDP 33801 T**	⚠	MERCEDES BENZ
115 069	**VKDA 35811 T**	**VKDP 33801 T**	⚠	MERCEDES BENZ
115 070	**VKDA 35810 T**	**VKDP 33801 T**	⚠	MERCEDES BENZ
115 070	**VKDA 35811 T**	**VKDP 33801 T**	⚠	MERCEDES BENZ
115 071	**VKDA 35810 T**	**VKDP 33801 T**		MERCEDES BENZ
115 151	**VKDA 35401 T**	**VKDP 33401 T**		FORD
115 152	**VKDA 35401 T**	**VKDP 31400 T**	⚠	FORD
115 152	**VKDA 35401 T**	**VKDP 33401 T**	⚠	FORD
115 158	**VKDA 35110 T**	**VKDP 33100 T**	⚠	SEAT / VW
115 158	**VKDA 35110 T**	**VKDP 33107 T**	⚠	SEAT / VW
115 158	**VKDA 35110 T**	**VKDP 33108 T**	⚠	SEAT / VW
115 158	**VKDC 35101 T**	**VKDP 33100 T**	⚠	SEAT / VW
115 158	**VKDC 35101 T**	**VKDP 33107 T**	⚠	SEAT / VW
115 158	**VKDC 35101 T**	**VKDP 33108 T**	⚠	SEAT / VW
115 158	**VKDC 35102 T**	**VKDP 33100 T**	⚠	SEAT / VW
115 158	**VKDC 35102 T**	**VKDP 33107 T**	⚠	SEAT / VW
115 158	**VKDC 35102 T**	**VKDP 33108 T**	⚠	SEAT / VW
115 159	**VKDA 35110 T**	**VKDP 33108 T**	⚠	SEAT / VW
115 159	**VKDA 35110 T**	**VKDP 33107 T**	⚠	SEAT / VW
115 159	**VKDA 35110 T**	**VKDP 33100 T**	⚠	SEAT / VW
115 159	**VKDC 35101 T**	**VKDP 33108 T**	⚠	SEAT / VW
115 159	**VKDC 35101 T**	**VKDP 33107 T**	⚠	SEAT / VW
115 159	**VKDC 35101 T**	**VKDP 33100 T**	⚠	SEAT / VW
115 159	**VKDC 35102 T**	**VKDP 33108 T**	⚠	SEAT / VW
115 159	**VKDC 35102 T**	**VKDP 33107 T**	⚠	SEAT / VW
115 159	**VKDC 35102 T**	**VKDP 33100 T**	⚠	SEAT / VW
115 163	**VKDA 35110 T**	**VKDP 33108 T**	⚠	VW
115 163	**VKDA 35110 T**	**VKDP 33100 T**	⚠	VW
115 163	**VKDC 35100 T**	**VKDP 33108 T**	⚠	VW
115 163	**VKDC 35100 T**	**VKDP 33100 T**	⚠	VW
115 163	**VKDC 35101 T**	**VKDP 33108 T**	⚠	VW
115 163	**VKDC 35101 T**	**VKDP 33100 T**	⚠	VW
115 164	**VKDA 35110 T**	**VKDP 33100 T**	⚠	VW
115 164	**VKDA 35110 T**	**VKDP 33108 T**	⚠	VW
115 164	**VKDC 35100 T**	**VKDP 33100 T**	⚠	VW
115 164	**VKDC 35100 T**	**VKDP 33108 T**	⚠	VW
115 164	**VKDC 35101 T**	**VKDP 33100 T**	⚠	VW
115 164	**VKDC 35101 T**	**VKDP 33108 T**	⚠	VW
115 192	**VKDC 35802 T**	**VKDP 33800 T**		BMW
115 193	**VKDC 35802 T**	**VKDP 33800 T**		BMW
115 194	**VKDC 35802 T**	**VKDP 33800 T**		BMW
115 195	**VKDC 35802 T**	**VKDP 33800 T**		BMW
115 196	**VKDC 35802 T**	**VKDP 33800 T**		BMW
115 197	**VKDC 35802 T**	**VKDP 33800 T**		BMW
115 198	**VKDC 35802 T**	**VKDP 33800 T**		BMW
115 199	**VKDC 35802 T**	**VKDP 33800 T**		BMW
115 208	**VKDC 35420 T**	**VKDP 33408 T**		SAAB
115 216	**VKDA 35400 T**	**VKDP 33405 T**	⚠	FORD / VAUXHALL
115 216	**VKDA 35400 T**	**VKDP 34500 T**	⚠	FORD / VAUXHALL
115 216	**VKDA 35416 T**	**VKDP 33405 T**	⚠	FORD / VAUXHALL
115 216	**VKDA 35416 T**	**VKDP 34500 T**	⚠	FORD / VAUXHALL
115 216	**VKDA 35508 T**	**VKDP 33405 T**	⚠	FORD / VAUXHALL
115 216	**VKDA 35508 T**	**VKDP 34500 T**	⚠	FORD / VAUXHALL
115 240	**VKDC 35802 T**	**VKDP 33800 T**		BMW
115 241	**VKDC 35802 T**	**VKDP 33800 T**		BMW
115 242	**VKDC 35802 T**	**VKDP 33800 T**		BMW
115 243	**VKDC 35802 T**	**VKDP 33800 T**		BMW
115 244	**VKDC 35802 T**	**VKDP 33800 T**		BMW
115 245	**VKDC 35802 T**	**VKDP 33800 T**		BMW
115 246	**VKDC 35802 T**	**VKDP 33800 T**		BMW
115 247	**VKDC 35802 T**	**VKDP 33800 T**		BMW
115 253	**VKDC 35420 T**	**VKDP 33408 T**		SAAB
115 259	**VKDA 35503 T**	**VKDP 33500 T**	⚠	OPEL/VAUXHALL
115 259	**VKDA 35503 T**	**VKDP 33501 T**	⚠	OPEL/VAUXHALL
115 259	**VKDA 35503 T**	**VKDP 34500 T**	⚠	OPEL/VAUXHALL
115 259	**VKDA 35515 T**	**VKDP 33500 T**	⚠	OPEL/VAUXHALL
115 259	**VKDA 35515 T**	**VKDP 33501 T**	⚠	OPEL/VAUXHALL
115 259	**VKDA 35515 T**	**VKDP 34500 T**	⚠	OPEL/VAUXHALL
115 260	**VKDA 35503 T**	**VKDP 33500 T**	⚠	OPEL/VAUXHALL
115 260	**VKDA 35503 T**	**VKDP 33501 T**	⚠	OPEL/VAUXHALL
115 260	**VKDA 35503 T**	**VKDP 34500 T**	⚠	OPEL/VAUXHALL
115 260	**VKDA 35515 T**	**VKDP 33500 T**	⚠	OPEL/VAUXHALL
115 260	**VKDA 35515 T**	**VKDP 33501 T**	⚠	OPEL/VAUXHALL
115 260	**VKDA 35515 T**	**VKDP 34500 T**	⚠	OPEL/VAUXHALL
115 322	**VKDA 35401 T**	**VKDP 33401 T**		FORD
115 323	**VKDA 35401 T**	**VKDP 33401 T**		FORD
115 349	**VKDA 35400 T**		⚠	FORD
115 349	**VKDA 35416 T**		⚠	FORD
115 368	**VKDC 35802 T**	**VKDP 33800 T**		BMW
115 369	**VKDC 35802 T**	**VKDP 33800 T**		BMW
115 370	**VKDC 35802 T**	**VKDP 33800 T**		BMW
115 371	**VKDC 35802 T**	**VKDP 33800 T**		BMW
115 372	**VKDC 35802 T**	**VKDP 33800 T**		BMW
115 373	**VKDC 35802 T**	**VKDP 33800 T**		BMW
115 374	**VKDC 35802 T**	**VKDP 33800 T**		BMW
115 375	**VKDC 35802 T**	**VKDP 33800 T**		BMW
115 430	**VKD 35001 T**	**VKDP 33605 T**		VOLVO
115 475	**VKD 35021 T**	**VKDP 33104 T**	⚠	AUDI
115 475	**VKD 35023 T**	**VKDP 33104 T**	⚠	AUDI
115 476	**VKD 35021 T**	**VKDP 33104 T**	⚠	AUDI
115 476	**VKD 35023 T**	**VKDP 33104 T**	⚠	AUDI
115 481	**VKDA 35403 T**	**VKDP 33409 T**		FORD
115 482	**VKDA 35403 T**	**VKDP 33409 T**		FORD
115 593	**VKD 35032 T**	**VKDP 33406 T**		SAAB
115 595	**VKD 35032 T**	**VKDP 33406 T**		SAAB
115 622	**VKD 35001 T**	**VKDP 33605 T**		VOLVO
115 626	**VKD 35013 T**			FORD
115 627	**VKD 35013 T**			FORD
115 648	**VKDA 35508 T**	**VKDP 34500 T**	⚠	OPEL/VAUXHALL
115 648	**VKDA 35509 T**	**VKDP 34500 T**	⚠	OPEL/VAUXHALL
115 649	**VKDA 35508 T**	**VKDP 34500 T**	⚠	OPEL/VAUXHALL
115 649	**VKDA 35509 T**	**VKDP 34500 T**	⚠	OPEL/VAUXHALL
115 652	**VKDA 35509 T**	**VKDP 34500 T**		OPEL/VAUXHALL
115 653	**VKDA 35509 T**	**VKDP 34500 T**		OPEL/VAUXHALL
115 689	**VKDC 35802 T**			BMW
115 690	**VKDC 35802 T**			BMW
115 691	**VKDC 35802 T**			BMW
115 692	**VKDC 35802 T**			BMW
115 862	**VKDA 35402 T**	**VKDP 33400 T**		FORD
115 863	**VKDA 35402 T**	**VKDP 33400 T**		FORD
115 865	**VKDA 40400 T**	**VKDP 43403 T**		FORD
115 866	**VKDA 40400 T**	**VKDP 43403 T**		FORD
115 867	**VKDA 40400 T**	**VKDP 43403 T**		FORD
115 883	**VKDA 35510 T**	**VKDP 33504 T**	⚠	OPEL/VAUXHALL
115 883	**VKDA 35511 T**	**VKDP 33504 T**	⚠	OPEL/VAUXHALL
115 886	**VKDA 40400 T**	**VKDP 43403 T**		FORD
115 887	**VKDA 40400 T**	**VKDP 43403 T**		FORD
115 888	**VKDA 40400 T**	**VKDP 43403 T**		FORD
133 000	**VKDC 35821 T**			MINI
133 001	**VKDC 35821 T**			MINI
133 003	**VKDC 35814 T**			BMW
133 004	**VKDC 35814 T**			BMW
133 014	**VKDC 35814 T**			BMW
133 015	**VKDC 35814 T**			BMW
133 019	**VKDC 35814 T**			BMW

SACHS .../...

133 020	**VKDC 35814 T**			BMW
133 022	**VKDC 35814 T**			BMW
133 023	**VKDC 35814 T**			BMW
141 055	**VKDA 40101 T**	**VKDP 43105 T**		SEAT
170 002	**VKDA 35602 T**	VKDP 31606 T		RENAULT
170 088		**VKDP 81400 T**		MAZDA
170 089		**VKDP 81400 T**		MAZDA
170 094	**VKDC 81503 T**	**VKDP 83503 T**		MITSUBISHI
170 101	**VKDC 81102 T**			TOYOTA
170 105		**VKDP 84401 T**		MAZDA
170 106		**VKDP 84401 T**		MAZDA
170 123	**VKDA 35600 T**	**VKDP 31601 T**	⚠	RENAULT
170 123	**VKDA 35601 T**	**VKDP 31601 T**	⚠	RENAULT
170 124	**VKDA 35600 T**	**VKDP 31601 T**	⚠	RENAULT
170 124	**VKDA 35601 T**	**VKDP 31601 T**	⚠	RENAULT
170 128	**VKDA 35110 T**	**VKDP 33100 T**	⚠	SEAT / VW
170 128	**VKDA 35110 T**	**VKDP 33108 T**	⚠	SEAT / VW
170 128	**VKDA 35110 T**	**VKDP 33107 T**	⚠	SEAT / VW
170 128	**VKDA 35115 T**	**VKDP 33100 T**	⚠	SEAT / VW
170 128	**VKDA 35115 T**	**VKDP 33108 T**	⚠	SEAT / VW
170 128	**VKDA 35115 T**	**VKDP 33107 T**	⚠	SEAT / VW
170 128	**VKDC 35101 T**	**VKDP 33100 T**	⚠	SEAT / VW
170 128	**VKDC 35101 T**	**VKDP 33108 T**	⚠	SEAT / VW
170 128	**VKDC 35101 T**	**VKDP 33107 T**	⚠	SEAT / VW
170 128	**VKDC 35102 T**	**VKDP 33100 T**	⚠	SEAT / VW
170 128	**VKDC 35102 T**	**VKDP 33108 T**	⚠	SEAT / VW
170 128	**VKDC 35102 T**	**VKDP 33107 T**	⚠	SEAT / VW
170 129	**VKDA 35110 T**	**VKDP 33100 T**	⚠	VW
170 129	**VKDA 35110 T**	**VKDP 33108 T**	⚠	VW
170 129	**VKDC 35100 T**	**VKDP 33100 T**	⚠	VW
170 129	**VKDC 35100 T**	**VKDP 33108 T**	⚠	VW
170 129	**VKDC 35101 T**	**VKDP 33100 T**	⚠	VW
170 129	**VKDC 35101 T**	**VKDP 33108 T**	⚠	VW
170 130	**VKDA 35110 T**	**VKDP 33100 T**	⚠	VW
170 130	**VKDA 35110 T**	**VKDP 33108 T**	⚠	VW
170 130	**VKDC 35100 T**	**VKDP 33100 T**	⚠	VW
170 130	**VKDC 35100 T**	**VKDP 33108 T**	⚠	VW
170 130	**VKDC 35101 T**	**VKDP 33100 T**	⚠	VW
170 130	**VKDC 35101 T**	**VKDP 33108 T**	⚠	VW
170 131	**VKDA 35201 T**	**VKDP 33800 T**		ALFA ROMEO
170 132	**VKDA 35201 T**	**VKDP 33800 T**		ALFA ROMEO
170 133	**VKDA 35201 T**	**VKDP 33800 T**		ALFA ROMEO
170 134	**VKDA 35201 T**	**VKDP 33800 T**		ALFA ROMEO
170 135	**VKDA 35201 T**	**VKDP 33800 T**		ALFA ROMEO
170 136	**VKDA 35201 T**	**VKDP 33800 T**		ALFA ROMEO
170 137	**VKDA 35222 T**		⚠	ALFA ROMEO
170 137	**VKDA 35223 T**		⚠	ALFA ROMEO
170 138		**VKDP 43101 T**		AUDI
170 140	**VKDC 35100 T**			AUDI
170 142	**VKDC 35801 T**	**VKDP 33800 T**		BMW
170 143	**VKDA 40805 T**			BMW
170 144	**VKDC 35207 T**			LANCIA
170 155	**VKDA 35600 T**	**VKDP 31601 T**	⚠	RENAULT
170 155	**VKDA 35601 T**	**VKDP 31601 T**	⚠	RENAULT
170 156	**VKDA 35600 T**	**VKDP 31601 T**	⚠	RENAULT
170 156	**VKDA 35601 T**	**VKDP 31601 T**	⚠	RENAULT
170 157	**VKDA 35601 T**	**VKDP 31601 T**		RENAULT
170 160	**VKDA 35110 T**	**VKDP 33100 T**	⚠	VW
170 160	**VKDA 35110 T**	**VKDP 33108 T**	⚠	VW
170 160	**VKDC 35100 T**	**VKDP 33100 T**	⚠	VW
170 160	**VKDC 35100 T**	**VKDP 33108 T**	⚠	VW
170 160	**VKDC 35101 T**	**VKDP 33100 T**	⚠	VW
170 160	**VKDC 35101 T**	**VKDP 33108 T**	⚠	VW
170 162	**VKD 35001 T**			RENAULT
170 163	**VKD 35001 T**			RENAULT
170 164	**VKDA 35306 T**	**VKDP 33300 T**	⚠	CITROËN
170 164	**VKDA 35307 T**	**VKDP 33300 T**	⚠	CITROËN
170 165	**VKDA 35306 T**	**VKDP 33300 T**	⚠	CITROËN
170 165	**VKDA 35307 T**	**VKDP 33300 T**	⚠	CITROËN
170 166	**VKDA 35306 T**	**VKDP 33300 T**	⚠	CITROËN
170 166	**VKDA 35307 T**	**VKDP 33300 T**	⚠	CITROËN
170 205	**VKDA 35403 T**	**VKDP 31400 T**	⚠	FORD
170 205	**VKDA 35403 T**	**VKDP 33401 T**	⚠	FORD
170 205	**VKDA 35407 T**	**VKDP 31400 T**	⚠	FORD
170 205	**VKDA 35407 T**	**VKDP 33401 T**	⚠	FORD
170 208	**VKDA 35319 T**	**VKDP 33308 T**		PEUGEOT
170 209	**VKDA 35319 T**	**VKDP 33308 T**		PEUGEOT
170 216	**VKDA 40101 T**	**VKDP 43100 T**		VW
170 218	**VKDA 35702 T**	**VKDP 32103 T**	⚠	SEAT
170 218	**VKDA 37201 T**	**VKDP 32103 T**	⚠	SEAT
170 221	**VKDC 81201 T**			NISSAN
170 222	**VKDC 81201 T**			NISSAN
170 227		**VKDP 93203 T**		NISSAN
170 228		**VKDP 93203 T**		NISSAN
170 229		**VKDP 93203 T**		NISSAN
170 234	**VKDA 88203 T**			NISSAN
170 235	**VKDA 88203 T**			NISSAN
170 258	**VKDA 35702 T**	**VKDP 32103 T**	⚠	SEAT
170 258	**VKDA 37201 T**	**VKDP 32103 T**	⚠	SEAT
170 259	**VKDA 35702 T**	**VKDP 32103 T**	⚠	SEAT
170 259	**VKDA 37201 T**	**VKDP 32103 T**	⚠	SEAT
170 266	**VKDA 35600 T**	**VKDP 31600 T**		RENAULT
170 268	**VKDC 35100 T**	**VKDP 32103 T**		AUDI
170 269	**VKDA 40113 T**	**VKDP 43101 T**		AUDI
170 283		**VKDP 81400 T**		MAZDA
170 284		**VKDP 81400 T**		MAZDA
170 320	**VKDC 81503 T**			MITSUBISHI
170 381	**VKDA 35110 T**	**VKDP 33108 T**	⚠	VW
170 381	**VKDA 35110 T**	**VKDP 33100 T**	⚠	VW
170 381	**VKDC 35100 T**	**VKDP 33108 T**	⚠	VW
170 381	**VKDC 35100 T**	**VKDP 33100 T**	⚠	VW
170 381	**VKDC 35101 T**	**VKDP 33108 T**	⚠	VW
170 381	**VKDC 35101 T**	**VKDP 33100 T**	⚠	VW
170 387		**VKDP 93201 T**		NISSAN
170 388	**VKDA 35200 T**	**VKDP 83201 T**		ALFA ROMEO
170 389	**VKDA 35200 T**	**VKDP 83201 T**		ALFA ROMEO
170 390	**VKDA 35200 T**	**VKDP 83201 T**		ALFA ROMEO
170 394	**VKDA 35306 T**	**VKDP 33300 T**	⚠	CITROËN / PEUGEOT
170 394	**VKDA 35307 T**	**VKDP 33300 T**	⚠	CITROËN / PEUGEOT
170 395	**VKDA 35306 T**	**VKDP 33300 T**	⚠	CITROËN / PEUGEOT
170 395	**VKDA 35307 T**	**VKDP 33300 T**	⚠	CITROËN / PEUGEOT
170 396	**VKDA 35306 T**	**VKDP 33300 T**	⚠	CITROËN
170 396	**VKDA 35307 T**	**VKDP 33300 T**	⚠	CITROËN
170 397	**VKDA 35306 T**	**VKDP 33300 T**	⚠	CITROËN
170 397	**VKDA 35307 T**	**VKDP 33300 T**	⚠	CITROËN
170 398	**VKDA 35306 T**	**VKDP 33300 T**	⚠	CITROËN
170 398	**VKDA 35307 T**	**VKDP 33300 T**	⚠	CITROËN
170 399	**VKDA 35306 T**	**VKDP 33300 T**	⚠	CITROËN / PEUGEOT
170 399	**VKDA 35307 T**	**VKDP 33300 T**	⚠	CITROËN / PEUGEOT
170 400	**VKDA 35306 T**	**VKDP 33300 T**	⚠	CITROËN / PEUGEOT
170 400	**VKDA 35307 T**	**VKDP 33300 T**	⚠	CITROËN / PEUGEOT
170 401	**VKDA 35306 T**	**VKDP 33300 T**	⚠	CITROËN
170 401	**VKDA 35307 T**	**VKDP 33300 T**	⚠	CITROËN
170 402	**VKDA 35306 T**	**VKDP 33300 T**	⚠	CITROËN
170 402	**VKDA 35307 T**	**VKDP 33300 T**	⚠	CITROËN

170 426	**VKDC 35100 T**	**VKDP 32103 T**		AUDI
170 427	**VKDA 40113 T**	**VKDP 43101 T**		AUDI
170 431	**VKDA 88205 T**			NISSAN
170 432	**VKDA 88205 T**			NISSAN
170 442	**VKD 35002 T**	**VKDP 33300 T**	⚠	CITROËN / PEUGEOT
170 442	**VKDA 35306 T**	**VKDP 33300 T**	⚠	CITROËN / PEUGEOT
170 442	**VKDA 35307 T**	**VKDP 33300 T**	⚠	CITROËN / PEUGEOT
170 443	**VKD 35002 T**	**VKDP 33300 T**	⚠	CITROËN / PEUGEOT
170 443	**VKDA 35306 T**	**VKDP 33300 T**	⚠	CITROËN / PEUGEOT
170 443	**VKDA 35307 T**	**VKDP 33300 T**	⚠	CITROËN / PEUGEOT
170 445		**VKDP 43101 T**		VW
170 473	**VKDA 40101 T**	**VKDP 43100 T**		VW
170 475		**VKDP 43102 T**		VW
170 477	**VKDA 35201 T**	**VKDP 33800 T**		ALFA ROMEO
170 478	**VKDA 35201 T**	**VKDP 33800 T**		ALFA ROMEO
170 479	**VKDA 35201 T**	**VKDP 33800 T**		ALFA ROMEO
170 480	**VKDA 35201 T**	**VKDP 33800 T**		ALFA ROMEO
170 481	**VKDA 35201 T**	**VKDP 33800 T**		ALFA ROMEO
170 482	**VKDA 35201 T**	**VKDP 33800 T**		ALFA ROMEO
170 484		**VKDP 43102 T**		VW
170 492	**VKDC 35202 T**	**VKDP 33203 T**		FIAT
170 493	**VKDC 35202 T**	**VKDP 33203 T**		FIAT
170 496	**VKDA 40610 T**			VOLVO
170 501	**VKDA 35306 T**	**VKDP 33300 T**	⚠	PEUGEOT
170 501	**VKDA 35307 T**	**VKDP 33300 T**	⚠	PEUGEOT
170 502	**VKDA 35306 T**	**VKDP 33300 T**	⚠	PEUGEOT
170 502	**VKDA 35307 T**	**VKDP 33300 T**	⚠	PEUGEOT
170 508		**VKDP 43102 T**		VW
170 576	**VKDA 35603 T**	VKDP 32602 T		RENAULT
170 599	**VKDA 35200 T**	**VKDP 83201 T**		ALFA ROMEO
170 600	**VKDA 35200 T**	**VKDP 83201 T**		ALFA ROMEO
170 602	**VKDA 35603 T**	VKDP 32602 T	⚠	RENAULT
170 602	**VKDA 35604 T**	VKDP 32602 T	⚠	RENAULT
170 603	**VKDA 35603 T**	VKDP 32602 T	⚠	RENAULT
170 603	**VKDA 35604 T**	VKDP 32602 T	⚠	RENAULT
170 604	**VKDC 35801 T**	**VKDP 33800 T**		BMW
170 607		**VKDP 33108 T**		LADA
170 609	**VKDA 40805 T**			BMW
170 611		**VKDP 43101 T**		AUDI
170 613	**VKDA 40805 T**			BMW
170 619		**VKDP 43101 T**		VW
170 620		**VKDP 43102 T**		VW
170 623	**VKDC 35802 T**	**VKDP 33800 T**		BMW
170 624	**VKDC 35802 T**	**VKDP 33800 T**		BMW
170 625	**VKDA 35200 T**	**VKDP 33202 T**		FIAT / LANCIA
170 631	**VKDA 40809 T**			BMW
170 632	**VKDA 40208 T**			FIAT / LANCIA
170 638	**VKDC 35802 T**	**VKDP 33800 T**		BMW
170 639	**VKDC 35802 T**	**VKDP 33800 T**		BMW
170 642		**VKDP 33800 T**		BMW
170 643	**VKDC 35801 T**	**VKDP 33800 T**		BMW
170 644	**VKDC 35802 T**	**VKDP 33800 T**		BMW
170 645	**VKDC 35802 T**	**VKDP 33800 T**		BMW
170 746	**VKDC 35203 T**	**VKDP 31200 T**		FIAT
170 764	**VKDC 35203 T**	**VKDP 31200 T**		FIAT
170 769	**VKDA 40809 T**			BMW
170 775	**VKDA 40805 T**			BMW
170 776	**VKDA 40805 T**			BMW
170 777	**VKDC 35802 T**	**VKDP 33800 T**		BMW
170 778	**VKDC 35802 T**	**VKDP 33800 T**		BMW
170 779	**VKDA 40407 T**			FORD
170 780	**VKDA 40101 T**	**VKDP 43105 T**		SEAT / VW
170 781	**VKDA 40101 T**	**VKDP 43105 T**		SEAT / VW
170 790	**VKD 35012 T**			AUSTIN / ROVER
170 791	**VKDA 40101 T**	**VKDP 44100 T**		VW
170 792	**VKDA 40101 T**	**VKDP 44100 T**		VW
170 793	**VKDA 40101 T**	**VKDP 44100 T**		VW
170 795	**VKDA 35110 T**	**VKDP 33100 T**	⚠	SEAT / VW
170 795	**VKDA 35110 T**	**VKDP 33107 T**	⚠	SEAT / VW
170 795	**VKDA 35110 T**	**VKDP 33108 T**	⚠	SEAT / VW
170 795	**VKDA 35115 T**	**VKDP 33100 T**	⚠	SEAT / VW
170 795	**VKDA 35115 T**	**VKDP 33107 T**	⚠	SEAT / VW
170 795	**VKDA 35115 T**	**VKDP 33108 T**	⚠	SEAT / VW
170 795	**VKDC 35101 T**	**VKDP 33100 T**	⚠	SEAT / VW
170 795	**VKDC 35101 T**	**VKDP 33107 T**	⚠	SEAT / VW
170 795	**VKDC 35101 T**	**VKDP 33108 T**	⚠	SEAT / VW
170 795	**VKDC 35102 T**	**VKDP 33100 T**	⚠	SEAT / VW
170 795	**VKDC 35102 T**	**VKDP 33107 T**	⚠	SEAT / VW
170 795	**VKDC 35102 T**	**VKDP 33108 T**	⚠	SEAT / VW
170 809	**VKDA 40218 T**		⚠	FIAT
170 809	**VKDA 40219 T**		⚠	FIAT
170 810	**VKDA 40113 T**	**VKDP 43101 T**		AUDI
170 811	**VKDA 35110 T**	**VKDP 33111 T**	⚠	AUDI / VW
170 811	**VKDA 35116 T**	**VKDP 33111 T**	⚠	AUDI / VW
170 811	**VKDA 35118 T**	**VKDP 33111 T**	⚠	AUDI / VW
170 813	**VKDA 35116 T**	**VKDP 33111 T**	⚠	AUDI / VW
170 813	**VKDA 35118 T**	**VKDP 33111 T**	⚠	AUDI / VW
170 814	**VKDA 40121 T**	**VKDP 43102 T**	⚠	AUDI
170 814	**VKDA 40121 T**	**VKDP 43104 T**	⚠	AUDI
170 814	**VKDA 40122 T**	**VKDP 43102 T**	⚠	AUDI
170 814	**VKDA 40122 T**	**VKDP 43104 T**	⚠	AUDI
170 815	**VKDA 40121 T**		⚠	AUDI
170 815	**VKDA 40122 T**		⚠	AUDI
170 816	**VKDA 40121 T**	**VKDP 43102 T**	⚠	AUDI
170 816	**VKDA 40121 T**	**VKDP 43104 T**	⚠	AUDI
170 816	**VKDA 40122 T**	**VKDP 43102 T**	⚠	AUDI
170 816	**VKDA 40122 T**	**VKDP 43104 T**	⚠	AUDI
170 822	**VKDA 40813 T**			BMW
170 823	**VKDA 40805 T**			BMW
170 824	**VKDC 35802 T**	**VKDP 33800 T**		BMW
170 825	**VKDC 35802 T**	**VKDP 33800 T**		BMW
170 828	**VKDA 40805 T**			BMW
170 829	**VKDA 40805 T**			BMW
170 858	**VKDA 35200 T**			FIAT
170 876	**VKDA 35200 T**	**VKDP 33300 T**	⚠	FIAT
170 876	**VKDC 35204 T**	**VKDP 33300 T**	⚠	FIAT
170 881		**VKDP 43101 T**		BMW
170 883		**VKDP 43101 T**		AUDI
170 885	**VKDA 40101 T**	**VKDP 43103 T**		VW
170 888	**VKDA 35110 T**	**VKDP 33100 T**	⚠	SEAT / VW
170 888	**VKDA 35110 T**	**VKDP 33107 T**	⚠	SEAT / VW
170 888	**VKDA 35110 T**	**VKDP 33800 T**	⚠	SEAT / VW
170 888	**VKDA 35111 T**	**VKDP 33100 T**	⚠	SEAT / VW
170 888	**VKDA 35111 T**	**VKDP 33107 T**	⚠	SEAT / VW
170 888	**VKDA 35111 T**	**VKDP 33800 T**	⚠	SEAT / VW
170 888	**VKDA 35115 T**	**VKDP 33100 T**	⚠	SEAT / VW
170 888	**VKDA 35115 T**	**VKDP 33107 T**	⚠	SEAT / VW
170 888	**VKDA 35115 T**	**VKDP 33800 T**	⚠	SEAT / VW
170 888	**VKDC 35102 T**	**VKDP 33100 T**	⚠	SEAT / VW
170 888	**VKDC 35102 T**	**VKDP 33107 T**	⚠	SEAT / VW
170 888	**VKDC 35102 T**	**VKDP 33800 T**	⚠	SEAT / VW
170 889	**VKDA 35110 T**	**VKDP 33800 T**	⚠	SEAT / VW
170 889	**VKDA 35110 T**	**VKDP 33100 T**	⚠	SEAT / VW
170 889	**VKDA 35110 T**	**VKDP 33107 T**	⚠	SEAT / VW
170 889	**VKDA 35111 T**	**VKDP 33800 T**	⚠	SEAT / VW
170 889	**VKDA 35111 T**	**VKDP 33100 T**	⚠	SEAT / VW
170 889	**VKDA 35111 T**	**VKDP 33107 T**	⚠	SEAT / VW
170 889	**VKDA 35115 T**	**VKDP 33800 T**	⚠	SEAT / VW
170 889	**VKDA 35115 T**	**VKDP 33100 T**	⚠	SEAT / VW
170 889	**VKDA 35115 T**	**VKDP 33107 T**	⚠	SEAT / VW

SACHS .../...

170 889	**VKDC 35102 T**	**VKDP 33800 T**	⚠	SEAT / VW
170 889	**VKDC 35102 T**	**VKDP 33100 T**	⚠	SEAT / VW
170 889	**VKDC 35102 T**	**VKDP 33107 T**	⚠	SEAT / VW
170 890	**VKDA 40101 T**			SEAT
170 905	**VKDA 35403 T**	**VKDP 31400 T**	⚠	FORD
170 905	**VKDA 35403 T**	**VKDP 33401 T**	⚠	FORD
170 905	**VKDA 35407 T**	**VKDP 31400 T**	⚠	FORD
170 905	**VKDA 35407 T**	**VKDP 33401 T**	⚠	FORD
170 906	**VKDA 35403 T**	**VKDP 31400 T**	⚠	FORD
170 906	**VKDA 35403 T**	**VKDP 33401 T**	⚠	FORD
170 906	**VKDA 35407 T**	**VKDP 31400 T**	⚠	FORD
170 906	**VKDA 35407 T**	**VKDP 33401 T**	⚠	FORD
170 907	**VKDA 35403 T**	**VKDP 31400 T**	⚠	FORD
170 907	**VKDA 35406 T**	**VKDP 31400 T**	⚠	FORD
170 907	**VKDA 35407 T**	**VKDP 31400 T**	⚠	FORD
170 908	**VKDA 35403 T**	**VKDP 31400 T**	⚠	FORD
170 908	**VKDA 35406 T**	**VKDP 31400 T**	⚠	FORD
170 908	**VKDA 35407 T**	**VKDP 31400 T**	⚠	FORD
170 909	**VKDC 35203 T**	**VKDP 31200 T**		FIAT / LANCIA
170 912		**VKDP 31400 T**		LANCIA
170 913		**VKDP 31400 T**		LANCIA
170 914	VKD 35011 T			HONDA / ROVER
170 915	VKD 35011 T			HONDA / ROVER
170 916	**VKDA 40121 T**		⚠	AUDI
170 916	**VKDA 40122 T**		⚠	AUDI
170 919	**VKDA 40101 T**	**VKDP 44100 T**		VW
170 920	VKD 35011 T			HONDA / ROVER
170 921	VKD 35011 T			HONDA / ROVER
170 930		**VKDP 43102 T**		VW
170 974	**VKD 35001 T**	**VKDP 32600 T**	⚠	RENAULT
170 974	**VKDA 35615 T**	**VKDP 32600 T**	⚠	RENAULT
170 982	**VKDA 40218 T**		⚠	FIAT
170 982	**VKDA 40219 T**		⚠	FIAT
170 985	**VKDC 81504 T**			MITSUBISHI / PROTON
170 986	**VKDC 81504 T**			MITSUBISHI / PROTON
193 008		**VKDP 43700 T**		AUSTIN
197 008	**VKD 35012 T**			AUSTIN / ROVER
199 008		**VKDP 43700 T**		AUSTIN
200 030	**VKDA 35112 T**	**VKDP 33110 T**		SKODA
200 052	**VKDA 35623 T**	**VKDP 32601 T**		RENAULT
200 053	**VKDA 35623 T**	**VKDP 32601 T**		RENAULT
200 054	**VKDA 35623 T**	**VKDP 32601 T**		RENAULT
200 055	**VKDA 35623 T**	**VKDP 32601 T**		RENAULT
200 064	**VKDA 40101 T**			VW
200 068	**VKDA 35702 T**	**VKDP 33800 T**	⚠	FIAT / SEAT
200 068	**VKDA 37201 T**	**VKDP 33800 T**	⚠	FIAT / SEAT
200 367	**VKDA 35405 T**	**VKDP 33401 T**		FORD
200 368	**VKDA 35405 T**	**VKDP 33401 T**		FORD
200 369	**VKDA 40407 T**	**VKDP 43400 T**		FORD
200 370	**VKDA 40407 T**	**VKDP 43400 T**		FORD
200 375	**VKDA 35405 T**	**VKDP 33401 T**		FORD
200 376	**VKDA 35405 T**	**VKDP 33401 T**		FORD
200 383	**VKDA 35405 T**	**VKDP 33401 T**		FORD
200 384	**VKDA 35405 T**	**VKDP 33401 T**		FORD
200 385	**VKDA 40407 T**	**VKDP 43400 T**		FORD
200 386	**VKDA 40407 T**	**VKDP 43400 T**		FORD
200 391	**VKDA 35405 T**			FORD
200 392	**VKDA 35405 T**			FORD
200 403		**VKDP 43400 T**		FORD
200 404		**VKDP 43400 T**		FORD
200 416	**VKDA 40407 T**			FORD
200 419	**VKDA 35110 T**	**VKDP 33405 T**		FORD / SEAT / VW
200 420	**VKDA 35702 T**	**VKDP 33800 T**	⚠	SEAT
200 420	**VKDA 37201 T**	**VKDP 33800 T**	⚠	SEAT
200 424	**VKDA 40407 T**			FORD
200 427	**VKDA 35300 T**	**VKDP 34303 T**	⚠	CITROËN / PEUGEOT
200 427	**VKDA 35300 T**	**VKDP 33300 T**	⚠	CITROËN / PEUGEOT
200 427	**VKDA 35302 T**	**VKDP 34303 T**	⚠	CITROËN / PEUGEOT
200 427	**VKDA 35302 T**	**VKDP 33300 T**	⚠	CITROËN / PEUGEOT
200 428	**VKDA 35300 T**	**VKDP 33300 T**	⚠	CITROËN / PEUGEOT
200 428	**VKDA 35300 T**	**VKDP 34303 T**	⚠	CITROËN / PEUGEOT
200 428	**VKDA 35302 T**	**VKDP 33300 T**	⚠	CITROËN / PEUGEOT
200 428	**VKDA 35302 T**	**VKDP 34303 T**	⚠	CITROËN / PEUGEOT
200 431	**VKDA 35317 T**	**VKDP 33301 T**		CITROËN / FIAT / LANCIA / PEUGEOT
200 439	**VKDA 35317 T**	**VKDP 33301 T**		CITROËN / FIAT / PEUGEOT
200 447	**VKD 35002 T**	**VKDP 33300 T**	⚠	CITROËN / PEUGEOT
200 447	**VKDA 35306 T**	**VKDP 33300 T**	⚠	CITROËN / PEUGEOT
200 447	**VKDA 35307 T**	**VKDP 33300 T**	⚠	CITROËN / PEUGEOT
200 448	**VKD 35002 T**	**VKDP 33300 T**	⚠	CITROËN / PEUGEOT
200 448	**VKDA 35306 T**	**VKDP 33300 T**	⚠	CITROËN / PEUGEOT
200 448	**VKDA 35307 T**	**VKDP 33300 T**	⚠	CITROËN / PEUGEOT
200 455	**VKD 35002 T**	**VKDP 33300 T**	⚠	CITROËN / PEUGEOT
200 455	**VKDA 35306 T**	**VKDP 33300 T**	⚠	CITROËN / PEUGEOT
200 455	**VKDA 35307 T**	**VKDP 33300 T**	⚠	CITROËN / PEUGEOT
200 456	**VKD 35002 T**	**VKDP 33300 T**	⚠	CITROËN / PEUGEOT
200 456	**VKDA 35306 T**	**VKDP 33300 T**	⚠	CITROËN / PEUGEOT
200 456	**VKDA 35307 T**	**VKDP 33300 T**	⚠	CITROËN / PEUGEOT
200 459	**VKDA 35306 T**	**VKDP 33300 T**	⚠	CITROËN / PEUGEOT
200 459	**VKDA 35307 T**	**VKDP 33300 T**	⚠	CITROËN / PEUGEOT
200 460	**VKDA 35306 T**	**VKDP 33300 T**	⚠	CITROËN / PEUGEOT
200 460	**VKDA 35307 T**	**VKDP 33300 T**	⚠	CITROËN / PEUGEOT
200 463	**VKDA 35306 T**	**VKDP 33300 T**	⚠	CITROËN / PEUGEOT
200 463	**VKDA 35307 T**	**VKDP 33300 T**	⚠	CITROËN / PEUGEOT
200 464	**VKDA 35306 T**	**VKDP 33300 T**	⚠	CITROËN / PEUGEOT
200 464	**VKDA 35307 T**	**VKDP 33300 T**	⚠	CITROËN / PEUGEOT
200 467	**VKD 35001 T**	**VKDP 32600 T**	⚠	RENAULT
200 467	**VKDA 35615 T**	**VKDP 32600 T**	⚠	RENAULT
200 468	**VKD 35001 T**	**VKDP 32600 T**	⚠	RENAULT
200 468	**VKDA 35615 T**	**VKDP 32600 T**	⚠	RENAULT
200 475	**VKDA 35615 T**	**VKDP 32600 T**		RENAULT

200 476	**VKDA 35615 T**	**VKDP 32600 T**		RENAULT
200 589	**VKDA 35302 T**	**VKDP 33300 T**		PEUGEOT
200 604	**VKDC 35204 T**	**VKDP 33300 T**		FIAT
200 608	**VKDC 35204 T**	**VKDP 33300 T**		FIAT
200 612	**VKDA 35200 T**	**VKDP 33300 T**	⚠	FIAT
200 612	**VKDC 35204 T**	**VKDP 33300 T**	⚠	FIAT
200 620	**VKDC 35204 T**			FIAT
200 637	**VKDA 35112 T**	**VKDP 33110 T**		SKODA
200 638	**VKDA 35112 T**	**VKDP 33110 T**		SKODA
200 644	**VKD 35020 T**			LANCIA
200 646	**VKD 35020 T**			LANCIA
200 650	**VKDC 35203 T**			LANCIA
200 674	**VKDA 35112 T**	**VKDP 33110 T**		SKODA
200 695	**VKDC 81503 T**			HYUNDAI
200 759	**VKDA 40102 T**	**VKDP 43102 T**		AUDI / VW
200 791	**VKDC 35204 T**	**VKDP 33300 T**		FIAT
200 798	**VKDA 40600 T**	**VKDP 41600 T**		RENAULT
200 800	**VKDA 35112 T**	**VKDP 33203 T**		SKODA
200 838	**VKDA 35312 T**	**VKDP 32302 T**	⚠	PEUGEOT
200 838	**VKDA 35312 T**	**VKDP 33308 T**	⚠	PEUGEOT
200 839	**VKDA 35312 T**	**VKDP 32302 T**	⚠	PEUGEOT
200 839	**VKDA 35312 T**	**VKDP 33308 T**	⚠	PEUGEOT
200 840	**VKDA 35312 T**	**VKDP 32302 T**	⚠	PEUGEOT
200 840	**VKDA 35312 T**	**VKDP 33308 T**	⚠	PEUGEOT
200 841	**VKDA 35312 T**	**VKDP 32302 T**	⚠	PEUGEOT
200 841	**VKDA 35312 T**	**VKDP 33308 T**	⚠	PEUGEOT
200 846	**VKDA 35312 T**	**VKDP 32302 T**	⚠	PEUGEOT
200 846	**VKDA 35312 T**	**VKDP 33308 T**	⚠	PEUGEOT
200 847	**VKDA 35312 T**	**VKDP 32302 T**	⚠	PEUGEOT
200 847	**VKDA 35312 T**	**VKDP 33308 T**	⚠	PEUGEOT
200 848	**VKDA 35312 T**	**VKDP 32302 T**	⚠	PEUGEOT
200 848	**VKDA 35312 T**	**VKDP 33308 T**	⚠	PEUGEOT
200 849	**VKDA 35312 T**	**VKDP 32302 T**	⚠	PEUGEOT
200 849	**VKDA 35312 T**	**VKDP 33308 T**	⚠	PEUGEOT
200 854	**VKDA 40300 T**			PEUGEOT
200 855	**VKDA 40300 T**			PEUGEOT
200 858	**VKDA 40300 T**		⚠	PEUGEOT
200 858	**VKDA 40302 T**		⚠	PEUGEOT
200 859	**VKDA 40300 T**		⚠	PEUGEOT
200 859	**VKDA 40302 T**		⚠	PEUGEOT
200 908	**VKDC 35204 T**	**VKDP 33300 T**		FIAT
200 928	**VKDA 35620 T**	**VKDP 32601 T**		RENAULT
200 951	**VKDA 35113 T**	**VKDP 33101 T**		AUDI / SEAT / SKODA / VW
200 954	**VKDA 35113 T**	**VKDP 33101 T**		AUDI / SEAT / SKODA / VW
200 981	**VKDA 88401 T**			MAZDA
200 982	**VKDA 88401 T**			MAZDA
200 985	**VKDA 88401 T**			KIA / MAZDA
200 986	**VKDA 88401 T**			KIA / MAZDA
200 998	**VKDC 81505 T**			KIA / MITSUBISHI
230 007		**VKDP 33401 T**		HYUNDAI
230 040	**VKDC 35204 T**			FIAT
230 055	**VKDA 35615 T**	**VKDP 32600 T**		RENAULT
230 057	**VKDA 35615 T**	**VKDP 32600 T**		RENAULT
230 062	**VKDA 40208 T**			FIAT / LANCIA
230 066	VKD 35011 T			ROVER
230 067	VKD 35011 T			ROVER
230 258	VKD 35011 T			ROVER
230 269	**VKDA 35607 T**	**VKDP 31601 T**		RENAULT
230 271	**VKDA 35607 T**	**VKDP 31601 T**		RENAULT
230 273	**VKDA 35607 T**	**VKDP 31601 T**		RENAULT
230 275	**VKDA 35607 T**	**VKDP 31601 T**		RENAULT
230 281	**VKDA 35600 T**	**VKDP 31601 T**	⚠	RENAULT
230 281	**VKDA 35601 T**	**VKDP 31601 T**	⚠	RENAULT
230 283	**VKDA 35600 T**	**VKDP 31601 T**	⚠	RENAULT
230 283	**VKDA 35601 T**	**VKDP 31601 T**	⚠	RENAULT
230 285	**VKDA 35601 T**	**VKDP 31601 T**		RENAULT
230 287	**VKDA 35600 T**	**VKDP 31601 T**	⚠	RENAULT
230 287	**VKDA 35601 T**	**VKDP 31601 T**	⚠	RENAULT
230 289	**VKDA 35600 T**	**VKDP 31601 T**	⚠	RENAULT
230 289	**VKDA 35601 T**	**VKDP 31601 T**	⚠	RENAULT
230 291	**VKDA 35601 T**	**VKDP 31601 T**		RENAULT
230 295	**VKDC 35613 T**	**VKDP 33601 T**		VOLVO
230 296	**VKDC 35613 T**	**VKDP 33601 T**		VOLVO
230 299	**VKDC 35613 T**	**VKDP 33601 T**		VOLVO
230 300	**VKDC 35613 T**	**VKDP 33601 T**		VOLVO
230 307	**VKDA 35113 T**	**VKDP 33101 T**		AUDI / SEAT
230 308	**VKDA 35113 T**	**VKDP 33101 T**		AUDI / SEAT
230 313	**VKDA 35110 T**	**VKDP 33100 T**	⚠	VW
230 313	**VKDA 35110 T**	**VKDP 33108 T**	⚠	VW
230 313	**VKDC 35101 T**	**VKDP 33100 T**	⚠	VW
230 313	**VKDC 35101 T**	**VKDP 33108 T**	⚠	VW
230 315	**VKDA 35110 T**	**VKDP 33100 T**	⚠	VW
230 315	**VKDA 35110 T**	**VKDP 33108 T**	⚠	VW
230 315	**VKDC 35101 T**	**VKDP 33100 T**	⚠	VW
230 315	**VKDC 35101 T**	**VKDP 33108 T**	⚠	VW
230 318	**VKDC 35613 T**	**VKDP 33601 T**		VOLVO
230 319	**VKDC 35613 T**	**VKDP 33601 T**		VOLVO
230 335	**VKDC 35232 T**			FIAT
230 343	**VKDA 35308 T**	**VKDP 32301 T**	⚠	PEUGEOT
230 343	**VKDA 35309 T**	**VKDP 32301 T**	⚠	PEUGEOT
230 344	**VKDA 35308 T**	**VKDP 32301 T**	⚠	PEUGEOT
230 344	**VKDA 35309 T**	**VKDP 32301 T**	⚠	PEUGEOT
230 347	**VKDA 35308 T**	**VKDP 33303 T**	⚠	PEUGEOT
230 347	**VKDA 35308 T**	**VKDP 33306 T**	⚠	PEUGEOT
230 347	**VKDA 35308 T**	**VKDP 32301 T**	⚠	PEUGEOT
230 347	**VKDA 35309 T**	**VKDP 33303 T**	⚠	PEUGEOT
230 347	**VKDA 35309 T**	**VKDP 33306 T**	⚠	PEUGEOT
230 347	**VKDA 35309 T**	**VKDP 32301 T**	⚠	PEUGEOT
230 348	**VKDA 35308 T**	**VKDP 32301 T**	⚠	PEUGEOT
230 348	**VKDA 35308 T**	**VKDP 33303 T**	⚠	PEUGEOT
230 348	**VKDA 35308 T**	**VKDP 33306 T**	⚠	PEUGEOT
230 348	**VKDA 35309 T**	**VKDP 32301 T**	⚠	PEUGEOT
230 348	**VKDA 35309 T**	**VKDP 33303 T**	⚠	PEUGEOT
230 348	**VKDA 35309 T**	**VKDP 33306 T**	⚠	PEUGEOT
230 349	**VKDA 35308 T**	**VKDP 32301 T**	⚠	PEUGEOT
230 349	**VKDA 35308 T**	**VKDP 33303 T**	⚠	PEUGEOT
230 349	**VKDA 35308 T**	**VKDP 33306 T**	⚠	PEUGEOT
230 349	**VKDA 35309 T**	**VKDP 32301 T**	⚠	PEUGEOT
230 349	**VKDA 35309 T**	**VKDP 33303 T**	⚠	PEUGEOT
230 349	**VKDA 35309 T**	**VKDP 33306 T**	⚠	PEUGEOT
230 350	**VKDA 35308 T**	**VKDP 33306 T**	⚠	PEUGEOT
230 350	**VKDA 35308 T**	**VKDP 33303 T**	⚠	PEUGEOT
230 350	**VKDA 35308 T**	**VKDP 32301 T**	⚠	PEUGEOT
230 350	**VKDA 35309 T**	**VKDP 33306 T**	⚠	PEUGEOT
230 350	**VKDA 35309 T**	**VKDP 33303 T**	⚠	PEUGEOT
230 350	**VKDA 35309 T**	**VKDP 32301 T**	⚠	PEUGEOT
230 355	**VKDA 35308 T**	**VKDP 33306 T**	⚠	PEUGEOT
230 355	**VKDA 35308 T**	**VKDP 33303 T**	⚠	PEUGEOT
230 356	**VKDA 35308 T**	**VKDP 33303 T**	⚠	PEUGEOT
230 356	**VKDA 35308 T**	**VKDP 33306 T**	⚠	PEUGEOT
230 357	**VKDA 35308 T**	**VKDP 33303 T**	⚠	PEUGEOT
230 357	**VKDA 35308 T**	**VKDP 33306 T**	⚠	PEUGEOT
230 358	**VKDA 35308 T**	**VKDP 33303 T**	⚠	PEUGEOT
230 358	**VKDA 35308 T**	**VKDP 33306 T**	⚠	PEUGEOT
230 379	**VKDA 35607 T**	**VKDP 31601 T**		RENAULT
230 380	**VKDA 35607 T**	**VKDP 31601 T**		RENAULT
230 381	**VKDA 35607 T**	**VKDP 31601 T**		RENAULT
230 382	**VKDA 35607 T**	**VKDP 31601 T**		RENAULT
230 389	**VKDA 35602 T**	VKDP 31606 T		RENAULT
230 390	**VKDA 35602 T**	VKDP 31606 T		RENAULT
230 395	**VKDA 35319 T**	**VKDP 33308 T**		PEUGEOT
230 396	**VKDA 35319 T**	**VKDP 33308 T**		PEUGEOT
230 397	**VKDA 35319 T**	**VKDP 33308 T**		PEUGEOT
230 398	**VKDA 35319 T**	**VKDP 33308 T**		PEUGEOT

SACHS .../...

230 507	**VKDC 81112 T**	**VKDP 83106 T**		TOYOTA
230 508	**VKDC 81112 T**	**VKDP 83106 T**		TOYOTA
230 511		**VKDP 83201 T**		TOYOTA
230 512		**VKDP 83201 T**		TOYOTA
230 533	**VKDA 35306 T**	**VKDP 33300 T**		CITROËN
230 534	**VKDA 35306 T**	**VKDP 33300 T**		CITROËN
230 535	**VKDA 35306 T**	**VKDP 33300 T**		CITROËN
230 536	**VKDA 35306 T**	**VKDP 33300 T**		CITROËN
230 545	**VKDC 35202 T**	**VKDP 33203 T**		FIAT
230 549	**VKDC 35202 T**	**VKDP 33203 T**		FIAT
230 574	**VKDA 35508 T**	**VKDP 34500 T**		OPEL/VAUXHALL
230 575	**VKDA 35508 T**	**VKDP 34500 T**		OPEL/VAUXHALL
230 576	**VKDA 35508 T**	**VKDP 34500 T**		OPEL/VAUXHALL
230 577	**VKDA 35508 T**	**VKDP 34500 T**		OPEL/VAUXHALL
230 578	**VKDA 35508 T**	**VKDP 34500 T**		OPEL/VAUXHALL
230 579	**VKDA 35508 T**	**VKDP 34500 T**		OPEL/VAUXHALL
230 696	**VKDC 35204 T**			FIAT
230 700	**VKDC 35204 T**			FIAT
230 709	**VKDA 35417 T**	**VKDP 33402 T**	⚠	FORD
230 709	**VKDA 35425 T**	**VKDP 33402 T**	⚠	FORD
230 710	**VKDA 35417 T**	**VKDP 33402 T**	⚠	FORD
230 710	**VKDA 35425 T**	**VKDP 33402 T**	⚠	FORD
230 711	**VKDA 35417 T**	**VKDP 33402 T**	⚠	FORD
230 711	**VKDA 35425 T**	**VKDP 33402 T**	⚠	FORD
230 712	**VKDA 35417 T**	**VKDP 33402 T**	⚠	FORD
230 712	**VKDA 35425 T**	**VKDP 33402 T**	⚠	FORD
230 713	**VKDA 40404 T**	**VKDP 44400 T**		FORD
230 714	**VKDA 40404 T**	**VKDP 44400 T**		FORD
230 721	**VKDA 40401 T**	**VKDP 43400 T**		FORD
230 752	**VKDA 35501 T**	**VKDP 33500 T**		OPEL/VAUXHALL
230 777	**VKDA 35415 T**			FORD
230 785		**VKDP 93203 T**		NISSAN
230 786		**VKDP 93203 T**		NISSAN
230 965	**VKDA 35423 T**	***VKDP 33410 T***		FORD
280 040		**VKDP 81400 T**		MAZDA
280 041		**VKDP 81400 T**		MAZDA
280 343		**VKDP 81400 T**		MAZDA
280 345		**VKDP 93401 T**		MAZDA
280 355		**VKDP 44400 T**		FORD
280 357		**VKDP 44400 T**		FORD
280 359	**VKDA 35508 T**	**VKDP 34500 T**		OPEL/VAUXHALL
280 360	**VKDA 35508 T**	**VKDP 34500 T**		OPEL/VAUXHALL
280 361	**VKDA 35508 T**	**VKDP 34500 T**		OPEL/VAUXHALL
280 362	**VKDA 35508 T**	**VKDP 34500 T**		OPEL/VAUXHALL
280 371	**VKDA 35220 T**		⚠	FIAT
280 371	**VKDA 35221 T**		⚠	FIAT
280 372	**VKDA 35220 T**		⚠	FIAT
280 372	**VKDA 35221 T**		⚠	FIAT
280 375	**VKDA 35220 T**		⚠	FIAT
280 375	**VKDA 35221 T**		⚠	FIAT
280 375	**VKDA 35225 T**		⚠	FIAT
280 376	**VKDA 35220 T**		⚠	FIAT
280 376	**VKDA 35221 T**		⚠	FIAT
280 376	**VKDA 35225 T**		⚠	FIAT
280 392	**VKDA 88203 T**			NISSAN
280 393	**VKDA 88203 T**			NISSAN
280 437	**VKDA 35115 T**	**VKDP 33100 T**		SEAT
280 438	**VKDA 35115 T**	**VKDP 33100 T**		SEAT
280 485		**VKDP 93401 T**		MAZDA
280 535	**VKDA 35118 T**	**VKDP 33111 T**		AUDI
280 537	**VKDA 35118 T**	**VKDP 33111 T**		AUDI
280 545	**VKDA 35521 T**			SAAB
280 547	**VKDA 35521 T**			SAAB
280 556	**VKDA 35308 T**	**VKDP 33303 T**	⚠	PEUGEOT
280 556	**VKDA 35308 T**	**VKDP 33306 T**	⚠	PEUGEOT
280 556	**VKDA 35308 T**	**VKDP 32301 T**	⚠	PEUGEOT
280 556	**VKDA 35309 T**	**VKDP 33303 T**	⚠	PEUGEOT
280 556	**VKDA 35309 T**	**VKDP 33306 T**	⚠	PEUGEOT
280 556	**VKDA 35309 T**	**VKDP 32301 T**	⚠	PEUGEOT
280 557	**VKDA 35308 T**	**VKDP 32301 T**	⚠	PEUGEOT
280 557	**VKDA 35308 T**	**VKDP 33303 T**	⚠	PEUGEOT
280 557	**VKDA 35308 T**	**VKDP 33306 T**	⚠	PEUGEOT
280 557	**VKDA 35309 T**	**VKDP 32301 T**	⚠	PEUGEOT
280 557	**VKDA 35309 T**	**VKDP 33303 T**	⚠	PEUGEOT
280 557	**VKDA 35309 T**	**VKDP 33306 T**	⚠	PEUGEOT
280 560	**VKDA 40121 T**	**VKDP 43102 T**	⚠	AUDI
280 560	**VKDA 40121 T**	**VKDP 43104 T**	⚠	AUDI
280 560	**VKDA 40122 T**	**VKDP 43102 T**	⚠	AUDI
280 560	**VKDA 40122 T**	**VKDP 43104 T**	⚠	AUDI
280 561	**VKDA 40121 T**	**VKDP 43102 T**	⚠	AUDI
280 561	**VKDA 40121 T**	**VKDP 43104 T**	⚠	AUDI
280 561	**VKDA 40122 T**	**VKDP 43102 T**	⚠	AUDI
280 561	**VKDA 40122 T**	**VKDP 43104 T**	⚠	AUDI
280 562	**VKDA 40121 T**		⚠	AUDI
280 562	**VKDA 40122 T**		⚠	AUDI
280 563	**VKDA 40121 T**		⚠	AUDI
280 563	**VKDA 40122 T**		⚠	AUDI
280 564	**VKDA 40104 T**			SKODA / VW
280 565	**VKDA 40104 T**			VW
280 567	**VKDA 35110 T**	**VKDP 33111 T**	⚠	AUDI / VW
280 567	**VKDA 35116 T**	**VKDP 33111 T**	⚠	AUDI / VW
280 567	**VKDA 35118 T**	**VKDP 33111 T**	⚠	AUDI / VW
280 591		**VKDP 33500 T**		DAEWOO
280 697		**VKDP 33107 T**		MAZDA
280 698		**VKDP 33107 T**		MAZDA
280 701		**VKDP 43105 T**		MAZDA
280 906	**VKDA 88203 T**		⚠	NISSAN
280 906	**VKDA 88204 T**		⚠	NISSAN
280 907	**VKDA 88203 T**		⚠	NISSAN
280 907	**VKDA 88204 T**		⚠	NISSAN
280 951	**VKDA 88203 T**			NISSAN
280 952	**VKDA 88203 T**			NISSAN
280 975	**VKDA 35313 T**	**VKDP 33311 T**		CITROËN / FIAT / PEUGEOT
280 977	**VKDA 35313 T**	**VKDP 33311 T**		CITROËN / FIAT / PEUGEOT
290 001	**VKDA 35600 T**	**VKDP 31600 T**		RENAULT
290 002	**VKDA 35600 T**	**VKDP 31600 T**		RENAULT
290 024	**VKDC 35232 T**			FIAT
290 026	**VKDC 35232 T**			FIAT
290 028	**VKDC 35232 T**			FIAT
290 038	**VKDA 35418 T**	**VKDP 33411 T**		FORD
290 039	**VKDA 35418 T**	**VKDP 33411 T**		FORD
290 044	**VKDA 35230 T**	**VKDP 33207 T**		ALFA ROMEO
290 054	**VKDA 35200 T**	**VKDP 33300 T**	⚠	FIAT
290 054	**VKDA 35200 T**	**VKDP 33202 T**	⚠	FIAT
290 054	**VKDC 35204 T**	**VKDP 33300 T**	⚠	FIAT
290 054	**VKDC 35204 T**	**VKDP 33202 T**	⚠	FIAT
290 074	**VKDC 81103 T**			TOYOTA
290 075	**VKDC 81103 T**			TOYOTA
290 082	**VKDC 81104 T**			TOYOTA
290 083	**VKDC 81104 T**			TOYOTA
290 186	**VKDA 35116 T**	**VKDP 33111 T**	⚠	AUDI / SKODA / VW
290 186	**VKDA 35118 T**	**VKDP 33111 T**	⚠	AUDI / SKODA / VW
290 187	**VKDA 40110 T**			AUDI / SKODA / VW
290 206	**VKDA 35623 T**	**VKDP 32601 T**		RENAULT
290 236	**VKDC 35821 T**			MINI
290 237	**VKDC 35821 T**			MINI
290 260	**VKDC 35232 T**			FIAT
290 275	**VKDA 40809 T**			BMW

290 381	**VKDA 35508 T**			OPEL
290 382	**VKDA 35508 T**			OPEL
290 383	**VKDA 35508 T**			OPEL
290 384	**VKDA 35508 T**			OPEL
290 385	**VKDA 35508 T**			OPEL
290 386	**VKDA 35508 T**			OPEL
290 505	**VKDA 37202 T**	**VKDP 31400 T**		FIAT
290 507	**VKDA 88401 T**			KIA / MAZDA
290 508	**VKDA 88401 T**			KIA / MAZDA
290 685	**VKDA 35407 T**	**VKDP 33401 T**		FORD / MAZDA
290 686	**VKDA 35407 T**	**VKDP 33401 T**		FORD / MAZDA
290 687	**VKDA 35407 T**	**VKDP 33401 T**		FORD / MAZDA
290 688	**VKDA 35407 T**	**VKDP 33401 T**		FORD / MAZDA
290 689	**VKDA 40401 T**	**VKDP 43400 T**		FORD / MAZDA
290 690	**VKDA 40401 T**	**VKDP 43400 T**		FORD / MAZDA
290 691	**VKDA 40401 T**	**VKDP 43400 T**		FORD
290 692	**VKDA 40401 T**	**VKDP 43400 T**		FORD
290 701	**VKDA 35236 T**			FIAT
290 705	**VKDA 35236 T**			FIAT
290 707	**VKDA 35319 T**			PEUGEOT
290 708	**VKDA 35319 T**			PEUGEOT
290 709	**VKDA 35319 T**			PEUGEOT
290 710	**VKDA 35319 T**			PEUGEOT
290 719	**VKDA 35407 T**			FORD
290 721	**VKDA 35407 T**			FORD
290 723	**VKDA 40401 T**			FORD
290 724	**VKDA 40401 T**			FORD
290 727	**VKDA 40401 T**			FORD
290 728	**VKDA 40401 T**			FORD
290 735	**VKDA 35619 T**	**VKDP 31602 T**		RENAULT
290 736	**VKDA 35619 T**	**VKDP 31602 T**		RENAULT
290 778	**VKDC 35801 T**	**VKDP 33800 T**		BMW
290 779	**VKDA 40809 T**			BMW
290 780	**VKDC 81504 T**			MITSUBISHI / PROTON
290 781	**VKDC 81504 T**			MITSUBISHI / PROTON
290 784		**VKDP 33500 T**		DAEWOO
290 808	**VKDA 35112 T**	**VKDP 33110 T**		SKODA
290 809	**VKDA 35112 T**	**VKDP 33110 T**		SKODA
290 853	**VKDC 35202 T**			FIAT
290 854	**VKDC 35202 T**			FIAT
290 857	**VKDA 35407 T**			FORD
290 858	**VKDA 40401 T**	**VKDP 43400 T**		FORD
290 873	**VKDA 40300 T**			PEUGEOT
290 874	**VKDA 40300 T**			PEUGEOT
290 887	**VKDA 40104 T**			SEAT
290 888	**VKDA 40104 T**			SEAT
290 929	**VKDA 40101 T**	**VKDP 43103 T**		VW
290 947	**VKDC 35814 T**	**VKDP 33800 T**		BMW
290 948	**VKDC 35814 T**	**VKDP 33800 T**		BMW
290 949	**VKDC 35814 T**	**VKDP 33800 T**		BMW
290 950	**VKDC 35814 T**	**VKDP 33800 T**		BMW
290 951	**VKDA 40805 T**			BMW
290 952	**VKDA 35110 T**	**VKDP 33100 T**	⚠	SEAT / VW
290 952	**VKDA 35110 T**	**VKDP 33107 T**	⚠	SEAT / VW
290 952	**VKDA 35110 T**	**VKDP 33108 T**	⚠	SEAT / VW
290 952	**VKDA 35115 T**	**VKDP 33100 T**	⚠	SEAT / VW
290 952	**VKDA 35115 T**	**VKDP 33107 T**	⚠	SEAT / VW
290 952	**VKDA 35115 T**	**VKDP 33108 T**	⚠	SEAT / VW
290 952	**VKDC 35101 T**	**VKDP 33100 T**	⚠	SEAT / VW
290 952	**VKDC 35101 T**	**VKDP 33107 T**	⚠	SEAT / VW
290 952	**VKDC 35101 T**	**VKDP 33108 T**	⚠	SEAT / VW
290 952	**VKDC 35102 T**	**VKDP 33100 T**	⚠	SEAT / VW
290 952	**VKDC 35102 T**	**VKDP 33107 T**	⚠	SEAT / VW
290 952	**VKDC 35102 T**	**VKDP 33108 T**	⚠	SEAT / VW
290 959	**VKDA 35315 T**	**VKDP 33304 T**		PEUGEOT
290 960	**VKDA 35315 T**	**VKDP 33304 T**		PEUGEOT
290 961	**VKDA 35315 T**	**VKDP 33304 T**		PEUGEOT
290 962	**VKDA 35315 T**	**VKDP 33304 T**		PEUGEOT
290 963	**VKDA 40304 T**			PEUGEOT
290 964	**VKDA 40304 T**			PEUGEOT
290 965	**VKDA 40304 T**			PEUGEOT
290 966	**VKDA 40304 T**			PEUGEOT
290 984	**VKDA 40805 T**			BMW
290 985	**VKDC 35814 T**	**VKDP 33800 T**		BMW
290 986	**VKDC 35814 T**	**VKDP 33800 T**		BMW
300 032	**VKDA 35115 T**	**VKDP 33800 T**		AUDI / SEAT / SKODA / VW
300 034	**VKDA 35115 T**	**VKDP 33800 T**		AUDI / SEAT / SKODA / VW
300 036	**VKDA 35115 T**	**VKDP 33800 T**		SEAT / VW
300 074	**VKDA 40616 T**			VOLVO
300 075	**VKDA 40616 T**			VOLVO
300 138		**VKDP 33802 T**		MERCEDES BENZ
300 139		**VKDP 33802 T**		MERCEDES BENZ
310 016	**VKDA 35813 T**			MERCEDES BENZ
310 054	**VKDA 35625 T**	**VKDP 31603 T**		RENAULT
310 056	**VKDA 35625 T**	**VKDP 31603 T**		RENAULT
310 071	**VKDC 35613 T**	**VKDP 33601 T**		VOLVO
310 072	**VKDC 35613 T**	**VKDP 33601 T**		VOLVO
310 073	**VKDC 35613 T**	**VKDP 33601 T**		VOLVO
310 074	**VKDC 35613 T**	**VKDP 33601 T**		VOLVO
310 075	**VKDC 35613 T**	**VKDP 33601 T**		VOLVO
310 076	**VKDC 35613 T**	**VKDP 33601 T**		VOLVO
310 083	**VKDA 40401 T**			FORD
310 085	**VKDA 40401 T**			FORD
310 089	**VKDA 35316 T**			CITROËN
310 090	**VKDA 35316 T**			CITROËN
310 091	**VKDA 35316 T**			CITROËN
310 092	**VKDA 35316 T**			CITROËN
310 273	**VKDC 35814 T**			BMW
310 274	**VKDC 35814 T**			BMW
310 379	**VKDC 35814 T**			BMW
310 380	**VKDC 35814 T**			BMW
310 464	**VKDC 35814 T**			BMW
310 465	**VKDC 35814 T**			BMW
310 466	**VKDC 35814 T**			BMW
310 467	**VKDC 35814 T**			BMW
310 480	**VKDC 35814 T**			BMW
310 481	**VKDC 35814 T**			BMW
310 495	**VKDC 35814 T**			BMW
310 496	**VKDC 35814 T**			BMW
310 714	**VKDA 35122 T**			VW
310 762	**VKDA 35317 T**			FIAT / LANCIA
310 763	**VKDA 35317 T**			FIAT / LANCIA
310 766	**VKDA 35317 T**	**VKDP 33301 T**		CITROËN / FIAT / LANCIA / PEUGEOT
310 767	**VKDA 35317 T**	**VKDP 33301 T**		CITROËN / FIAT / PEUGEOT
310 838	**VKDC 35613 T**	**VKDP 33601 T**		VOLVO
310 839	**VKDC 35613 T**	**VKDP 33601 T**		VOLVO
310 840	**VKDC 35613 T**	**VKDP 33601 T**		VOLVO
310 841	**VKDC 35613 T**	**VKDP 33601 T**		VOLVO
310 982	**VKDC 35814 T**			BMW
310 983	**VKDC 35814 T**			BMW
310 985	**VKDC 35814 T**			BMW
310 986	**VKDC 35814 T**			BMW
444 005	**VKDA 40101 T**	**VKDP 44100 T**		VW
444 006	**VKDA 40110 T**			AUDI / VW
444 009	**VKDA 40121 T**	**VKDP 43102 T**	⚠	AUDI
444 009	**VKDA 40121 T**	**VKDP 43104 T**	⚠	AUDI
444 009	**VKDA 40122 T**	**VKDP 43102 T**	⚠	AUDI
444 009	**VKDA 40122 T**	**VKDP 43104 T**	⚠	AUDI
444 010	**VKDA 40121 T**	**VKDP 43102 T**	⚠	AUDI

SACHS .../...

444 010	**VKDA 40121 T**	**VKDP 43104 T**	⚠	AUDI
444 010	**VKDA 40122 T**	**VKDP 43102 T**	⚠	AUDI
444 010	**VKDA 40122 T**	**VKDP 43104 T**	⚠	AUDI
444 049	**VKDA 40104 T**	**VKDP 43106 T**		AUDI / SEAT / SKODA / VW
553 040	**VKDA 35402 T**	**VKDP 33400 T**		FORD
553 042	**VKDA 35402 T**	**VKDP 33400 T**		FORD
553 044	**VKDA 40400 T**	**VKDP 43403 T**		FORD
553 046	**VKDA 40400 T**	**VKDP 43403 T**		FORD
553 058	**VKDC 35634 T**	**VKDP 33500 T**		VOLVO
553 173	**VKDA 35508 T**	**VKDP 34500 T**	⚠	OPEL/VAUXHALL
553 173	**VKDA 35509 T**	**VKDP 34500 T**	⚠	OPEL/VAUXHALL
553 174	**VKDA 35508 T**	**VKDP 34500 T**	⚠	OPEL/VAUXHALL
553 174	**VKDA 35509 T**	**VKDP 34500 T**	⚠	OPEL/VAUXHALL
553 175	**VKDA 35509 T**	**VKDP 34500 T**		OPEL/VAUXHALL
553 176	**VKDA 35509 T**	**VKDP 34500 T**		OPEL/VAUXHALL
553 325	**VKDC 35634 T**	**VKDP 33500 T**		VOLVO
553 374	**VKDA 40407 T**			FORD
553 475	**VKDA 35811 T**			MERCEDES BENZ
553 667	**VKD 35005 T**			MERCEDES BENZ
553 669	**VKD 35005 T**			MERCEDES BENZ
553 670	**VKDA 35520 T**	**VKDP 33403 T**		SAAB
553 672	**VKDA 35520 T**	**VKDP 33403 T**		SAAB
553 674	**VKDA 35520 T**	**VKDP 33403 T**		SAAB
553 680	**VKDA 35521 T**			SAAB
553 682	**VKDA 35521 T**			SAAB
553 871		**VKDP 33802 T**		MERCEDES BENZ
554 046	**VKDC 35627 T**		⚠	VOLVO
554 046	**VKDC 35634 T**		⚠	VOLVO
554 048	**VKDC 35627 T**		⚠	VOLVO
554 048	**VKDC 35634 T**		⚠	VOLVO
554 813	**VKDA 35402 T**			FORD
554 815	**VKDA 40400 T**			FORD
556 212	**VKDA 40805 T**			BMW
556 214	**VKDA 40805 T**			BMW
556 253	**VKDA 40101 T**	**VKDP 43105 T**		SEAT / VW
556 268	**VKDA 40104 T**	**VKDP 43106 T**		SEAT / SKODA / VW
556 269	**VKDA 40104 T**	**VKDP 43106 T**		SEAT / SKODA / VW
556 271	**VKDA 40104 T**	**VKDP 43106 T**		SEAT / SKODA / VW
556 273	**VKDA 40104 T**	**VKDP 43106 T**		SKODA / VW
556 277	**VKDA 40110 T**			AUDI / SKODA / VW
556 279	**VKDA 40110 T**			AUDI / VW
556 281	**VKDA 40109 T**			AUDI / VW
556 287	**VKDA 40110 T**			AUDI / SKODA / VW
556 301	**VKDA 40104 T**	**VKDP 43106 T**		AUDI
556 303	**VKDA 40104 T**	**VKDP 43106 T**		AUDI
556 305	**VKDA 40104 T**	**VKDP 43106 T**		AUDI
556 307	**VKDA 40204 T**			ALFA ROMEO
556 309	**VKDA 40204 T**			ALFA ROMEO
556 311	**VKDA 35230 T**	**VKDP 33207 T**		ALFA ROMEO
556 313	**VKDA 35230 T**	**VKDP 33207 T**		ALFA ROMEO
556 341		**VKDP 43100 T**		SKODA
556 343	**VKDA 35200 T**			LANCIA
556 345	**VKDA 35200 T**			LANCIA
556 832	**VKDC 35814 T**		⚠	BMW
556 832	**VKDC 35815 T**		⚠	BMW
556 834	**VKDC 35814 T**		⚠	BMW
556 834	**VKDC 35815 T**		⚠	BMW
556 839	**VKDA 35230 T**			ALFA ROMEO
556 843	**VKD 35018 T**			LANCIA
556 844	**VKD 35018 T**			LANCIA
556 855	**VKDC 35814 T**	**VKDP 33800 T**		BMW
556 856	**VKDC 35814 T**	**VKDP 33800 T**		BMW
556 857	**VKDC 35814 T**	**VKDP 33800 T**		BMW
556 858	**VKDC 35814 T**	**VKDP 33800 T**		BMW
556 867	**VKDC 35814 T**	**VKDP 33800 T**		BMW
556 868	**VKDC 35814 T**	**VKDP 33800 T**		BMW
556 869	**VKDC 35814 T**	**VKDP 33800 T**		BMW
556 870	**VKDC 35814 T**	**VKDP 33800 T**		BMW
556 873	**VKDC 35814 T**	**VKDP 33800 T**		BMW
556 874	**VKDC 35814 T**	**VKDP 33800 T**		BMW
556 878	**VKDA 40805 T**			BMW
556 882	**VKDA 40805 T**			BMW
556 884	**VKDA 40805 T**			BMW
556 990	**VKDA 35200 T**			FIAT
557 162	**VKDA 35200 T**	**VKDP 83201 T**		ALFA ROMEO
557 282	**VKDA 40805 T**			BMW
557 833	**VKDA 35116 T**	**VKDP 33111 T**	⚠	AUDI / SKODA / VW
557 833	**VKDA 35118 T**	**VKDP 33111 T**	⚠	AUDI / SKODA / VW
557 835	**VKDA 35116 T**	**VKDP 33111 T**	⚠	AUDI / SKODA / VW
557 835	**VKDA 35118 T**	**VKDP 33111 T**	⚠	AUDI / SKODA / VW
557 837	**VKDA 35116 T**	**VKDP 33111 T**	⚠	AUDI / SKODA / VW
557 837	**VKDA 35118 T**	**VKDP 33111 T**	⚠	AUDI / SKODA / VW
557 839	**VKDA 35116 T**	**VKDP 33111 T**	⚠	AUDI / SKODA / VW
557 839	**VKDA 35118 T**	**VKDP 33111 T**	⚠	AUDI / SKODA / VW
558 297		**VKDP 33111 T**		AUDI
558 299		**VKDP 33111 T**		AUDI
558 301		**VKDP 33111 T**		AUDI
558 303		**VKDP 33111 T**		AUDI
716 134		**VKDP 33800 T**		BMW
716 141		**VKDP 33800 T**		BMW
716 144	**VKDC 35801 T**	**VKDP 33800 T**		BMW
995 024	**VKDA 35501 T**	**VKDP 33500 T**		OPEL/VAUXHALL
995 052	**VKDA 35501 T**	**VKDP 33500 T**		OPEL/VAUXHALL
995 062	**VKDC 35802 T**	**VKDP 33800 T**		BMW
995 063	**VKDC 35802 T**	**VKDP 33800 T**		BMW
995 064	**VKDC 35802 T**	**VKDP 33800 T**		BMW
995 065	**VKDC 35802 T**	**VKDP 33800 T**		BMW
995 086	**VKDA 35503 T**	**VKDP 33500 T**	⚠	OPEL/VAUXHALL
995 086	**VKDA 35503 T**	**VKDP 33501 T**	⚠	OPEL/VAUXHALL
995 086	**VKDA 35515 T**	**VKDP 33500 T**	⚠	OPEL/VAUXHALL
995 086	**VKDA 35515 T**	**VKDP 33501 T**	⚠	OPEL/VAUXHALL
995 099	**VKDC 35802 T**	**VKDP 33800 T**		BMW
995 100	**VKDC 35802 T**	**VKDP 33800 T**		BMW
995 111	**VKDC 35802 T**	**VKDP 33800 T**		BMW
995 112	**VKDC 35802 T**	**VKDP 33800 T**		BMW
995 116	**VKD 35021 T**	**VKDP 33104 T**	⚠	AUDI
995 116	**VKD 35023 T**	**VKDP 33104 T**	⚠	AUDI
995 118	**VKDA 35615 T**	**VKDP 32600 T**	⚠	RENAULT
995 118	**VKDA 35616 T**	**VKDP 32600 T**	⚠	RENAULT
995 119	**VKDA 35110 T**	**VKDP 33100 T**	⚠	VW
995 119	**VKDA 35110 T**	**VKDP 33108 T**	⚠	VW
995 119	**VKDC 35101 T**	**VKDP 33100 T**	⚠	VW
995 119	**VKDC 35101 T**	**VKDP 33108 T**	⚠	VW
995 137	**VKDA 35402 T**	**VKDP 33400 T**		FORD
995 138	**VKDA 40400 T**	**VKDP 43403 T**		FORD
995 147	**VKDC 35802 T**	**VKDP 33800 T**		BMW
995 148	**VKDC 35802 T**	**VKDP 33800 T**		BMW
995 150		**VKDP 93203 T**		NISSAN
995 151		**VKDP 93203 T**		NISSAN

995 170	**VKDC 35814 T**		⚠	BMW
995 170	**VKDC 35815 T**		⚠	BMW
995 197	**VKDC 35634 T**	**VKDP 33500 T**		VOLVO
995 198	**VKDC 35802 T**			BMW
995 199	**VKDC 35802 T**			BMW
995 218	**VKDA 35508 T**	**VKDP 34500 T**	⚠	OPEL / VAUXHALL
995 218	**VKDA 35509 T**	**VKDP 34500 T**	⚠	OPEL / VAUXHALL
995 219	**VKDA 35508 T**	**VKDP 34500 T**	⚠	OPEL / VAUXHALL
995 219	**VKDA 35509 T**	**VKDP 34500 T**	⚠	OPEL / VAUXHALL
995 227	**VKDC 35814 T**		⚠	BMW
995 227	**VKDC 35815 T**		⚠	BMW
995 255	**VKDA 35116 T**	**VKDP 33111 T**	⚠	AUDI / SKODA / VW
995 255	**VKDA 35118 T**	**VKDP 33111 T**	⚠	AUDI / SKODA / VW
995 258	**VKDA 35113 T**	**VKDP 33101 T**		AUDI / SEAT / SKODA / VW
995 270	**VKDA 35521 T**			SAAB
995 298	**VKDC 35814 T**	**VKDP 33800 T**		BMW
995 299	**VKDC 35814 T**	**VKDP 33800 T**		BMW
995 317	**VKDA 35520 T**	**VKDP 33403 T**		SAAB
995 318	**VKDC 35627 T**		⚠	VOLVO
995 318	**VKDC 35634 T**		⚠	VOLVO
995 323	**VKDA 35110 T**	**VKDP 33100 T**	⚠	SEAT / VW
995 323	**VKDC 35102 T**	**VKDP 33100 T**	⚠	SEAT / VW
995 324	**VKDA 35110 T**	**VKDP 33100 T**	⚠	VW
995 324	**VKDA 35110 T**	**VKDP 33107 T**	⚠	VW
995 324	**VKDA 35110 T**	**VKDP 33108 T**	⚠	VW
995 324	**VKDC 35101 T**	**VKDP 33100 T**	⚠	VW
995 324	**VKDC 35101 T**	**VKDP 33107 T**	⚠	VW
995 324	**VKDC 35101 T**	**VKDP 33108 T**	⚠	VW
995 324	**VKDC 35102 T**	**VKDP 33100 T**	⚠	VW
995 324	**VKDC 35102 T**	**VKDP 33107 T**	⚠	VW
995 324	**VKDC 35102 T**	**VKDP 33108 T**	⚠	VW
995 333	**VKDA 35111 T**	**VKDP 33107 T**	⚠	SEAT / VW
995 333	**VKDA 35111 T**	**VKDP 33800 T**	⚠	SEAT / VW
995 333	**VKDA 35115 T**	**VKDP 33107 T**	⚠	SEAT / VW
995 333	**VKDA 35115 T**	**VKDP 33800 T**	⚠	SEAT / VW
995 346	**VKDA 35113 T**			AUDI
995 351	**VKDA 35116 T**		⚠	AUDI
995 351	**VKDA 35118 T**		⚠	AUDI
995 403		**VKDP 33802 T**		MERCEDES BENZ
995 412	**VKDA 35402 T**			FORD
995 413	**VKDA 40400 T**			FORD
995 446	**VKDC 35613 T**	**VKDP 33601 T**		VOLVO
995 447	**VKDC 35613 T**	**VKDP 33601 T**		VOLVO
995 448	**VKDC 35613 T**	**VKDP 33601 T**		VOLVO
995 449	**VKDC 35613 T**	**VKDP 33601 T**		VOLVO
995 462	**VKDA 35417 T**	**VKDP 33402 T**	⚠	FORD
995 462	**VKDA 35425 T**	**VKDP 33402 T**	⚠	FORD
995 463	**VKDA 35417 T**	**VKDP 33402 T**	⚠	FORD
995 463	**VKDA 35425 T**	**VKDP 33402 T**	⚠	FORD
995 466	**VKD 35001 T**	**VKDP 32600 T**	⚠	RENAULT
995 466	**VKDA 35615 T**	**VKDP 32600 T**	⚠	RENAULT
995 470	**VKDA 35308 T**	**VKDP 32301 T**	⚠	PEUGEOT
995 470	**VKDA 35308 T**	**VKDP 33303 T**	⚠	PEUGEOT
995 470	**VKDA 35308 T**	**VKDP 33306 T**	⚠	PEUGEOT
995 470	**VKDA 35309 T**	**VKDP 32301 T**	⚠	PEUGEOT
995 470	**VKDA 35309 T**	**VKDP 33303 T**	⚠	PEUGEOT
995 470	**VKDA 35309 T**	**VKDP 33306 T**	⚠	PEUGEOT
995 471	**VKDA 35308 T**	**VKDP 32301 T**	⚠	PEUGEOT
995 471	**VKDA 35308 T**	**VKDP 33303 T**	⚠	PEUGEOT
995 471	**VKDA 35308 T**	**VKDP 33306 T**	⚠	PEUGEOT
995 471	**VKDA 35309 T**	**VKDP 32301 T**	⚠	PEUGEOT
995 471	**VKDA 35309 T**	**VKDP 33303 T**	⚠	PEUGEOT
995 471	**VKDA 35309 T**	**VKDP 33306 T**	⚠	PEUGEOT
995 472	**VKDA 40204 T**			ALFA ROMEO
995 506	**VKDA 35417 T**	**VKDP 33402 T**	⚠	FORD
995 506	**VKDA 35425 T**	**VKDP 33402 T**	⚠	FORD
995 507	**VKDA 35417 T**	**VKDP 33402 T**	⚠	FORD
995 507	**VKDA 35425 T**	**VKDP 33402 T**	⚠	FORD
995 515	**VKDA 35220 T**		⚠	FIAT
995 515	**VKDA 35221 T**		⚠	FIAT
995 515	**VKDA 35225 T**		⚠	FIAT
995 520	**VKDA 35115 T**	**VKDP 33800 T**		SKODA
995 532	**VKDC 35627 T**			VOLVO
995 535	**VKDA 35418 T**	**VKDP 33411 T**		FORD
995 553	**VKDA 35508 T**	**VKDP 34500 T**		OPEL / VAUXHALL
995 554	**VKDA 35508 T**	**VKDP 34500 T**		OPEL / VAUXHALL
995 587	**VKDA 35607 T**	**VKDP 31601 T**		RENAULT
995 610	**VKDA 35115 T**	**VKDP 33800 T**		AUDI / SEAT / VW
995 660	**VKDA 35508 T**			OPEL
995 661	**VKDA 35508 T**			OPEL
995 667	**VKDA 35300 T**	**VKDP 33300 T**	⚠	CITROËN / PEUGEOT
995 667	**VKDA 35300 T**	**VKDP 34303 T**	⚠	CITROËN / PEUGEOT
995 667	**VKDA 35302 T**	**VKDP 33300 T**	⚠	CITROËN / PEUGEOT
995 667	**VKDA 35302 T**	**VKDP 34303 T**	⚠	CITROËN / PEUGEOT
995 670	**VKDA 35306 T**	**VKDP 33300 T**	⚠	PEUGEOT
995 670	**VKDA 35307 T**	**VKDP 33300 T**	⚠	PEUGEOT
995 671	**VKDA 35306 T**	**VKDP 33300 T**	⚠	PEUGEOT
995 671	**VKDA 35307 T**	**VKDP 33300 T**	⚠	PEUGEOT
995 675	**VKDA 35509 T**			OPEL
995 676	**VKDA 35509 T**			OPEL
995 677	**VKDA 35110 T**	**VKDP 33100 T**	⚠	SEAT
995 677	**VKDA 35110 T**	**VKDP 33108 T**	⚠	SEAT
995 677	**VKDC 35102 T**	**VKDP 33100 T**	⚠	SEAT
995 677	**VKDC 35102 T**	**VKDP 33108 T**	⚠	SEAT
995 678	**VKDA 35110 T**	**VKDP 33108 T**	⚠	SEAT
995 678	**VKDA 35110 T**	**VKDP 33100 T**	⚠	SEAT
995 678	**VKDC 35102 T**	**VKDP 33108 T**	⚠	SEAT
995 678	**VKDC 35102 T**	**VKDP 33100 T**	⚠	SEAT
995 727	**VKDA 35122 T**			AUDI / VW
999 170	**VKDC 35102 T**	**VKDP 33100 T**		VW
999 192	**VKDA 35112 T**	**VKDP 33203 T**	⚠	SKODA
999 192	**VKDA 35112 T**	**VKDP 33110 T**	⚠	SKODA
999 193		**VKDP 43100 T**		SKODA
999 272	**VKDC 35100 T**	**VKDP 32103 T**		AUDI
999 274		**VKDP 43101 T**		AUDI
999 303	**VKDA 35810 T**	**VKDP 33801 T**	⚠	MERCEDES BENZ
999 303	**VKDA 35811 T**	**VKDP 33801 T**	⚠	MERCEDES BENZ
999 358	**VKDA 35501 T**	**VKDP 33500 T**		OPEL / VAUXHALL
999 428		**VKDP 43101 T**		VW
999 491	**VKDC 35504 T**	**VKDP 33500 T**	⚠	DAEWOO / OPEL / VAUXHALL
999 491	**VKDC 35505 T**	**VKDP 33500 T**	⚠	DAEWOO / OPEL / VAUXHALL
999 544	**VKDC 35103 T**	**VKDP 33102 T**		VW
999 545	**VKDA 40102 T**	**VKDP 43102 T**		VW
999 568	**VKDA 40101 T**	**VKDP 43100 T**		VW

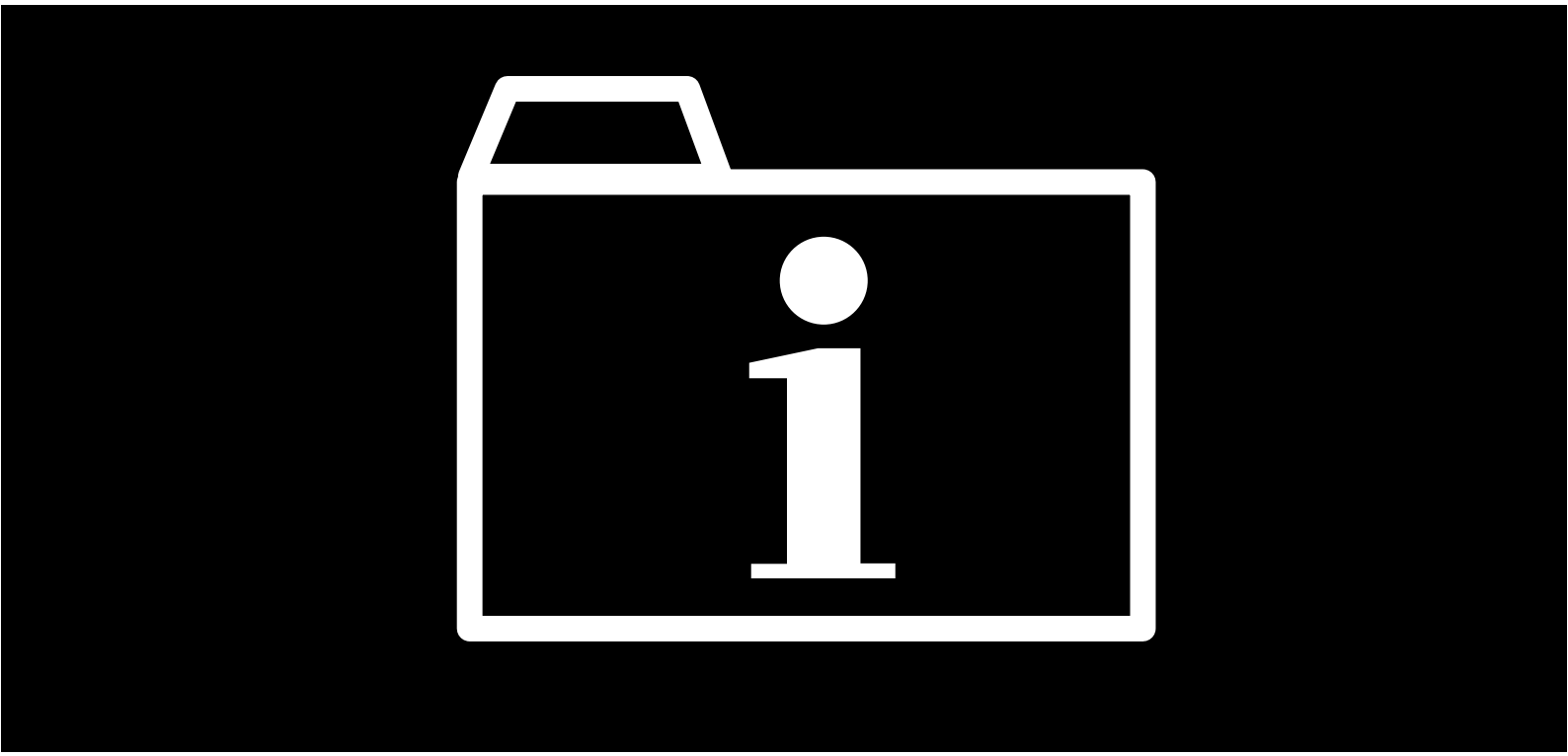

English 276
Deutsch 280
Français 284
Italiano 288
Español 292
Nederlands 296
Polski 300
Svenska 304
Norsk 308
Dansk 312
Suomi 316

Symbols

Symbols for catalogue sections

New, replaced and deleted kits

Vehicle applications

Illustrations and simplified application lists

Contents of kits

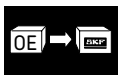

Conversion list – OE to SKF

Comparison list – Shock absorbers

Universal symbols

Replacement kits

Deleted kits

Ball joint

Passenger car

Station wagon

Hatchback

Fastback/liftback

Coupé

Cabriolet

Box body

Bus, minibus

Light truck

Pick up

Payload (kg)

Rough-road equipment

Anti-roll bar

Extended wheelbase

Number of doors

Power steering

Wheel

Diameter

Airbag

European models

Models for Sweden

For correct information consult pages 9 to 119

Abbreviation

I—>	From
—>I	Up to
/	Except
2WD	2-Wheel drive
AAS	Automatic adjusting suspension
ABS	Anti lock system
AC	Air conditioning
Auto. GBX	Automatic gearbox
Carb.	Carburator
CH	Chassis reference
DOHC	Double overhead camshaft
EDC	Electronic damping control
FWD	Front wheel drive
GPL	Liquid petroleum gas
HD	Heavy duty
HST	Hydraulic suspension technology
Inject	Fuel inject.
IST	Independent suspension technology
L.H.D	Left hand drive
Man. GBX	Manual gearbox
Mod.	Model reference
Mot.	Engine reference
R.H.D	Right hand drive
SPS	Sport suspension
VKD/A/C/P/S XXXXX T	In production
VKD/A/C/P/S XXXXX T	Product to be launched during 2006
VKD/A/C/P/S ____	Product under development
VKD/A/C/P/S XXXXX T	No longer manufactured
—	No kit available

Remarks

1) Except “Riche distinctive”
2) Except equipment code 1BA
3) Except “Eastern Europe”
4) Special engine protection plate
5) Except equipment code \48/
6) Except equipment code \50
7) Except equipment code \51/
8) Except equipment code \52/
9) Except equipment code \64/
10) Except equipment code 566
11) Except equipment code 567
12) Except equipment code G03
13) Except equipment code G19
14) Except equipment code G21
15) Except equipment code 1JF
16) Except equipment code UB2
17) Equipment code 1JF
18) Equipment code UB2
19) Except equipment code G92
20) Except equipment code 1JC
21) Except equipment code UB5
22) Equipment code 1JC
23) Equipment code UB5
24) Equipment code 1JB
25) Equipment code 1JD
26) Equipment code 1JH
27) Equipment code 1JA
28) Equipment code UB8
29) Equipment code UA9
30) Equipment code UB1
31) Equipment code UB3
32) Equipment code 1JK
33) Except equipment code 1JH

RENAULT

Information Plate to 1996

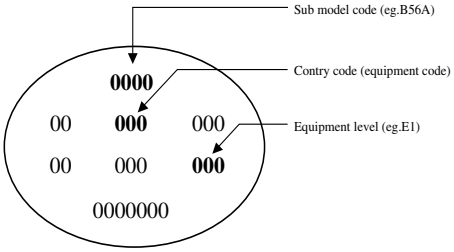

Information Plate from 1996

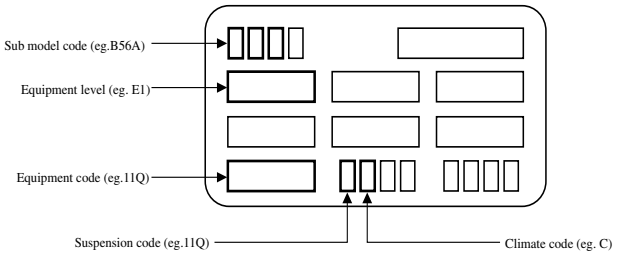

A = Normal suspension
B = Reinforced suspension

C = Tempered climate
D = Cold climate
E = Hot climate

VAG (Audi, Seat, Skoda, VW)

Identification plate stuck in the rear trunk, in the housing of the spare wheel

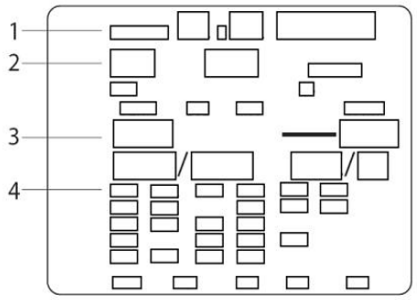

1) Identification number

2) Model code

3) Engine code

4) Equipment code

ENGLISH

How to use this catalogue

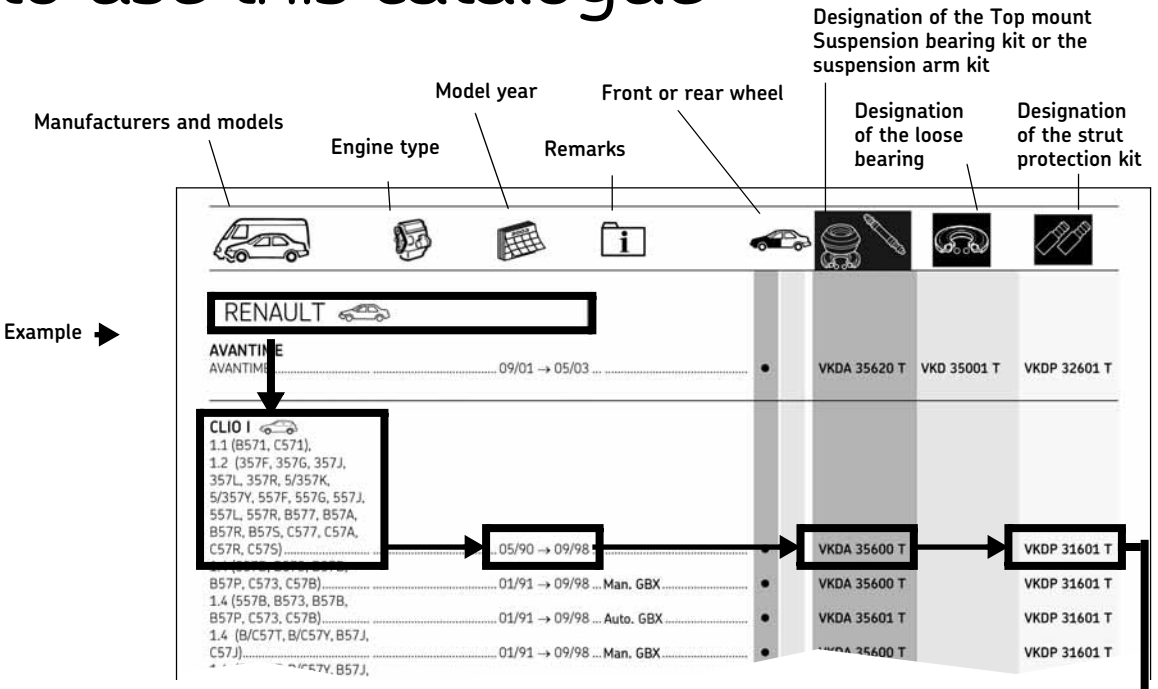

Visual identification

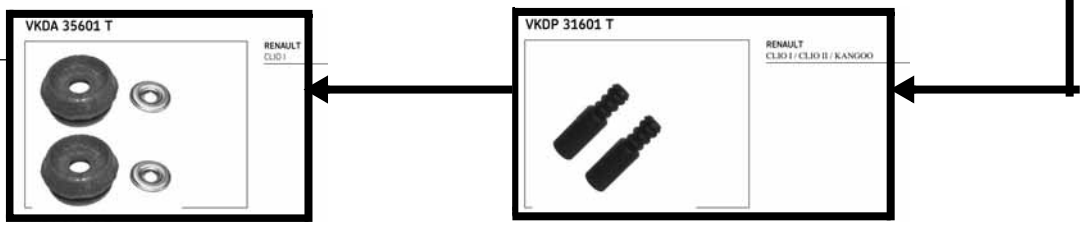

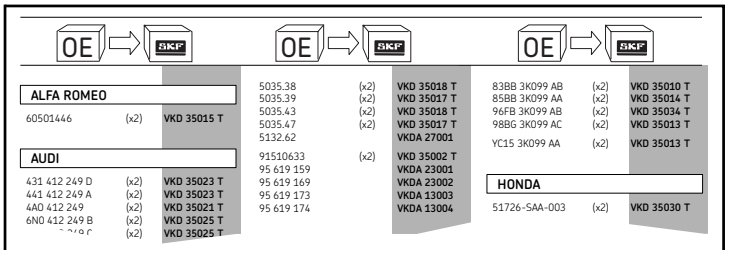

OE – reference to SKF

Shock absorber list

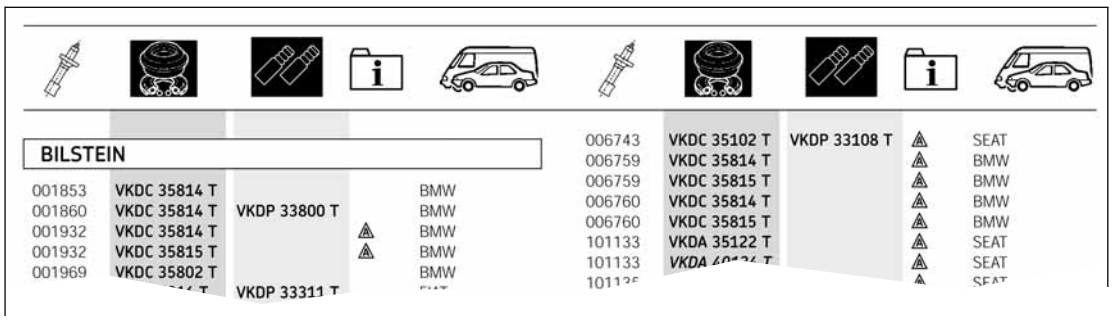

Contents of the kits

Top mount kit components

	A	B	C	D	E	F	G
VKD 24000		1					
VKD 35001 T		2					
		2					

	A	B	C	D	E	F	G
VKDC 35205				1			
VKDC 35206				1			

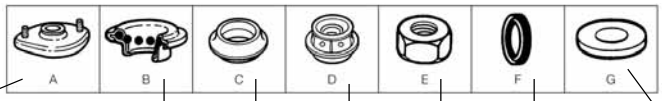

Strut insulator/ mounting assy. — Strut bearing — Rubber pad — Integrate unit — Lock nut — O-ring — Washer

Suspension arm bearing kit components

	A	B	C	D	E	F	G	H
VKDA 13003	2	1	2	2	2	2	4	
VKDA 13004	2					2		
VKDA 23001	2	1	1		1	4	1	

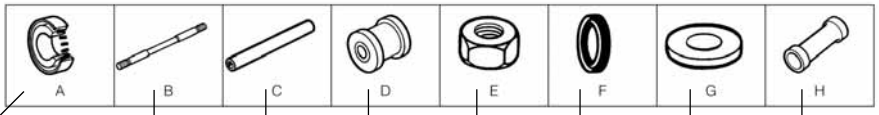

Taper roller bearing — Pin — Pin boot — Knuckle joint — Lock nut — O-ring — Washer — Dust cover

Strut protection kit components

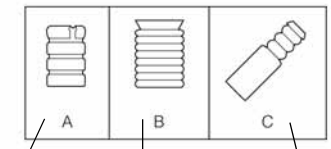

Bumper — Dust cover — Bumper with dust cover

	A	B	C
VKDP 31200 T			2
VKDP 31400 T			2
			2

	A	B	C
VKDP 41600 T			2
VKDP 43100 T	2	2	

Ball joint kit components

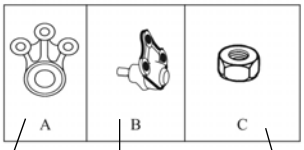

Bearing — Ball joint — Nut

	A	B	C
VKDS 13500	1	1	1

Symbole

Symbole im Katalog

Neue sätze

Anwendung

Bilder und vereinfachte Anwendungsliste

Inhalt der Sätze

Vergleichsliste OE

Vergleichsliste – Stoßdämpfer

Allgemeine Symbole

Geänderte sätze

Nicht mehr im sortiment

Kugelgelenk

Limousinen

Kombi

Kombi Coupe

Schrägheck

Coupe

Cabriolet

Kasten

Bus, Minibus

Lieferwagen

Pick up

Nutzlast (kg)

Off-road

Querstabilisator

Verlängerter Radstand

Anzahl der Türen

Servolenkung

Rad

Durchmesser

Airbag

Europäische Modelle

Modelle für Schweden

Weitere Info siehe Seite 9 bis 119

Abkürzungen

I—>	Von
—>I	Bis
/	Außer
AAS	Automatische Federbeineinstellung
2WD	2-Rad-Antrieb
ABS	ABS
AC	Klimaanlage
Auto. GBX	Automatikgetriebe
Carb.	Vergaser
CH	Fahrgestellnummern
EDC	Elektronische Dämpfungskontrolle
FWD	Vorderradantriebe
DOHC	2 obenliegende Nockenwellen
GPL	Flüssiggas
HD	Mit verstärkter Aufhängung
HST	Mit hydraulischer Federung
Inject	Einspritz
IST	Einzelradaufhängung
L.H.D	Linkslenkung
Man. GBX	Schaltgetriebe
Mod.	Modell Referenz
Mot.	Motor Referenz
R.H.D	Rechtslenkung
SPS	Sportaufhängung
VKD/A/C/P/S XXXXX T	In Produktion
VKD/A/C/P/S XXXXX T	Produkte für 2006 in Vorbereitung
VKD/A/C/P/S ____	Produkte in Vorbereitung
VKD/A/C/P/S XXXXX T	Nach Abverkauf nicht mehr im Sortiment
—	Kein Reparatursatz verfügbar

Bemerkungen

1) Außer “Riche distinctive”
2) Außer Ausstattungs-Code 1BA
3) Außer “Eastern Europe”
4) Spezialausführung
5) Außer Ausstattungs-Code \48/
6) Außer Ausstattungs-Code \50
7) Außer Ausstattungs-Code \51/
8) Außer Ausstattungs-Code \52/
9) Außer Ausstattungs-Code \64/
10) Außer Ausstattungs-Code 566
11) Außer Ausstattungs-Code 567
12) Außer Ausstattungs-Code G03
13) Außer Ausstattungs-Code G19
14) Außer Ausstattungs-Code G21
15) Außer Ausstattungs-Code 1JF
16) Außer Ausstattungs-Code UB2
17) Ausstattungs-Code 1JF
18) Ausstattungs-Code UB2
19) Außer Ausstattungs-Code G92
20) Außer Ausstattungs-Code 1JC
21) Außer Ausstattungs-Code UB5
22) Ausstattungs-Code 1JC
23) Ausstattungs-Code UB5
24) Ausstattungs-Code 1JB
25) Ausstattungs-Code 1JD
26) Ausstattungs-Code 1JH
27) Ausstattungs-Code 1JA
28) Ausstattungs-Code UB8
29) Ausstattungs-Code UA9
30) Ausstattungs-Code UB1
31) Ausstattungs-Code UB3
32) Ausstattungs-Code 1JK
33) Außer Ausstattungs-Code 1JH

RENAULT

***) Renault Identifikation → 1996**

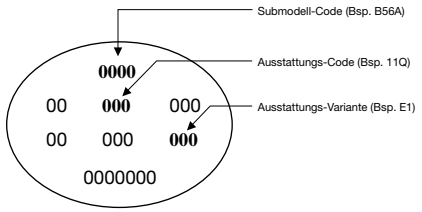

***) Renault Identifikation 1996 →**

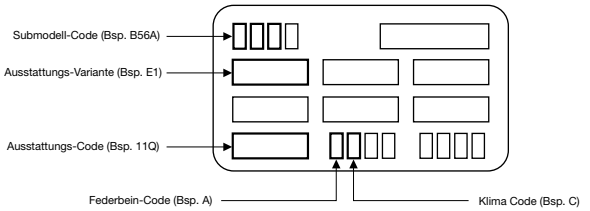

A= Normale Aufhängung
B = Mit verstärkter Aufhängung

C = Gemäßigte Klimazone
D = Niedrige Temperaturen
E = Tropische Klimazone

VAG (Audi, Seat, Skoda, VW)

Typenschild ist im Kofferraum in der Ersatzradmulde angebracht

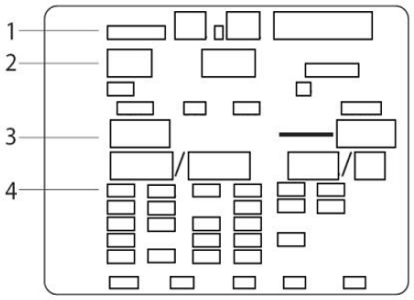

1) Typnummer

2) Modell Code

3) Motor Code

4) Ausstattungs-Code

DEUTSCH

Hinweise zur Benutzung des Kataloges

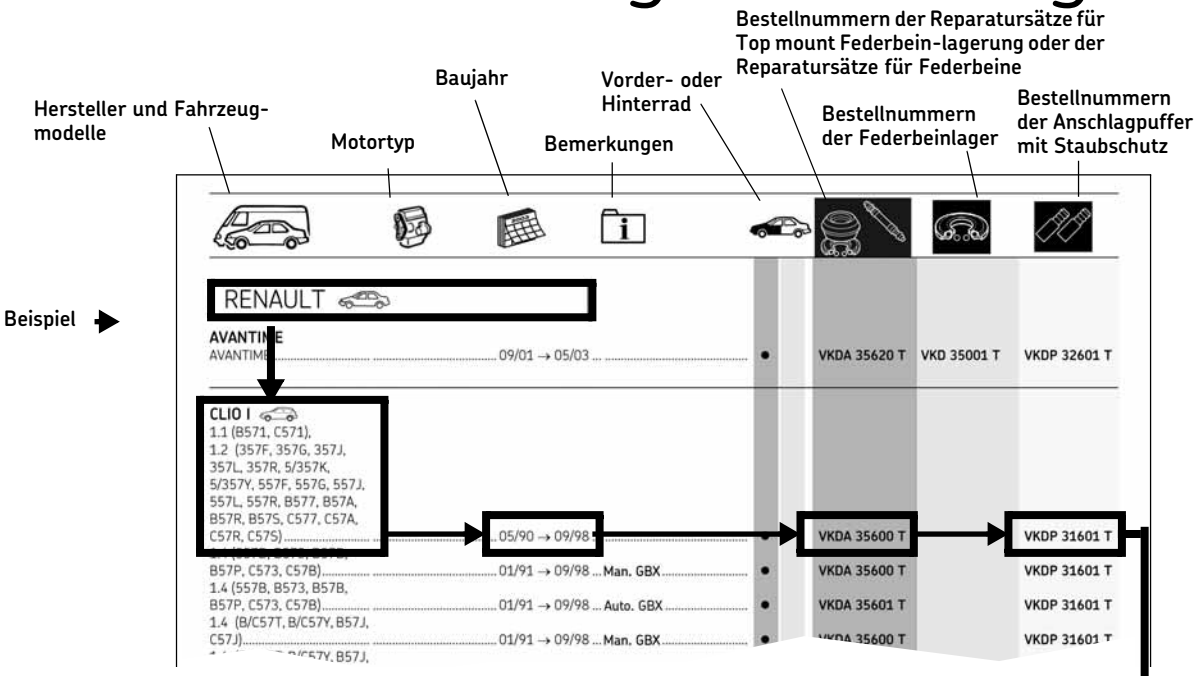

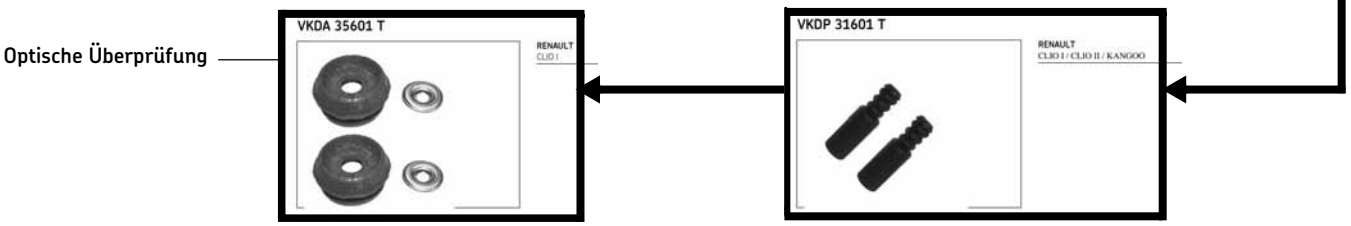

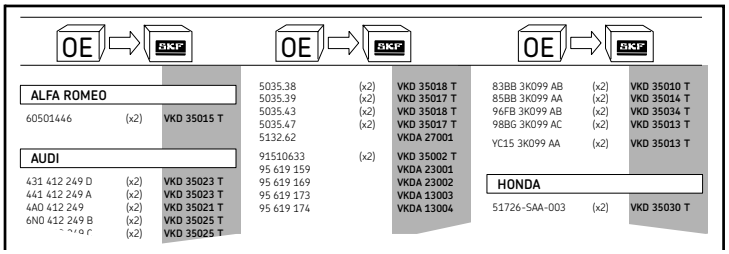

OE – SKF Vergleichsliste

Vergleichs-liste – Stossdämper

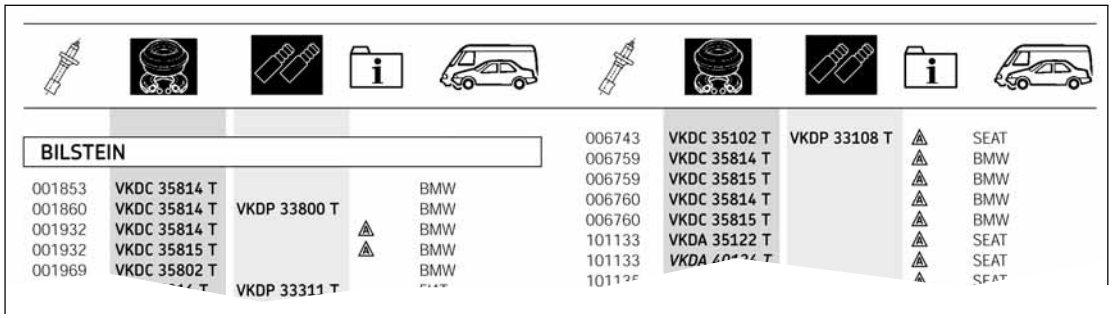

Inhalt der Reparatursätze

Bestandteile des Reparatursätze für Top mount Federbeinlagerung

	A	B	C	D	E	F	G
VKD 24000		1					
VKD 35001 T		2					
		2					

	A	B	C	D	E	F	G
VKDC 35205				1			
VKDC 35206				1			

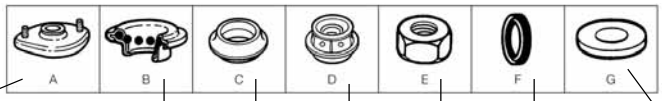

Stoßdämpfer-bock
Federbein-stützlager
Gummi-dämpfer
Integrierte Einheit
Mutter
Dichtring
Scheibe

Bestandteile des Reparatursätze für Federbeine

	A	B	C	D	E	F	G	H
VKDA 13003	2	1	2	2	2	2	4	
VKDA 13004	2					2		
VKDA 23001	2	1	1		1	4	1	

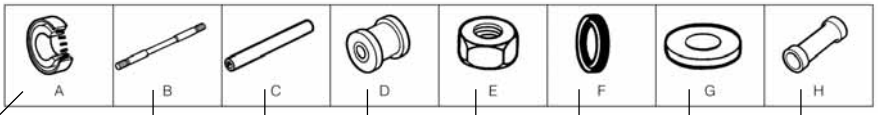

Kegelrollenlager
Achse
Rohr
Gelenk
Mutter
Dichtring
Scheibe
Staubschutz

Anschlagpuffer mit Staubschutz

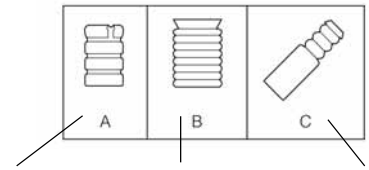

Anschlag-puffer
Staub-schutz
Anschlagpuffer mit Staubschutz

	A	B	C
VKDP 31200 T			2
VKDP 31400 T			2

	A	B	C
VKDP 41600 T			2
VKDP 43100 T	2	2	

Ball joint kit

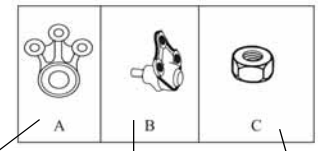

Lager
Kugelgelenk
Mutter

	A	B	C
VKDS 13500	1	1	1

Symboles

Symboles

Nouveaux kits, remplacements et kits annulés

Liste des marques et modèles

Illustrations et liste d´applications simplifiées

Contenu des kits

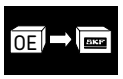

Liste de correspondance constructeurs – SKF

Liste de correspondance amortisseurs

Symboles universels

Remplacements

Kits annulés

Rotule de suspension

Berlines (Tricorps)

Break

Compact (Bicorps)

Fastback/liftback

Coupé

Cabriolet

Camionette

Autobus

Utilitaire léger

Pick up

Chargement (kg)

Route mauvaise

Barre anti-roulis

Chassis long

Nombre de portes

Direction assistée

Roue

Diamétre

Airbag

Modèles Européens

Modéles pour la Suéde

Pour les informations complètes, voir pages 9 à 119

Abréviations

I—>	A partir de
—>I	Jusqu'à
/	Sauf
2WD	2 roues motrices
AAS	Suspension pilotée
ABS	ABS
AC	Climatisation
Auto. GBX	Boîte de vitesses automatique
Carb.	Carburateur
CH	Référence du chassis
DOHC	Double arbre à cames en tête
EDC	Suspension à contrôle électronique
FWD	Traction avant
GPL	GPL
HD	Avec suspension renforcée
HST	Technologie suspension hydraulique
Inject	Injection
IST	Technologie suspension indépendante
L.H.D	Conduite à gauche
Man. GBX	Boîte de vitesses manuelle
Mod.	Modèle
Mot.	Référence de moteur
R.H.D	Conduite à droite
SPS	Suspension sport
VKD/A/C/P/S XXXXX T	Disponibles
VKD/A/C/P/S XXXXX T	Disponible courant 2006
VKD/A/C/P/S ____	En projet
VKD/A/C/P/S XXXXX T	N'est plus fabriqué
––	Pas de kit disponible

Remarques

1) Sauf “Riche distinctive”
2) Sauf code équipement 1BA
3) Sauf “Sauf Europe de l'est”
4) Protection spéciale sous caisse
5) Sauf code équipement \48/
6) Sauf code équipement \50
7) Sauf code équipement \51/
8) Sauf code équipement \52/
9) Sauf code équipement \64/
10) Sauf code équipement 566
11) Sauf code équipement 567
12) Sauf code équipement G03
13) Sauf code équipement G19
14) Sauf code équipement G21
15) Sauf code équipement 1JF
16) Sauf code équipement UB2
17) Code équipement 1JF
18) Code équipement UB2
19) Sauf code équipement G92
20) Sauf code équipement 1JC
21) Sauf code équipement UB5
22) Code équipement 1JC
23) Code équipement UB5
24) Code équipement 1JB
25) Code équipement 1JD
26) Code équipement 1JH
27) Code équipement 1JA
28) Code équipement UB8
29) Code équipement UA9
30) Code équipement UB1
31) Code équipement UB3
32) Code équipement 1JK
33) Sauf code équipement 1JH

RENAULT

***) Plaque ovale Renault → 1996**

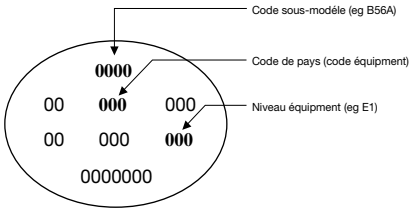

***) Plaque ovale Renault 1996 →**

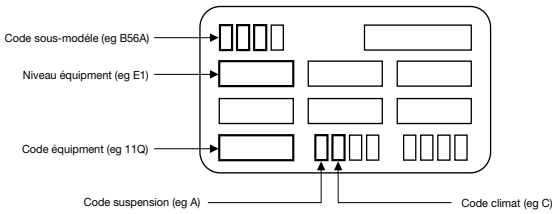

A= Suspension normale
B = Suspension renforcée
C = Pays tempéré
D = Pays grand froid
E = Pays tropicaux

VAG (Audi, Seat, Skoda, VW)

La plaque d'identification est collée dans le coffre à bagages, dans le logement de la roue de secours.

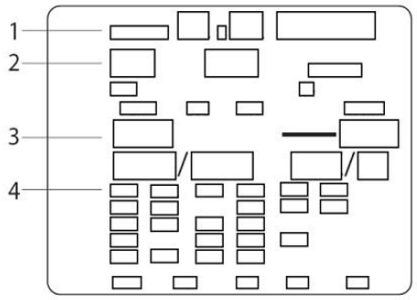

1) Numéro d'identification

2) Code Modèle

3) Code moteur

4) Codes équipements

FRANÇAIS

Comment utiliser le catalogue

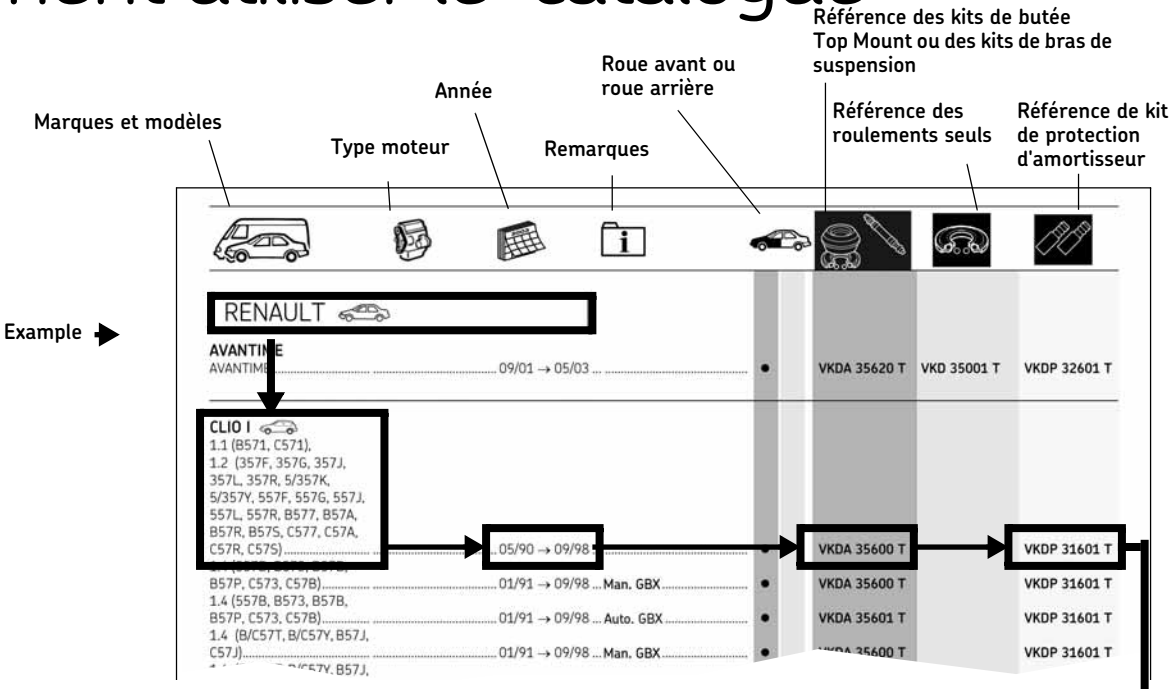

Identification visuelle

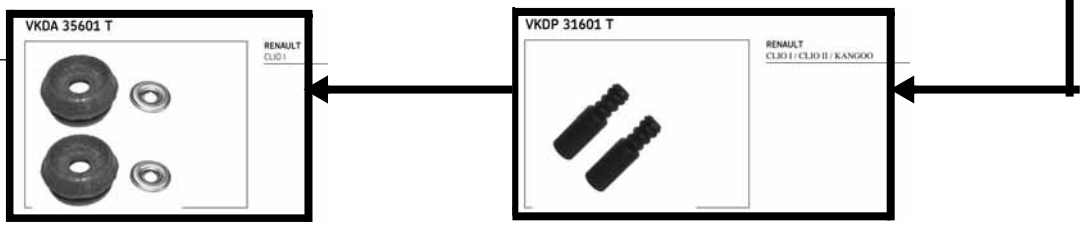

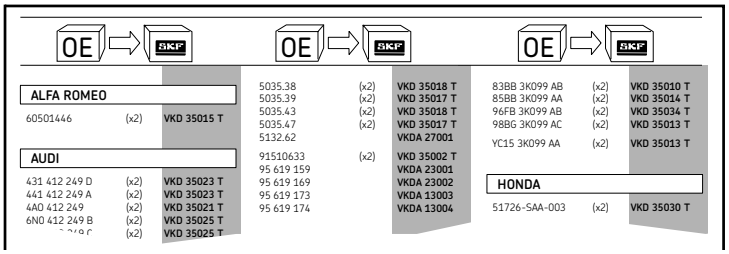

Correspondance des références constructeurs – SKF

Liste de correspondanc amortisseurs

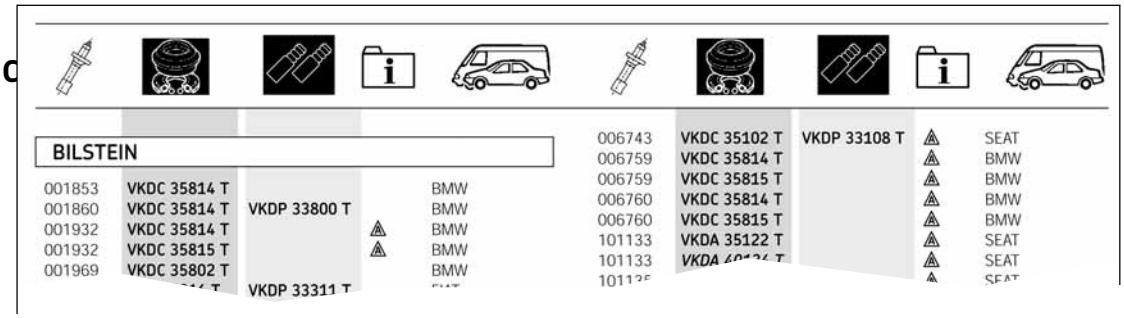

Contenu des kits

Composition du kit Top Mount

	A	B	C	D	E	F	G
VKD 24000		1					
VKD 35001 T		2					
		2					

	A	B	C	D	E	F	G
VKDC 35205				1			
VKDC 35206				1			

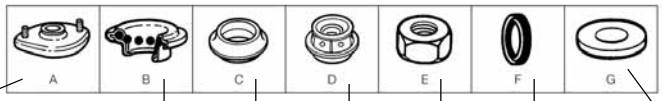

Bloc filtrant Support amortisseur — Roulement de butée — Tampon — Palier — Ecrou — Joint — Rondelle

Composition du kit de bras de suspension

	A	B	C	D	E	F	G	H
VKDA 13003	2	1	2	2	2	2	4	
VKDA 13004	2					2		
VKDA 23001	2	1	1		1	4	1	

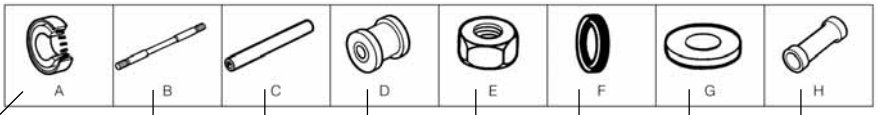

Roulement — Axe — Tube — Articulation — Ecrou — Joint — Rondelle — Soufflet

Composition du kit de protection d'amortisseur

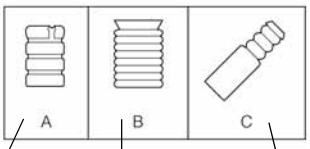

Butée — Soufflet — Butée et soufflet monobloc

	A	B	C
VKDP 31200 T			2
VKDP 31400 T			2
			2

	A	B	C
VKDP 41600 T			2
VKDP 43100 T	2	2	

Composition du kit de rotule de suspension

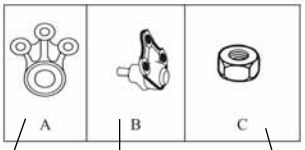

Roulement — Rotule de suspension — Ecrou

	A	B	C
VKDS 13500	1	1	1

Simboli

Simboli per le sezioni del catalogo

Nuovi kit, sostituzioni e kit annullati

Applicazioni

Illustrazioni e lista applicazioni semplificata

Contenuto dei kit

Liste di corrispondenza costruttore – SKF

Liste di corrispondenza – Ammortizzatore

Simboli universali

Sostituzioni

Kits annullati

Kit giunto sferico

Berlina

Station wagon

Portellone posteriore

Portellone posteriore

Coupè

Cabriolet

Autocarri leggeri

Bus, minibus

Autocarro leggero

Pick up

Carico utile (kg)

Equipaggiamento fuori strada

Barra Antirollio

Passo prolungato/telaio lungo

Numero di porte

Servosterzo

Ruota

Diametro

Airbag

Modelli Europei

Modelli per la Svezia

Per le informazioni corrette consulti le pagine 9–119

Abbreviazioni

I—>	A partire da
—>I	Fino a
/	Escluso
2WD	2 ruote motrici
AAS	Con sospensioni ad aggiustamento automatico
ABS	Sistema anti-bloccaggio
AC	Aria condizionata
Auto. GBX	Cambio automatico
Carb.	Carburatore
CH	Numero di telaio
DOHC	2 alberi a camme in testa
EDC	Controllo elettronico ammortizzatori
FWD	Trazione anteriore
GPL	Gas
HD	Con sospensione rinforzata/ aumento della portata
HST	Tecnologia sospensione idraulica
Inject	Iniezione
IST	Tecnologia a sospensione indipendente
L.H.D	Guida a sinistra
Man. GBX	Cambio manuale
Mod.	Versione dei modelli
Mot.	Riferimento del motore
R.H.D	Guida a destra
SPS	Con assetto sportivo
VKD/A/C/P/S XXXXX T	In produzione
VKD/A/C/P/S XXXXX T	Prodotti che verranno lanciatinnel 2006
VKD/A/C/P/S ____	Prodotti in sviluppo
VKD/A/C/P/S XXXXX T	Non piú in produzione
—	Kit non disponible

Osservazioni

1) Escluso modelli con allestimenti di lusso
2) Escluso Codice di equipaggiamento 1BA
3) Escluso modelli Europa Orientale
4) Per modelli equipaggiati con protezione speciale del motore
5) Escluso Codice di equipaggiamento \48/
6) Escluso Codice di equipaggiamento \50
7) Escluso Codice di equipaggiamento \51/
8) Escluso Codice di equipaggiamento \52/
9) Escluso Codice di equipaggiamento \64/
10) Escluso Codice di equipaggiamento 566
11) Escluso Codice di equipaggiamento 567
12) Escluso Codice di equipaggiamento G03
13) Escluso Codice di equipaggiamento G19
14) Escluso Codice di equipaggiamento G21
15) Escluso Codice di equipaggiamento 1JF
16) Escluso Codice di equipaggiamento UB2
17) Codice di equipaggiamento 1JF
18) Codice di equipaggiamento UB2
19) Escluso Codice di equipaggiamento G92
20) Escluso Codice di equipaggiamento 1JC
21) Escluso Codice di equipaggiamento UB5
22) Codice di equipaggiamento 1JC
23) Codice di equipaggiamento UB5
24) Codice di equipaggiamento 1JB
25) Codice di equipaggiamento 1JD
26) Codice di equipaggiamento 1JH
27) Codice di equipaggiamento 1JA
28) Codice di equipaggiamento UB8
29) Codice di equipaggiamento UA9
30) Codice di equipaggiamento UB1
31) Codice di equipaggiamento UB3
32) Codice di equipaggiamento 1JK
33) Escluso Codice di equipaggiamento 1JH

RENAULT

***) Targa di identificazione Renault → 1996**

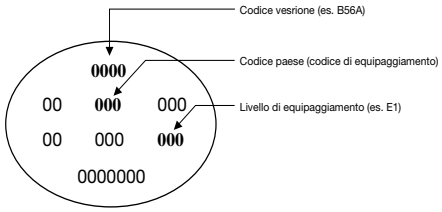

***) Targa di identificazione Renault 1996 →**

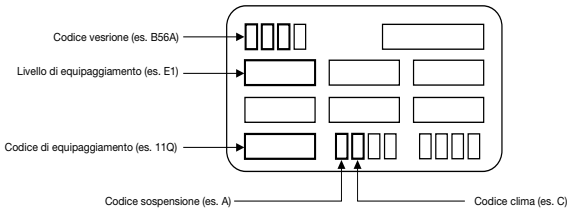

A= Sospensione normale
B = Con sospensione rinforzata

C = Clima temperato
D = Clima freddo
E = Clima tropicale

VAG (Audi, Seat, Skoda, VW)

Targa identificativa posta nel vano ruota

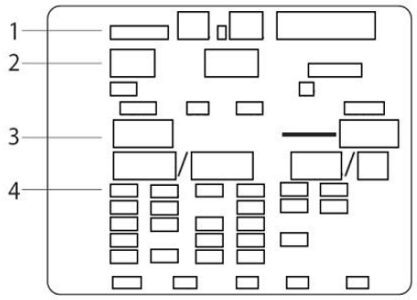

1) Numero di identificazione

2) Codice modello

3) Codice motore

4) Codice di equipaggiamento

Come utilizzare il catalogo

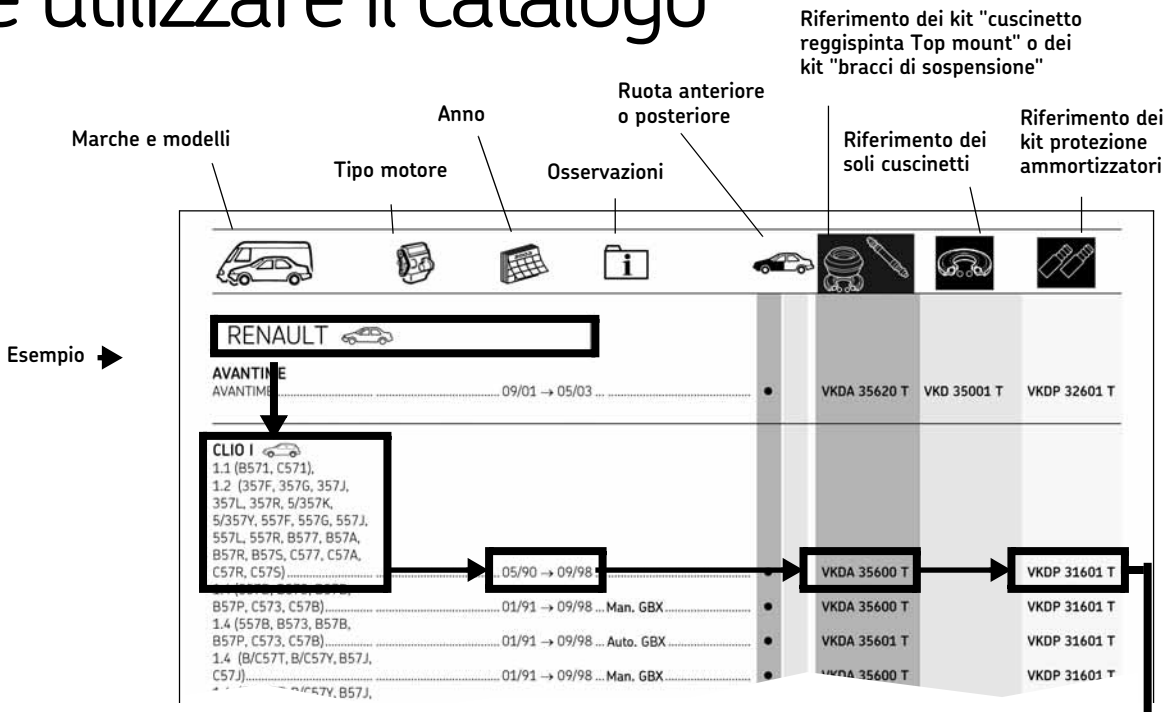

Identificazione visiva

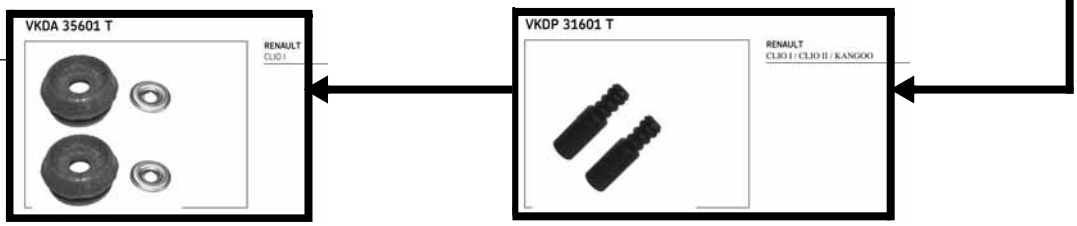

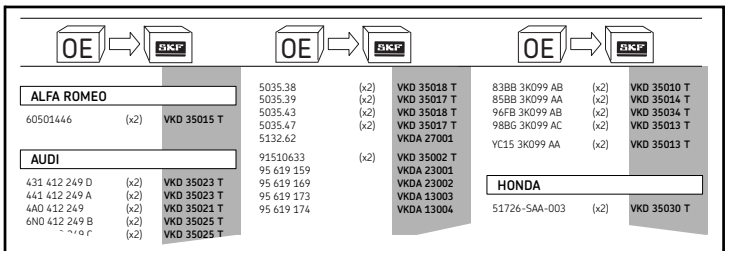

Lista di corrispondenza costruttore/SKF

Lista applicazioni

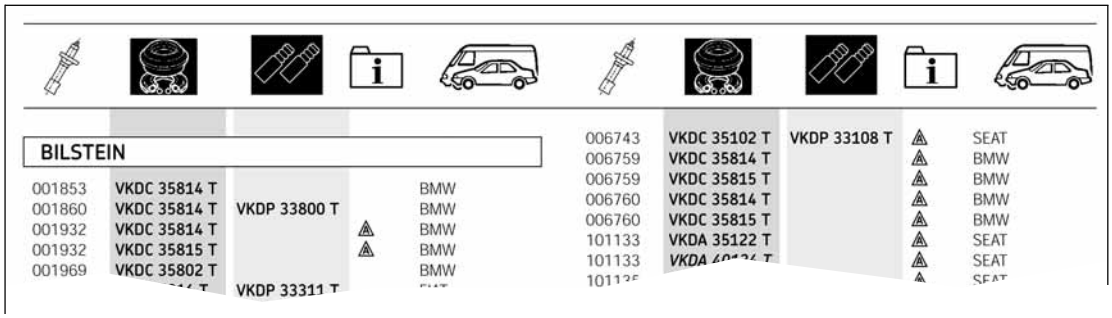

Contenuto dei kit

Componente dei kit Top mount

	A	B	C	D	E	F	G
VKD 24000		1					
VKD 35001 T		2					
		2					

	A	B	C	D	E	F	G
VKDC 35205				1			
VKDC 35206				1			

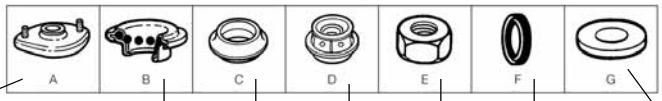

Blocco filtranta/ Supporto ammortizzatore — Cuscinetto reggispinta — Paracolpi — Supporto — Dado — Guarnizione — Rondella

Componente dei kit dei bracci di sospensione

	A	B	C	D	E	F	G	H
VKDA 13003	2	1	2	2	2	2	4	
VKDA 13004	2					2		
VKDA 23001	2	1	1		1	4	1	

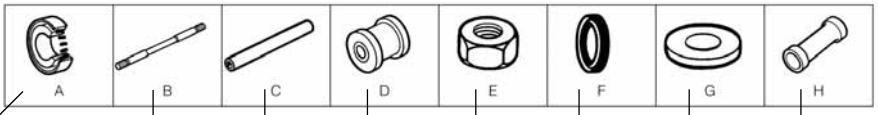

Cuscinetto — Asse — Tubo — Articolazione — Dado — Guarnizione — Rondella — Protettore

Componente dei kit protezione ammortizzatori

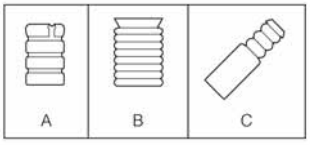

Paracolpi — Parapolvere — Paracolpi e parapolvere

	A	B	C
VKDP 31200 T			2
VKDP 31400 T			2

	A	B	C
VKDP 41600 T			2
VKDP 43100 T	2	2	

Kit giunto sferico

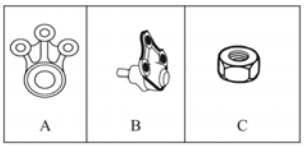

Cuscinetto — Giunto sferico — Dado

	A	B	C
VKDS 13500	1	1	1

Símbolos

Símbolos para las secciones del catálogo

Nuevos kits, sustituciones o kits anulados

Lista de marcas y modelos

Identificación o lista de aplicaciones simplificada

Contenido de los kits

Lista de correspondencias constructores – SKF

Lista de correspondencias – Amortiguador/kit SKF

Símbolos universales

Sustituciones

Kits anulados

Rótula

Turismos

Modelos familiares

Cinco puertas

Fastback/liftack

Cupé

Cabriolet

Vehículo industrial

Bus

Furgoneta

Camioneta

Carga útil (kg)

Équipamiento todo-terreno

Barra anti balanceo

Distancia entre ejes prolongada/carrocería larga

Número de puertas

Servo dirección

Rueda

Diámetro

Airbag

Modelos Europeos

Modelos para Sweden

Para una correcta información consulte las páginas 9 a 119

Abreviaturas

I—>	Desde
—>I	Hasta
/	Excepto
2WD	2 ruedas direccionales
AAS	Suspensión de ajuste automático
ABS	Sistema antibloqueo de frenos
AC	Aire acondicionado
Auto. GBX	Transmisión automática
Carb.	Carburador
CH	Referencia del chasis
DOHC	Doble árbol de levas en cabeza
EDC	Control electrónico de amortiguación
FWD	Tracción delantera
GPL	Gas líquido del petróleo
HD	Con suspensión reforzada
HST	Tecnología de suspensión hidráulica
Inject	Inyección
IST	Tecnología de suspensión independiente
L.H.D	Conducción izquierda
Man. GBX	Cambio automático
Mod.	Referencia modelo
Mot.	Referencia de motor
R.H.D	Conducción derecha
SPS	Con suspensión sport
VKD/A/C/P/S XXXXX T	En producción
VKD/A/C/P/S XXXXX T	Producto en lanzamiento durante el 2006
VKD/A/C/P/S ____	Productos bajo desarrollo
VKD/A/C/P/S XXXXX T	Finalizada su producción
—	Kit no disponible

Observaciones

1) Excepto modelos equipados con opción "Riche distinctive"
2) Excepto código de equipamiento 1BA
3) Excepto modelos para países del Este
4) Placa especial de protección del motor
5) Excepto código de equipamiento \48/
6) Excepto código de equipamiento \50
7) Excepto código de equipamiento \51/
8) Excepto código de equipamiento \52/
9) Excepto código de equipamiento \64/
10) Excepto código de equipamiento 566
11) Excepto código de equipamiento 567
12) Excepto código de equipamiento G03
13) Excepto código de equipamiento G19
14) Excepto código de equipamiento G21
15) Excepto código de equipamiento 1JF
16) Excepto código de equipamiento UB2
17) Código de equipamiento 1JF
18) Código de equipamiento UB2
19) Excepto código de equipamiento G92
20) Excepto código de equipamiento 1JC
21) Excepto código de equipamiento UB5
22) Código de equipamiento 1JC
23) Código de equipamiento UB5
24) Código de equipamiento 1JB
25) Código de equipamiento 1JD
26) Código de equipamiento 1JH
27) Código de equipamiento 1JA
28) Código de equipamiento UB8
29) Código de equipamiento UA9
30) Código de equipamiento UB1
31) Código de equipamiento UB3
32) Código de equipamiento 1JK
33) Excepto código de equipamiento 1JH

RENAULT

***) Placa de identificación Renault de → 1996**

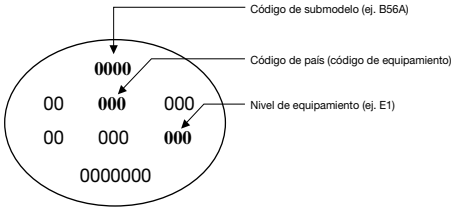

***) Placa de identificación Renault de 1996 →**

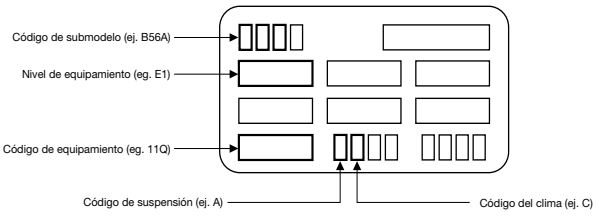

A = Suspensión
B = Con suspensión reforzada
C = Clima templado
D = Clima frio
E = Clima tropical

VAG (Audi, Seat, Skoda, VW)

Placa de identificación situada en el maletero, en el hueco de la rueda de respuesto

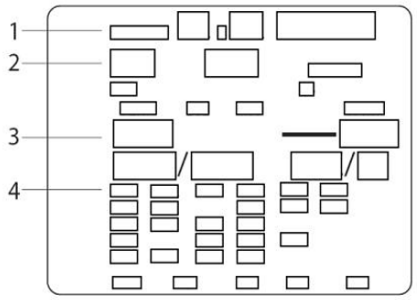

1) Número de identificaión
2) Código de modelo
3) Código de motor
4) Código de equipamiento

ESPAÑOL

Cómo utilizar el catálogo

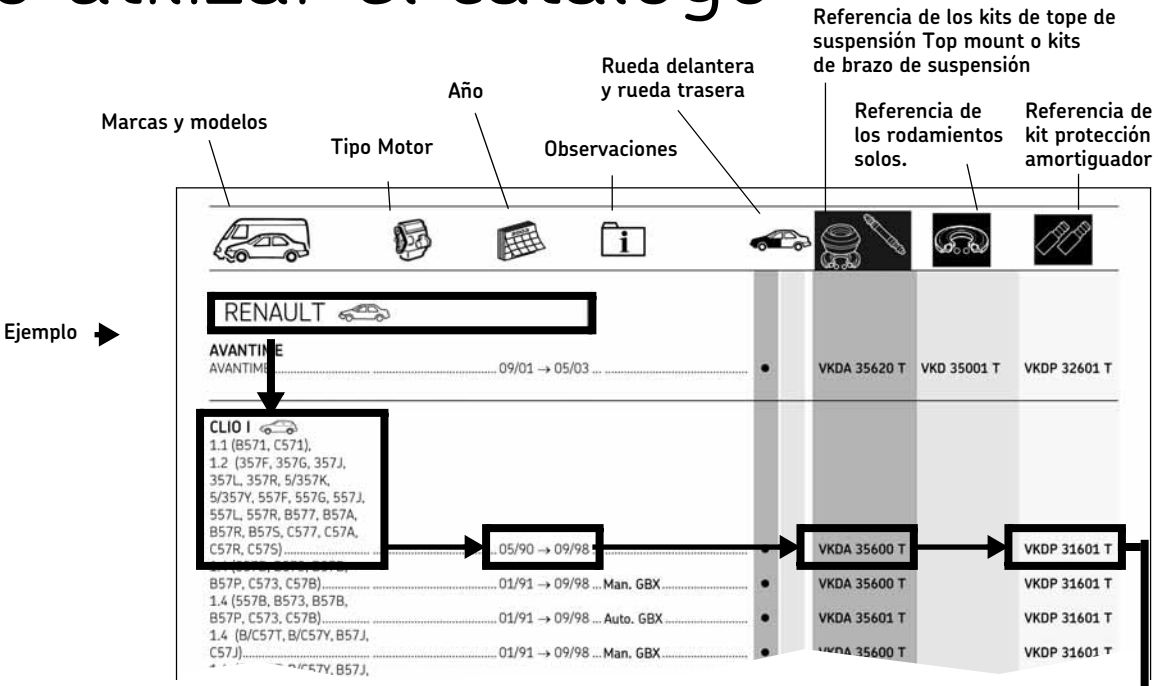

Identificación visual

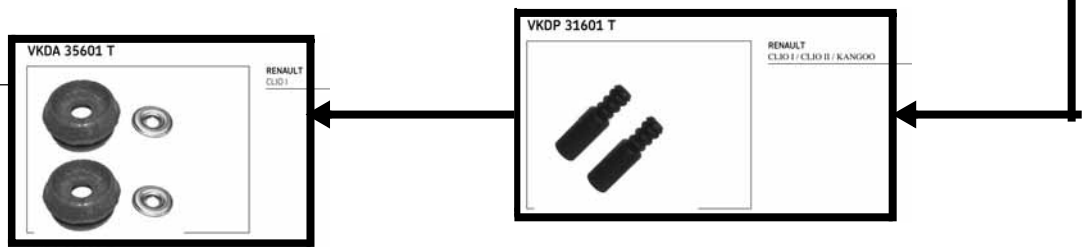

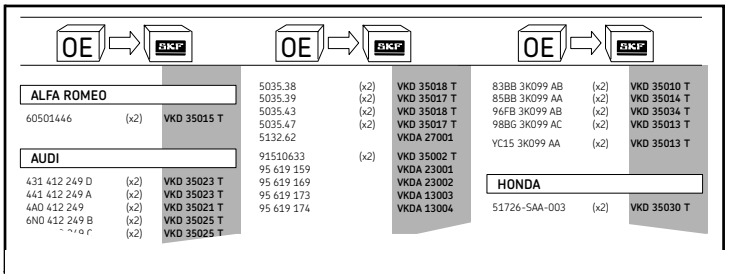

Lista correspondencias constructores - SKF

Lista de correspondencias – Amortiguador/kit SKF

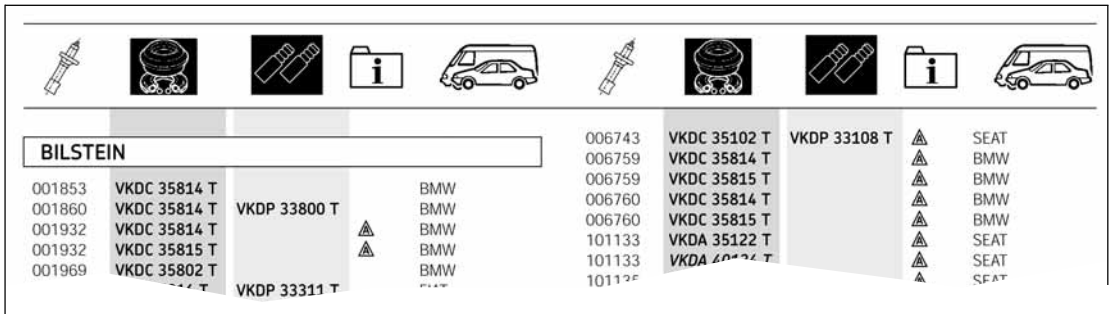

Contenido de los kits

Componentes de los kits de suspensión Top mount

	A	B	C	D	E	F	G
VKD 24000		1					
VKD 35001 T		2					
		2					

	A	B	C	D	E	F	G
VKDC 35205				1			
VKDC 35206				1			

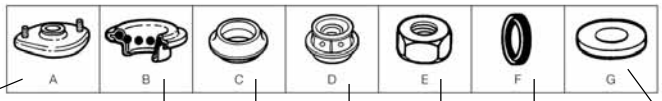

Bloque filtrante/ Soporte amortiguador
Rodamiento de suspensión
Tope
Palier
Tuerca
Junta
Arandela

Componentes de los kits de brazos de suspensión

	A	B	C	D	E	F	G	H
VKDA 13003	2	1	2	2	2	2	4	
VKDA 13004	2					2		
VKDA 23001	2	1	1		1	4	1	

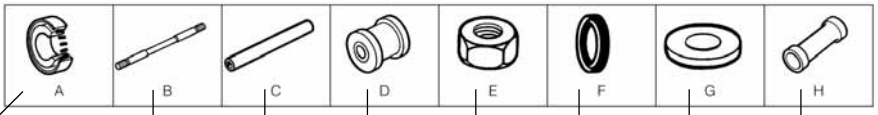

Rodamiento
Eje
Tubo
Articulación
Tuerca
Junta
Arandella
Protector

Componentes de los kit de protección amortiguador

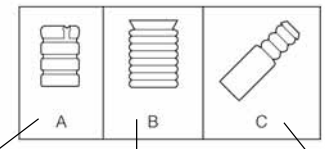

Tope
Fuelle protector
Tope con fuelle protector

	A	B	C
VKDP 31200 T			2
VKDP 31400 T			2

	A	B	C
VKDP 41600 T			2
VKDP 43100 T	2	2	

Componentes del Kit de rótula

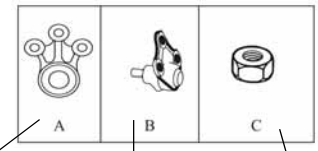

Rodmiento
Rótula
Tuerca

	A	B	C
VKDS 13500	1	1	1

Symbolen

Symbolen gebruikt in deze catalogus

Nieuwe sets en vervangingen

Toepassingslijst merken en modellen

Illustraties en vereenvoudigde toepassingslijst

Inhoud van de sets

Crosslijst - OE naar SKF

Crosslijst - Schokdempers

Universele symbolen

Vervangen sets

Geschrapte sets

Fuseekogel

Personenauto

Breaks

5-deurs

Fastback/liftback

Coupé

Cabriolet

Bestelauto

Bus, minibus

Bestelauto

Pick up/Flat bed

Nuttige last (kg)

Uitrusting voor ruw terrein

Stabilisatorstang

Verlengte wielbasis

Aantal deuren

Stuurbekrachtiging

Wiel

Diameter

Airbag

Europese modellen

Modellen voor Zweden

Voor correcte informatie zie pag. 9 tot 119

Afkortingen

I—>	Vanaf
—>I	Tot
/	Behalve
2WD	2 wiel aandrijving
AAS	Automatisch afgestelde ophanging
ABS	Anti-blokkeer remsysteem
AC	Air conditioning
Auto. GBX	Automatische versnellingsbak
Carb.	Carburateur
CH	Chassis nummer
DOHC	Twee bovenliggende nokkenassen
EDC	Electronisch stabiliteitsprogramma
FWD	Voorwiel aandrijving
GPL	Liquid petroleum gas
HD	Versterkte ophanging/verhoogde nuttige last
HST	Hydraulische ophangingstechnologie
Inject.	Inspuiting
IST	Onafhankelijke ophangingstechnologie
L.H.D	Linkse besturing
Man. GBX	Manuele versnellingbak
Mod.	Referentie model
Mot.	Motor referentie
R.H.D	Rechtse besturing
SPS	Sportophanging
VKD/A/C/P/S XXXXX T	In productie
VKD/A/C/P/S XXXXX T	Product wordt gelanceerd in 2006
VKD/A/C/P/S ____	Product in ontwikkeling
VKD/A/C/P/S XXXXX T	Wordt niet meer gemaakt
––	Geen set beschikbaar

Opmerkingen

1) Uitgezonderd “Riche distinctive”
2) Uitgezonderd uitrustingcode 1BA
3) Uitgezonderd “Oost-Europa”
4) Speciale motorbeschermingsplaat
5) Uitgezonderd uitrustingcode \48/
6) Uitgezonderd uitrustingcode \50
7) Uitgezonderd uitrustingcode \51/
8) Uitgezonderd uitrustingcode \52/
9) Uitgezonderd uitrustingcode \64/
10) Uitgezonderd uitrustingcode 566
11) Uitgezonderd uitrustingcode 567
12) Uitgezonderd uitrustingcode G03
13) Uitgezonderd uitrustingcode G19
14) Uitgezonderd uitrustingcode G21
15) Uitgezonderd uitrustingcode 1JF
16) Uitgezonderd uitrustingcode UB2
17) Uitrustingcode 1JF
18) Uitrustingcode 1JF
19) Uitgezonderd uitrustingcode G92
20) Uitgezonderd uitrustingcode 1JC
21) Uitgezonderd uitrustingcode UB5
22) Uitrustingcode 1JC
23) Uitrustingcode UB5
24) Uitrustingcode 1JB
25) Uitrustingcode 1JD
26) Uitrustingcode 1JH
27) Uitrustingcode 1JA
28) Uitrustingcode UB8
29) Uitrustingcode UA9
30) Uitrustingcode UB1
31) Uitrustingcode UB3
32) Uitrustingcode 1JK
33) Uitgezonderd uitrustingcode 1JH

Information Plate to 1996

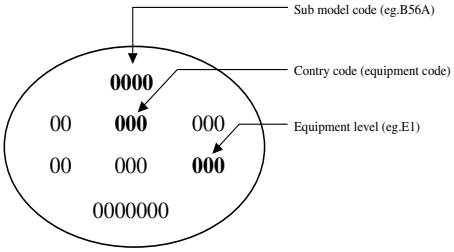

Information Plate from 1996

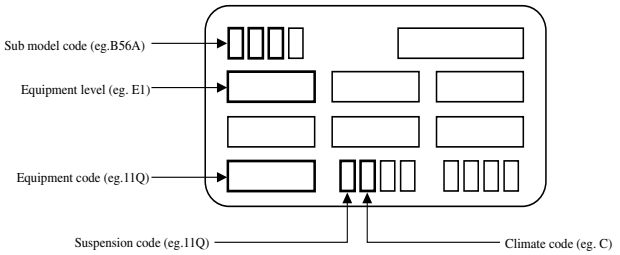

A = Normal suspension
B = Reinforced suspension

C = Tempered climate
D = Cold climate
E = Hot climate

VAG (Audi, Seat, Skoda, VW)

Identificatieplaat vastgekleefd in de koffer in het omhulsel van het reservewiel

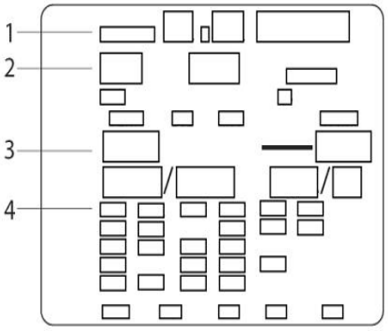

1) Identificatienummer

2) Modelcode

3) Motorcode

4) Uitrustingcode

NEDERLANDS

Hoe deze catalogus te gebruiken

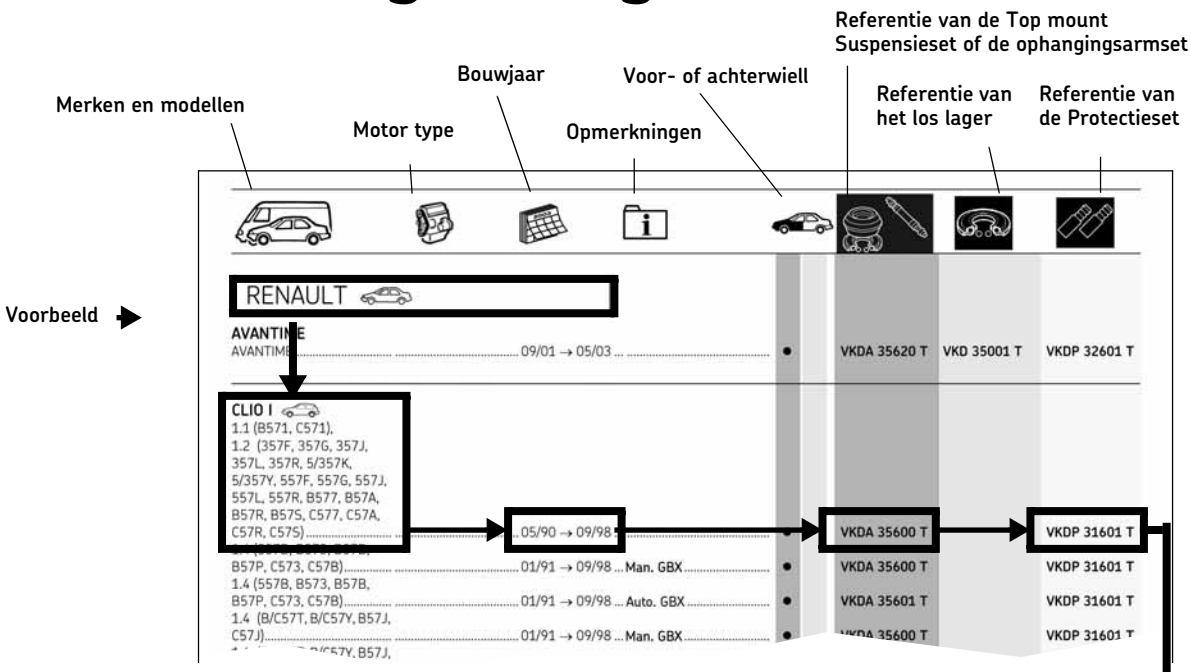

Visuele identificatie

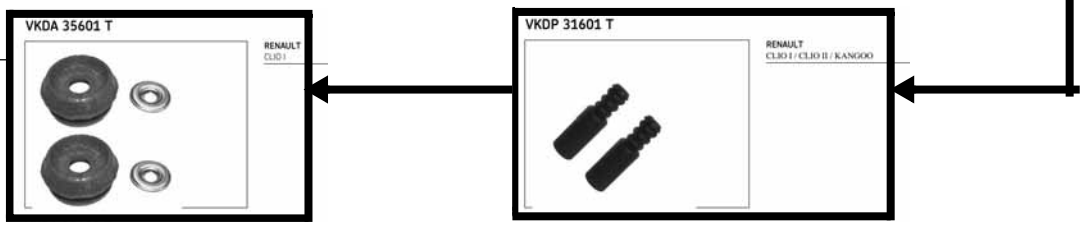

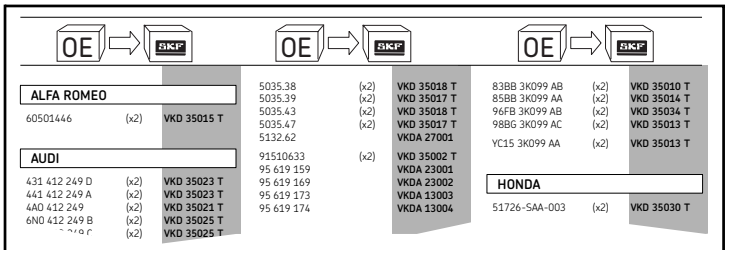

Crosslijst – OE naar SKF

Schok-demper-lijst

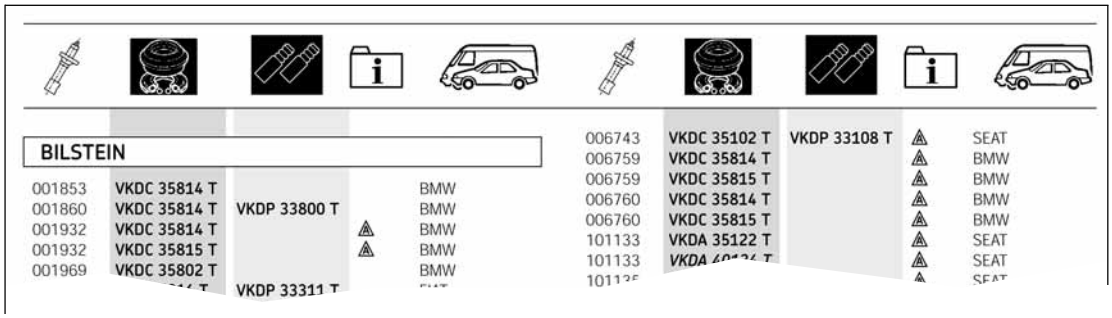

Inhoud van de set

Top mount onderdelen

	A	B	C	D	E	F	G
VKD 24000		1					
VKD 35001 T		2					
		2					

	A	B	C	D	E	F	G
VKDC 35205				1			
VKDC 35206				1			

Stootkussen/ montageset
Veerpootlager
Geïntegreerde unit
O-ring
Afdichtring
Rubberen kussen
Borgring

Ophangingsarmset onderdelen

	A	B	C	D	E	F	G	H
VKDA 13003	2	1	2	2	2	2	4	
VKDA 13004	2					2		
VKDA 23001	2	1	1		1	4	1	

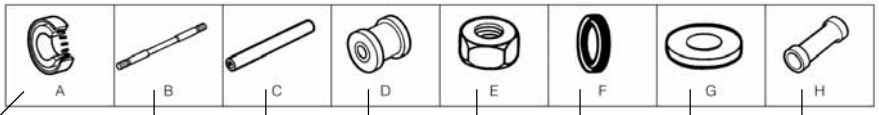

Kegellager
Pen
Penkap
Kruiskoppeling
Borgring
O-ring
Afdichtring
Stofkap

Onderdelen van de protectieset

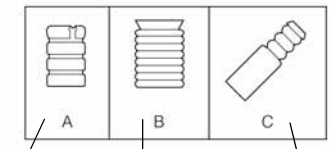

Bumper
Stofkap
Bumper met stofkap

	A	B	C
VKDP 31200 T			2
VKDP 31400 T			2
			2

	A	B	C
VKDP 41600 T			2
VKDP 43100 T	2	2	

Fuseekogel onderdelen

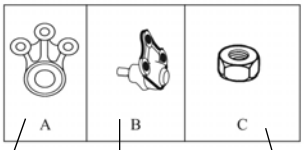

Lager
Fuseekogel
Moer

	A	B	C
VKDS 13500	1	1	1

Symbole

Oznaczenia w katalogu

Nowe zestawy i zamienniki

Tabela doboru zestawów

Ilustracje i uproszczona lista zastosowań

Sklad zestawów

Zamienniki – z oznaczeuproducenta na SKF

Lista

Symbole uniwersalne

Zestawy zastapione

Zestawy wycofane

Sworzeń wahacza

Zestawy wycofane

Kombi

Hatchback

Fastback/liftback

Coupé

Kabriolet

Zabudowany

Bus

Dostawczy

Pickup

Udzwig (kg)

Wyposazenie terenowe

Anti-roll bar

O wydluzonym nadwoziu

Liczba drzwi

Wspomaganie kierownicy

Kola

Srednica

Poduszka powietrzna

Modele europejskie

Modele na rynek szwedzki

Więcej informacji na stronach 9–119

Objaśnienia

I—>	Od
—>I	Az do
/	Z wyjatkiem
2WD	Naped na jedna os
AAS	Zawies
ABS	Z ABS
AC	Z klimatyzacja
Auto. GBX	Z automatyczna skrzyniabiegów
Carb.	Gaɲnik
CH	Numer podwozia
DOHC	Uklad z dwoma walkami rozrzadu
EDC	Uklad EDC
FWD	Przedni naped
GPL	Liquid petroleum gas
HD	O podwyzszonej wytrzymalosci
HST	Zawieszenie hydrauliczne
Inject	Wtrysk
IST	Niezależne sawieszenie
L.H.D	Kierownica z lewej strony
Man. GBX	Z reczna skrzynia biegów
Mod.	Numer modelu
Mot.	Silnik
R.H.D	Kierownica z prawej strony
SPS	Zawieszenie sportowe
VKD/A/C/P/S XXXXX T	Oferowane
VKD/A/C/P/S XXXXX T	Produkt wprowadzony w 2006
VKD/A/C/P/S ____	Produkt opracowywany
VKD/A/C/P/S XXXXX T	Wycofane z produkcji
—	Brak zestawu

Uwagi

1) Z wyjatkiem “Riche distinctive”
2) Z wyjatkiem kod wyposazenia 1BA
3) Z wyjatkiem “Eastern Europe”
4) Special engine protection plate
5) Z wyjatkiem kod wyposazenia \48/
6) Z wyjatkiem kod wyposazenia \50
7) Z wyjatkiem kod wyposazenia \51/
8) Z wyjatkiem kod wyposazenia \52/
9) Z wyjatkiem kod wyposazenia \64/
10) Z wyjatkiem kod wyposazenia 566
11) Z wyjatkiem kod wyposazenia 567
12) Z wyjatkiem kod wyposazenia G03
13) Z wyjatkiem kod wyposazenia G19
14) Z wyjatkiem kod wyposazenia G21
15) Z wyjatkiem kod wyposazenia 1JF
16) Z wyjatkiem kod wyposazenia UB2
17) Kod wyposazenia 1JF
18) Kod wyposazenia UB2
19) Z wyjatkiem kod wyposazenia G92
20) Z wyjatkiem kod wyposazenia 1JC
21) Z wyjatkiem kod wyposazenia UB5
22) Kod wyposazenia 1JC
23) Kod wyposazenia UB5
24) Kod wyposazenia 1JB
25) Kod wyposazenia 1JD
26) Kod wyposazenia 1JH
27) Kod wyposazenia 1JA
28) Kod wyposazenia UB8
29) Kod wyposazenia UA9
30) Kod wyposazenia UB1
31) Kod wyposazenia UB3
32) Kod wyposazenia 1JK
33) Z wyjatkiem kod wyposazenia 1JH

RENAULT

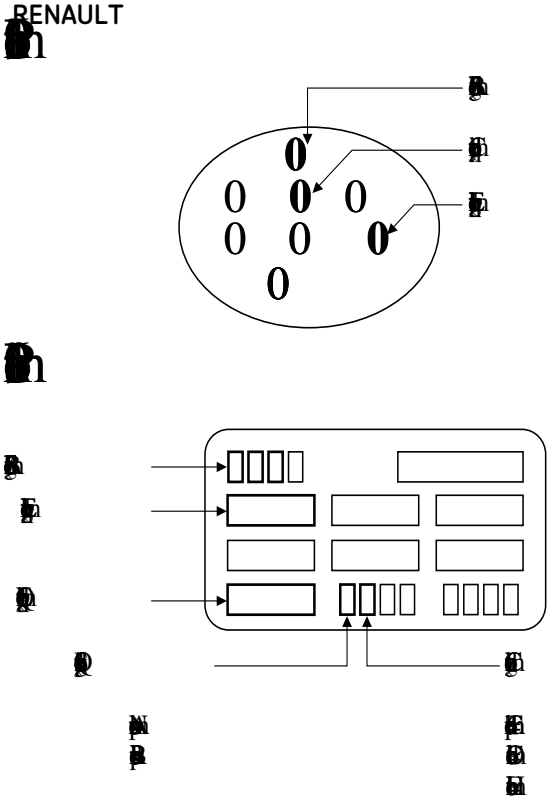

VAG (Audi, Seat, Skoda, VW)

Tabliczka identyfikacyjna umieszczona we wnęce koła zapasowego.

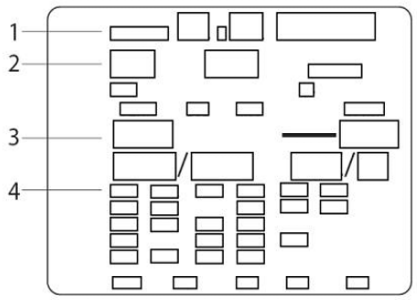

1) Numer identyfikacyjny

2) Kod modelu

3) Kod silnika

4) Kod wyposazenia

POLSKI

Jak korzystać z katalogu

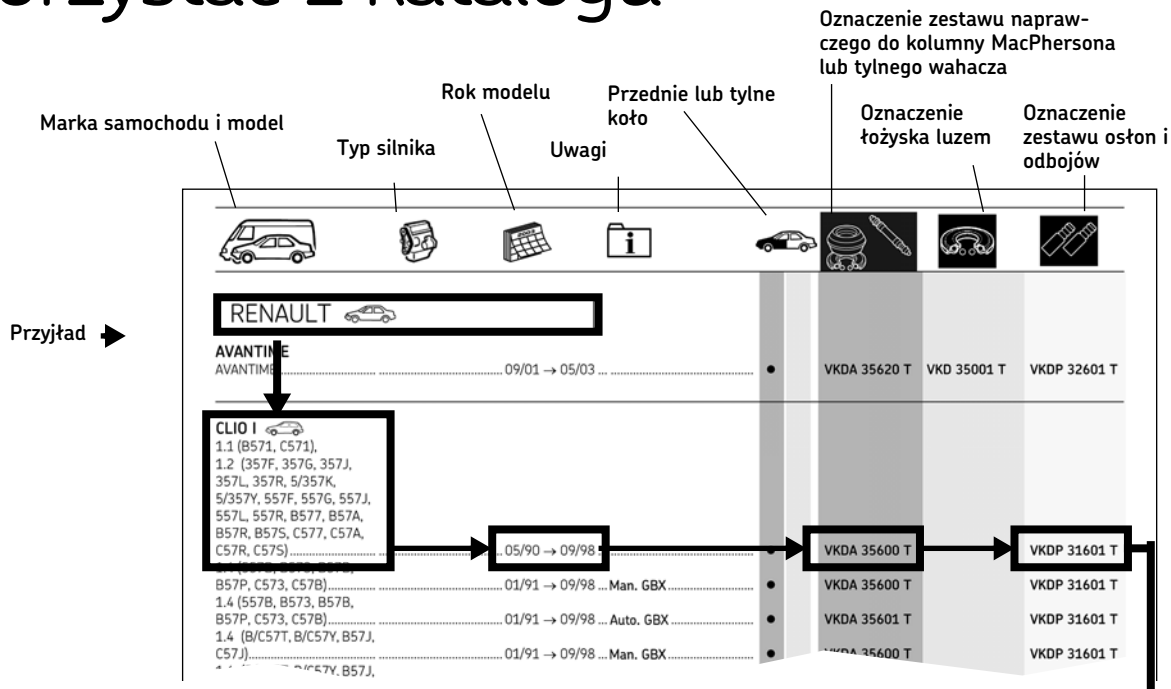

Identyfikacja wizualna

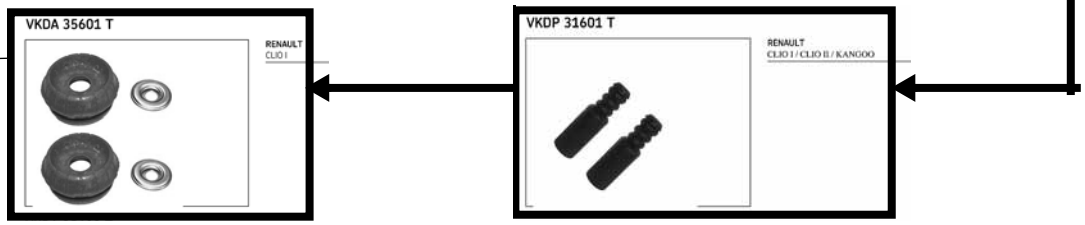

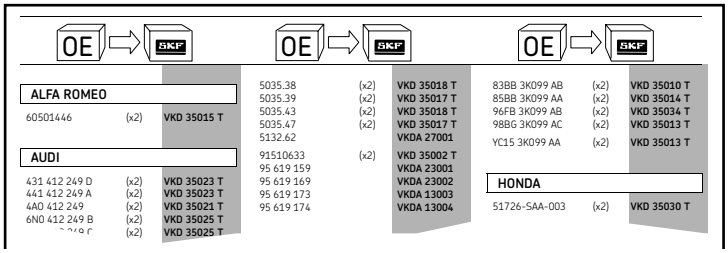

OE – odpowiednik SKF

Lista amortyzatorów

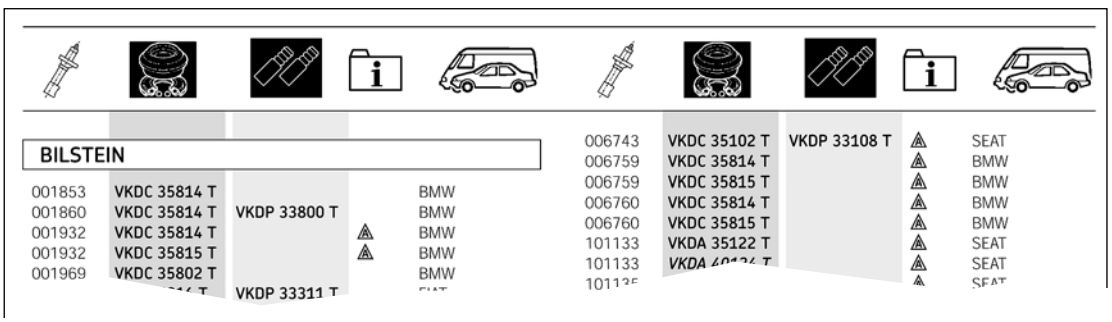

Zawartość zestawów naprawczych

Zawartość zestawów naprawczych

	A	B	C	D	E	F	G
VKD 24000		1					
VKD 35001 T		2					
		2					

	A	B	C	D	E	F	G
VKDC 35205				1			
VKDC 35206				1			

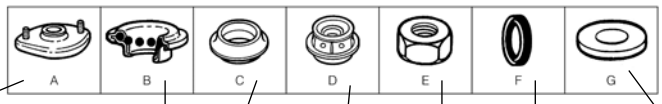

Górne mocowanie amortyzatora
Strut bearing
Poduszka gumowa
Element meta-lowo-gumowy
Nakrétka
O-ring
Podkładka

Zawartość zestawu naprawczego

	A	B	C	D	E	F	G	H
VKDA 13003	2	1	2	2	2	2	4	
VKDA 13004	2					2		
VKDA 23001	2	1	1		1	4	1	

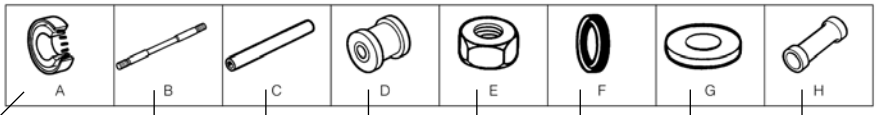

Łożysko stożkowe
Sworzeń
Tuleja sworznia
Tuleja dystansowa
Nakrętka
O-ring
Podkładka
Osłona plastikowa

Zestaw osłon u odbojów

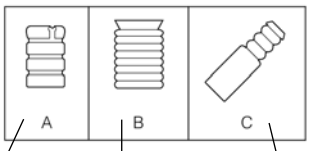

Bumper
Osłona plastikowa
Osłona z odbojem

	A	B	C
VKDP 31200 T			2
VKDP 31400 T			2
			2

	A	B	C
VKDP 41600 T			2
VKDP 43100 T	2	2	

Zestaw naprawczy sworznia wahacza

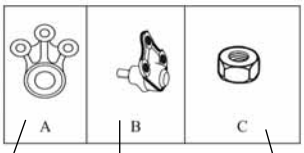

Łożysko
Sworzeń wahacza
Nakrętka

	A	B	C
VKDS 13500	1	1	1

POLSKI

Symboler

Kapitelsymboler

Nya satser, ersättningar och annullerade satser

Fordonsapplikationer

Illustrationer och förenklad applikationslista

Innehåll i satserna

Översättningslista – OE till SKF

Jämförelselista – stötdämpare

Universella symboler

Ersätttningar

Annullerade satser

Kulledssats

Personvagn

Herrgårdsvagn

Halvkombi

Halvkombi

Coupé

Cabriolet

Transportvagn

Minibus

Van

Pick up

Lastkapacitet (kg)

"Rough-road" utrustning

Krängningshämmare

Spårvidd

Antal dörrar

Servostyrning

Hjul

Diameter

Airbag

Modeller för Europa

Modeller för Sverige

För korrekt information läs sidorna 9 till 119

Förkortningar

I—>	Från
—>I	Upp till
/	Utom
2WD	2-hjulsdrift
AAS	Automatisk justering av upphängningen/
ABS	Låsningsfria bromsar
AC	Luftkonditionering
Auto. GBX	Automatisk växellåda
Carb.	Förgasare
CH	Chassibeteckning
DOHC	Dubbla överliggande kamaxlar
EDC	Elektronisk stötdämpningskontroll
FWD	Framhjulsdrivna modeller
GPL	Naturgasdrift
HD	Förstärkt axel
HST	Hydraulisk fjädringsteknologi
Inject	Bränsleinsprutning
IST	Oberoende fjädringsteknologi
L.H.D	Vänsterstyrd
Man. GBX	Manuell växellåda
Mod.	Modellbeteckning
Mot.	Motorbeteckning
R.H.D	Högerstyrd
SPS	Sportfjädring
VKD/A/C/P/S XXXXX T	I produktion
VKD/A/C/P/S XXXXX T	Produkt som kommer under 2006
VKD/A/C/P/S ____	Produkter under utveckling
VKD/A/C/P/S XXXXX T	Tillverkas ej längre
—	Sats finnes ej

Anmärkningar

1) Ej för “Riche distinctive”
2) Ej för utrustningskod 1BA
3) Ej för “Eastern Europe”
4) Speciell motorskyddsplåt
5) Ej för utrustningskod \48/
6) Ej för utrustningskod \50
7) Ej för utrustningskod \51/
8) Ej för utrustningskod \52/
9) Ej för utrustningskod \64/
10) Ej för utrustningskod 566
11) Ej för utrustningskod 567
12) Ej för utrustningskod G03
13) Ej för utrustningskod G19
14) Ej för utrustningskod G21
15) Ej för utrustningskod 1JF
16) Ej för utrustningskod UB2
17) Utrustningskod 1JF
18) Utrustningskod UB2
19) Ej för utrustningskod G92
20) Ej för utrustningskod 1JC
21) Ej för utrustningskod UB5
22) Utrustningskod 1JC
23) Utrustningskod UB5
24) Utrustningskod 1JB
25) Utrustningskod 1JD
26) Utrustningskod 1JH
27) Utrustningskod 1JA
28) Utrustningskod UB8
29) Utrustningskod UA9
30) Utrustningskod UB1
31) Utrustningskod UB3
32) Utrustningskod 1JK
33) Ej för utrustningskod 1JH

RENAULT

***) Renault identifieringsplåt ⟶ 1996**

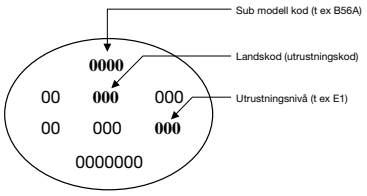

***) Renault identifieringsplåt 1996 ⟶**

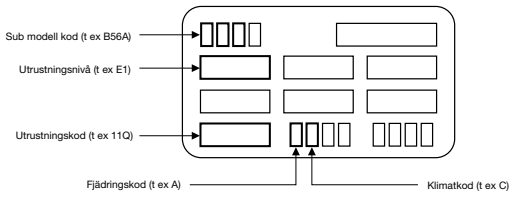

VAG

Identifieringsplåt återfinns i bagageutrymmets reservhjulsutrymme

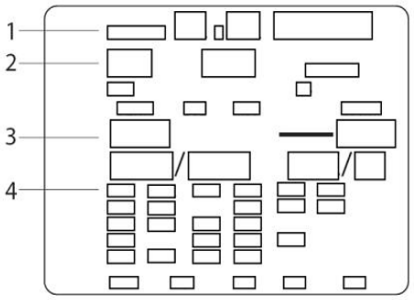

1) Identifikationsnummer

2) Modellkod

3) Motorkod

4) Utrustningskod

SVENSKA

Hur man använder katalogen

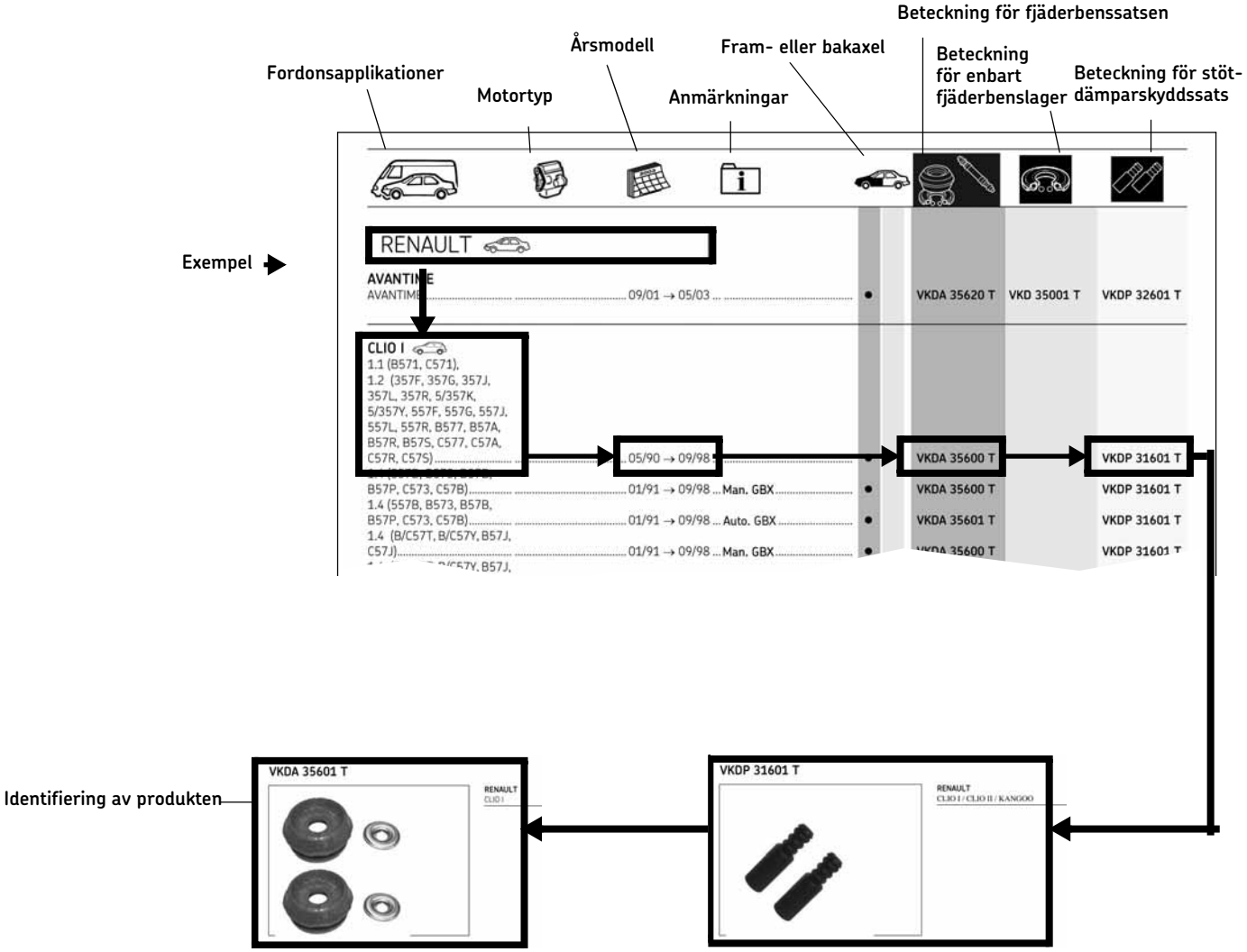

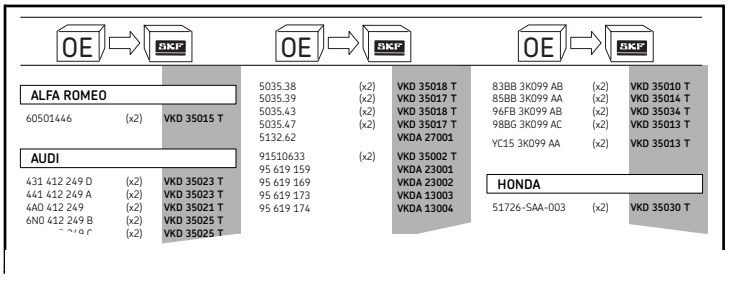

Översättningslista – OE till SKF

Jämförelse-lista – stötdämpare

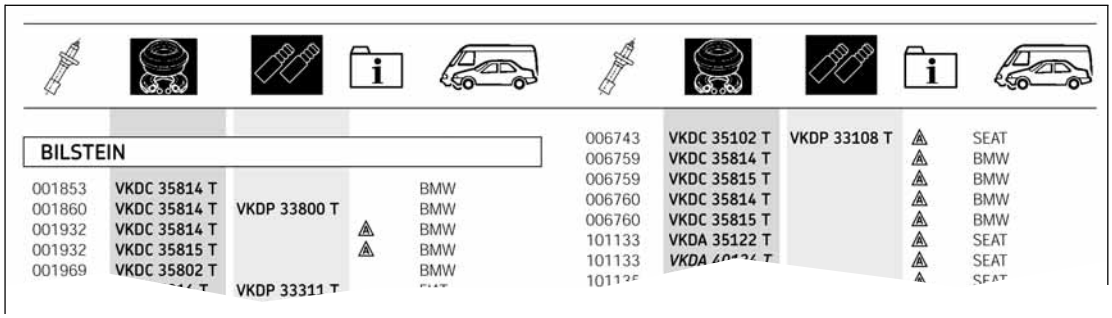

Satsinnehåll

Komponenter för Top mount sats

	A	B	C	D	E	F	G
VKD 24000		1					
VKD 35001 T		2					
		2					

	A	B	C	D	E	F	G
VKDC 35205				1			
VKDC 35206				1			

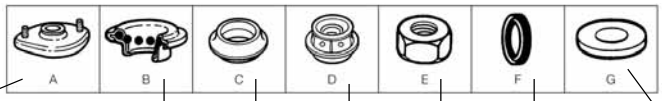

Dämpningsenhet
Fjäderbenslager
Integrerad enhet
O-ring
Bricka
Gummidämpning
Låsmutter

Komponenter för länkarmsats

	A	B	C	D	E	F	G	H
VKDA 13003	2	1	2	2	2	2	4	
VKDA 13004	2					2		
VKDA 23001	2	1	1		1	4	1	

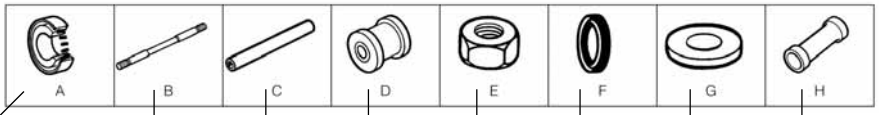

Koniskt rullager
Pivotbult
Pivothylsa
Kulled
Låsmutter
O-ring
Bricka
Dammskydd

Komponenter för stötdämparskyddssats

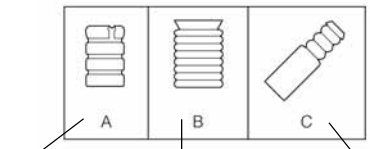

Gummi-dämpare
Dammskydd
Gummidämpare med dammskydd

	A	B	C
VKDP 31200 T			2
VKDP 31400 T			2
			2

	A	B	C
VKDP 41600 T			2
VKDP 43100 T	2	2	

Komponenter för kulledssats

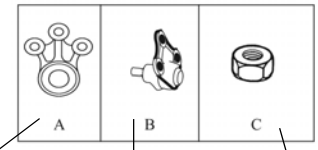

Lager
Kulled
Mutter

	A	B	C
VKDS 13500	1	1	1

SVENSKA

Symboler

Symboler for katalog seksjoner

Nye, erstatninger og utgåtte satser

Bilmarke og modeller

Produktillustrationer og forenklet klassifiseringsliste

Innhold i settet

Overssettningsliste – OE til SKF

Konverteringsliste – støtdemper

Universale symboler

Erstatninger

Utgåtte satser

Kule ledd sats

Personbil

Stasjonsvogn

Kombibil

Kombibil

Kupé

Åpen bil

Eske

Buss, minibuss

Van

"Pickup"

Lastekapasitet (kg)

Utstyr for ujevn veibane

Krengningsstabilisator

Utstyr for ujevn veibane

Antall dører

Servostyring

Hjul

Diameter

Airbag

Europeisk modell

Modeller for Sverige

For riktig informasjon se side 9 til 119

Forkortelser

I—>	Fra
—>I	Til
/	Unntatt
2WD	2-hjulsdrift
AAS	Automatisk fjæringsjustering
ABS	Blokkeringsfrie bremser
AC	Air condition
Auto. GBX	Automatisk girkasse
Carb.	Carburator
CH	Understell
DOHC	Dobblet overliggende kamaksel
EDC	Elektronisk dempingskontroll
FWD	Framhjulsdrift
GPL	Flytende petroleumsgass
HD	Tåler stor belastning
HST	Hydraulisk støtdempings teknologi
Inject	Injection
IST	Uavhengig støtdempings teknologi
L.H.D	Ratt på venstre side
Man. GBX	Manuell girkasse
Mod.	Modellreferense
Mot.	Motorreferense
R.H.D	Ratt på høyre side
SPS	Sportsfjæring
VKD/A/C/P/S XXXXX T	I produksjon
VKD/A/C/P/S XXXXX T	Nye produkter i løpet av 2006
VKD/A/C/P/S ____	Produkter under utvikling
VKD/A/C/P/S XXXXX T	Ikke lenger i produksjon
—	Kitsett ikke tilgjengelig

Remarks

1) Unntatt “Riche distinctive”
2) Unntatt utstyrskode 1BA
3) Unntatt “Eastern Europe”
4) Spesial motorbeskyttelses plate
5) Unntatt utstyrskode \48/
6) Unntatt utstyrskode \50
7) Unntatt utstyrskode \51/
8) Unntatt utstyrskode \52/
9) Unntatt utstyrskode \64/
10) Unntatt utstyrskode 566
11) Unntatt utstyrskode 567
12) Unntatt utstyrskode G03
13) Unntatt utstyrskode G19
14) Unntatt utstyrskode G21
15) Unntatt utstyrskode 1JF
16) Unntatt utstyrskode UB2
17) Utstyrskode 1JF
18) Utstyrskode UB2
19) Unntatt utstyrskode G92
20) Unntatt utstyrskode 1JC
21) Unntatt utstyrskode UB5
22) Utstyrskode 1JC
23) Utstyrskode UB5
24) Utstyrskode 1JB
25) Utstyrskode 1JD
26) Utstyrskode 1JH
27) Utstyrskode 1JA
28) Utstyrskode UB8
29) Utstyrskode UA9
30) Utstyrskode UB1
31) Utstyrskode UB3
32) Utstyrskode 1JK
33) Unntatt utstyrskode 1JH

RENAULT

***) Renault Identifikasjonsplate → 1996**

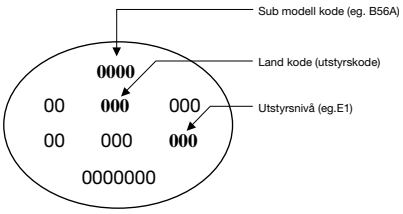

***) Renault Identifikasjonsplate 1996 →**

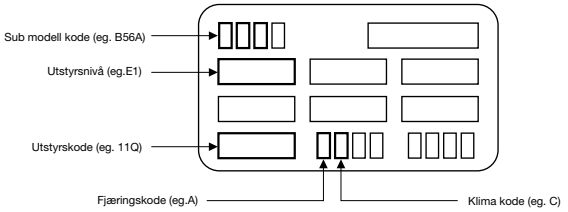

A= Normal fjæring
B = Forsterket hjuloppheng

C = Temperert klima
D = Kjølig klima
E = Tropisk klima

VAG (Audi, Seat, Skoda, VW)

Identifiseringsskilt i bagasjerommet, montert i reservehjulshuset

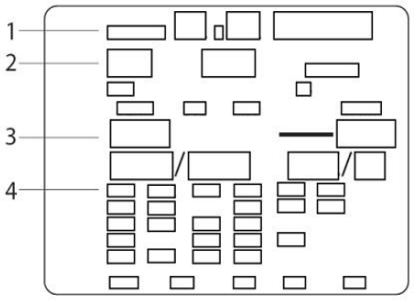

1) Identifikasjonsnummer

2) Modellkode

3) Motorkode

4) Utstyrskode

NORSK

Hvordan man bruker katalogen

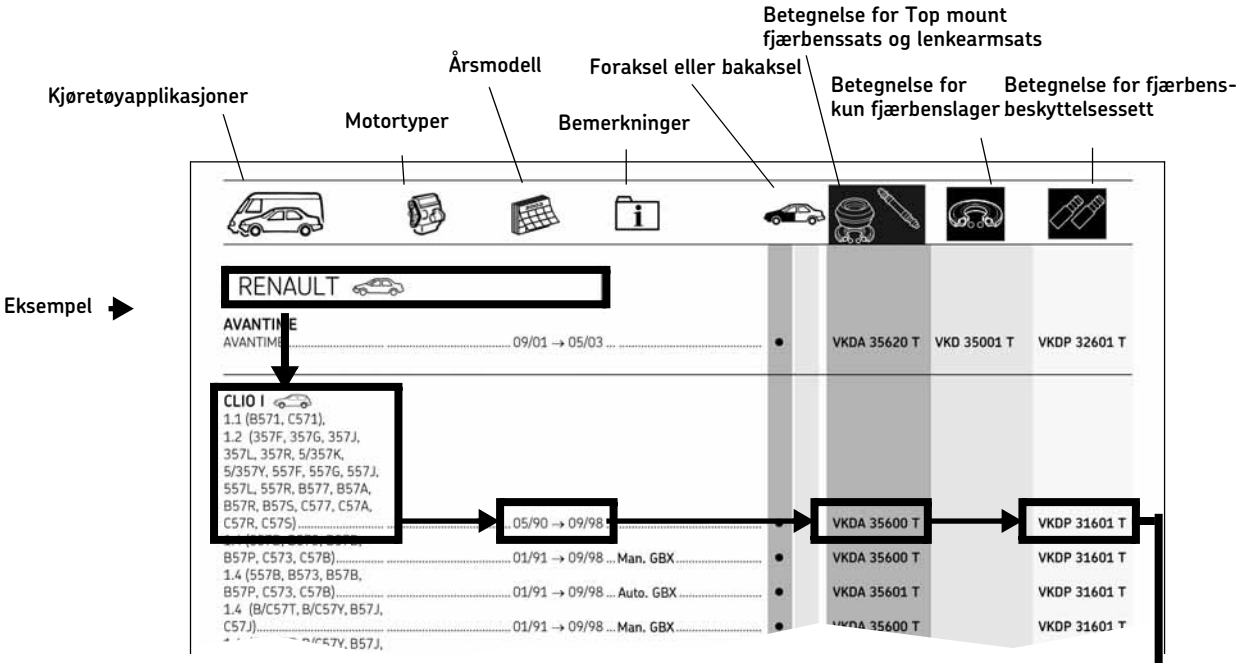

Visuell identifikasjon

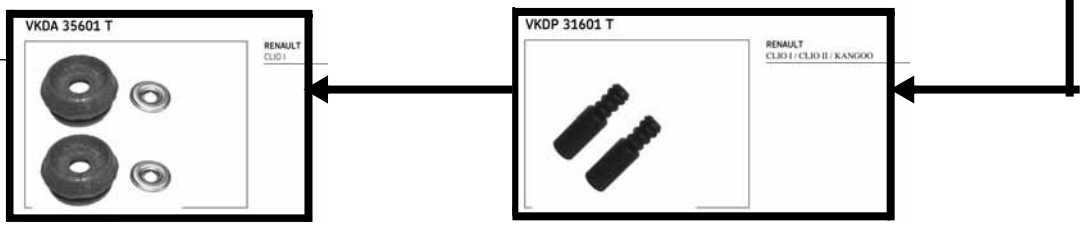

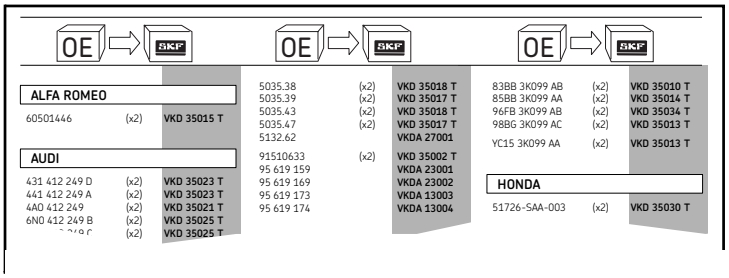

Oversettelsesliste – OE til SKF

Konverte-ringsliste – støtdemper

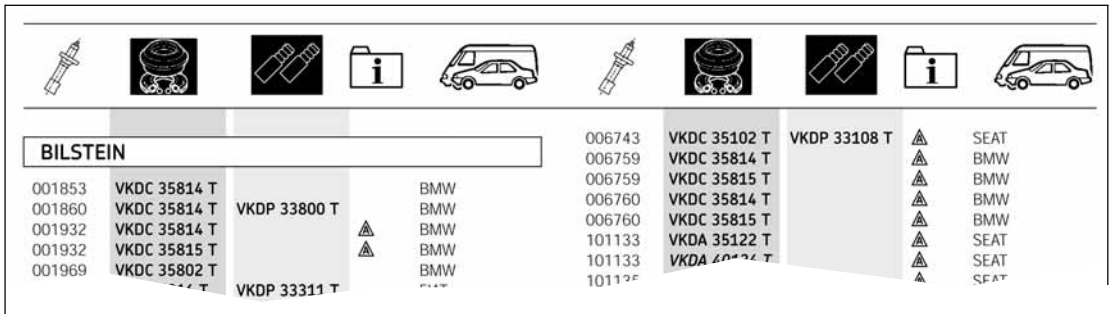

Satsens innhold

Komponenter i Top mount satser

	A	B	C	D	E	F	G
VKD 24000		1					
VKD 35001 T		2					
		2					

	A	B	C	D	E	F	G
VKDC 35205				1			
VKDC 35206				1			

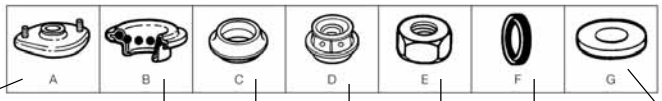

Støtdemper/ isolator
Fjærbenslager
Gummiblokk
Komplett enhet
Låsemutter
O-ring
Brikke

Komponenter i lenkarmsatser

	A	B	C	D	E	F	G	H
VKDA 13003	2	1	2	2	2	2	4	
VKDA 13004	2					2		
VKDA 23001	2	1	1		1	4	1	

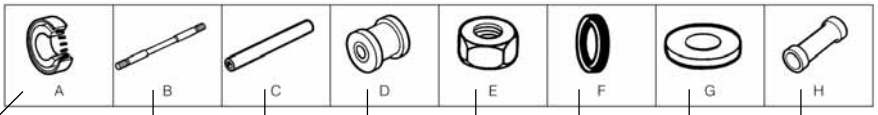

Koniske rullelager
Pivotbolt
Pivothylse
Styreledd
Låsemutter
O-ring
Brikke
Støvdeksel

Komponenter i fjærbensbeskyttelsessatser

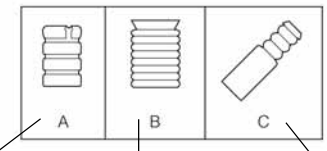

Gummi-demper
Mansjett
Gummidemper med mansjett

	A	B	C
VKDP 31200 T			2
VKDP 31400 T			2
			2

	A	B	C
VKDP 41600 T			2
VKDP 43100 T	2	2	

Komponenter i kuleleddsatser

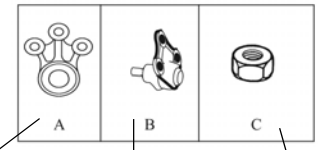

Lager
Kuleledd
Låsemutter

	A	B	C
VKDS 13500	1	1	1

NORSK

Symboler

Symboler for katalog sektioner

Nye sæt, erstatninger og annullerede sæt

Bilmærker og modeller

Produktillustrationer og bilmærkeoversigt

Indhold i sæt

Omsætningslister – OE til SKF

Omsætningslister – støddæmpere

Universale symboler

Erstatninger

Annullerede sæt

Kugleled

Personvogne

Stationcars

Hatchback

Fastback/liftback

Coupe

Cabriolet

Kassevogn

Bus, minibus

Van

Pickup

Lastkapacitet (kg)

Off-road udstyr

Krægningsstabilisator

Forlænget hjulafstand

Antal døre

Servostyring

Hjul

Diameter

Airbag

Europæiske modeller

Modeller til Sverige

For korrekt information se side 9 til 119

Forkortelser

I—>	Fra
—>I	Til
/	Uden
2WD	2-hjulstræk
AAS	Justerbar undervogn
ABS	ABS bremser
AC	Air-condition
Auto. GBX	Automatisk gearkasse
Carb.	Carburator
CH	Chassis reference
DOHC	Dobbel overliggende knastaksel
EDC	Elektronisk støddæmperkontrol
FWD	Forhjulstræk
GPL	Naturgas
HD	Forstærket
HST	Hydraulisk ophængs teknologi
Inject	Fuel inject.
IST	Uafhængig ophængs teknologi
L.H.D	Venstrestyret
Man. GBX	Manuel gearkasse
Mod.	Model reference
Mot.	Motor reference
R.H.D	Højrestyret
SPS	Sport affjedring
VKD/A/C/P/S XXXXX T	Produceres
VKD/A/C/P/S XXXXX T	Produkter som lanceres i 2006
VKD/A/C/P/S ____	Produkter under udvikling
VKD/A/C/P/S XXXXX T	Produceres ikke mere
—	Sæt kan ikke leveres

Anmærkninger

1) Ikke til “Riche distinctive”
2) Ikke til udstyrskode 1BA
3) Ikke til “Eastern Europe”
4) Speciel motor beskyttelsesplade
5) Ikke til udstyrskode \48/
6) Ikke til udstyrskode \50
7) Ikke til udstyrskode \51/
8) Ikke til udstyrskode \52/
9) Ikke til udstyrskode \64/
10) Ikke til udstyrskode 566
11) Ikke til udstyrskode 567
12) Ikke til udstyrskode G03
13) Ikke til udstyrskode G19
14) Ikke til udstyrskode G21
15) Ikke til udstyrskode 1JF
16) Ikke til udstyrskode UB2
17) Udstyrskode 1JF
18) Udstyrskode UB2
19) Ikke til udstyrskode G92
20) Ikke til udstyrskode 1JC
21) Ikke til udstyrskode UB5
22) Udstyrskode 1JC
23) Udstyrskode UB5
24) Udstyrskode 1JB
25) Udstyrskode 1JD
26) Udstyrskode 1JH
27) Udstyrskode 1JA
28) Udstyrskode UB8
29) Udstyrskode UA9
30) Udstyrskode UB1
31) Udstyrskode UB3
32) Udstyrskode 1JK
33) Ikke til udstyrskode 1JH

RENAULT

Identifikatiosplade → 1996

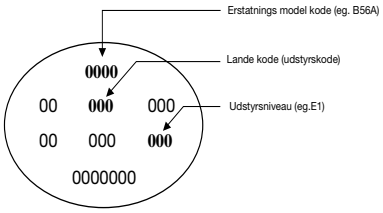

Identifikationsplade 1996 →

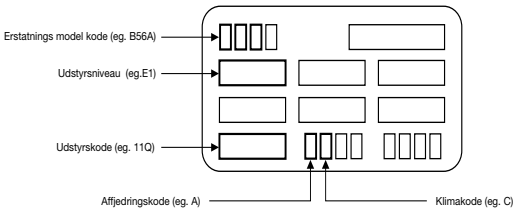

A= Normal affjedring
B = Med forstærket hjulophæng
C = Tempereret klima
D = Koldt klima
E = Tropisk klima

VAG (Audi, Seat, Skoda, VW)

Identifikationsplade findes i bagage-rummet ved reservehjulet.

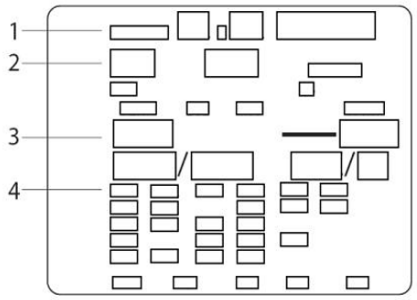

1) Identifikationnummer

2) Modelkode

3) Motorkode

4) Udstyrskode

DANSK

Hvordan man bruger kataloget

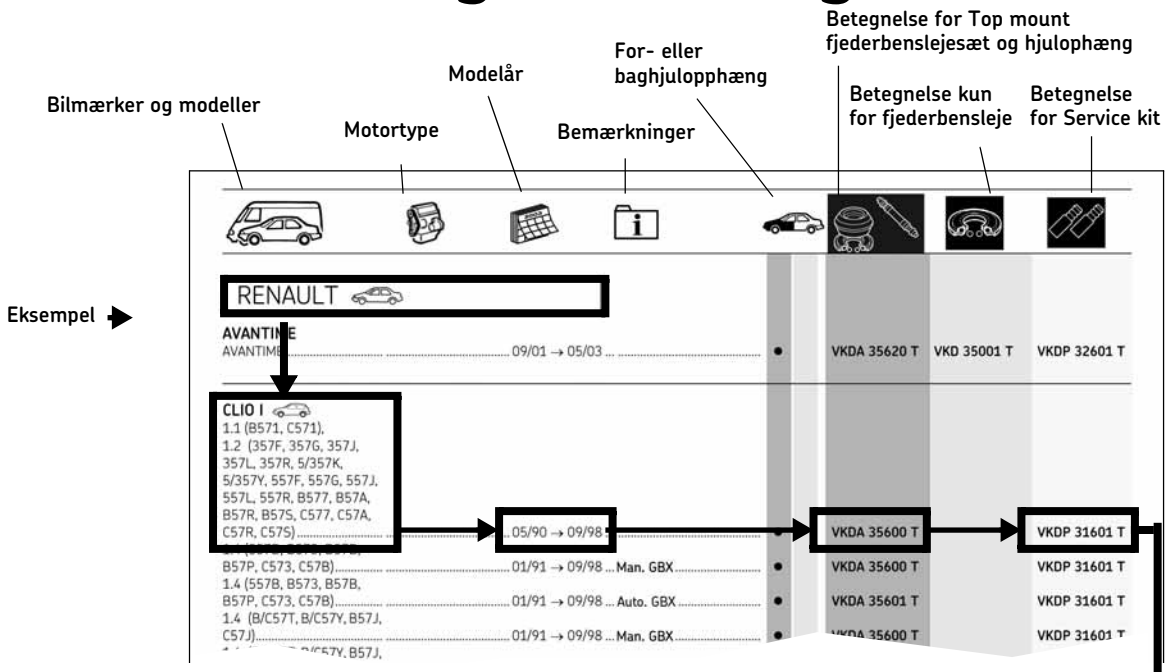

Produktidentifikation

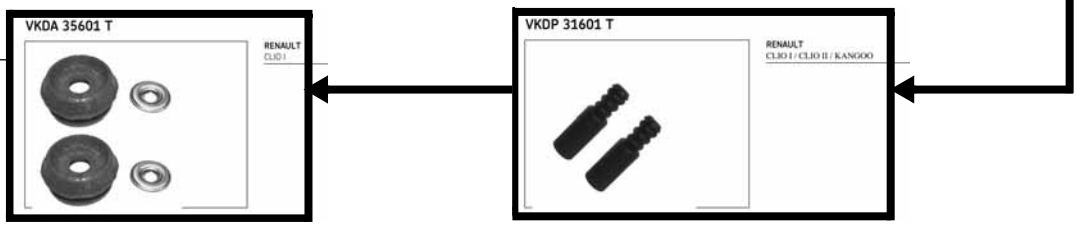

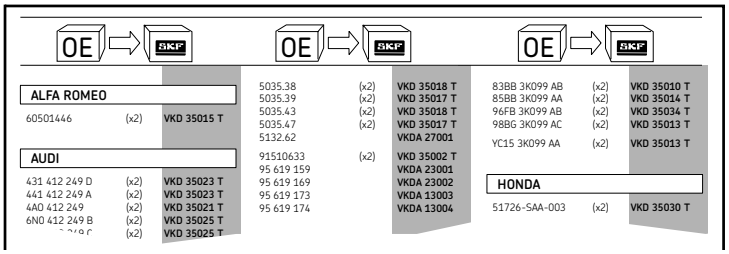

Ekvivalentsliste OE reference til SKF

Omsætnings-lister – støddæmpere

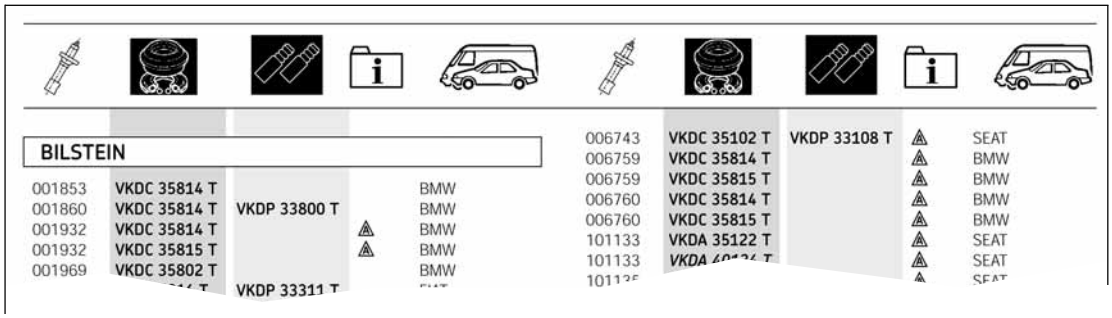

Indhold i sæt

Komponenter til MacPherson fjederbenssæt

	A	B	C	D	E	F	G
VKD 24000		1					
VKD 35001 T		2					
		2					

	A	B	C	D	E	F	G
VKDC 35205				1			
VKDC 35206				1			

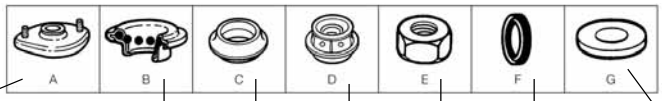

Gummiklods · Støtteleje · Gummienhed · Integreret enhed · Låsemøtrik · Pakdåse · Skive

Komponenter i bærearmssæt

	A	B	C	D	E	F	G	H
VKDA 13003	2	1	2	2	2	2	4	
VKDA 13004	2					2		
VKDA 23001	2	1	1		1	4	1	

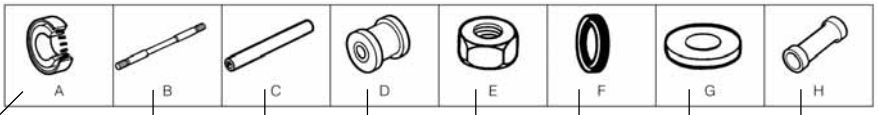

Konisk rulleleje · Styrebolt · Rør · Kugleled · Låsemøtrik · Pakdåse · Skive · Støvkappe

Komponenter i servicesæt

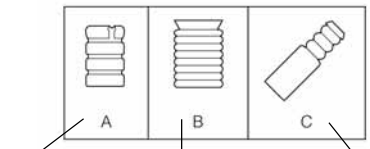

Gummibøsning · Støvmanchet · Gummibøsning med støvmanchet

	A	B	C
VKDP 31200 T			2
VKDP 31400 T			2

	A	B	C
VKDP 41600 T			2
VKDP 43100 T	2	2	

Komponenter i kugleledssæt

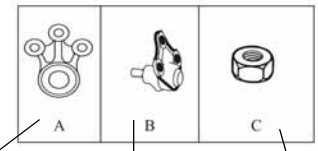

Leje · Kugleled · Møtrik

	A	B	C
VKDS 13500	1	1	1

DANSK

Symbolit

Luettelon symbolit ja lyhenteet

Uudet laakerisarjat, korvaavat merkinnät ja tuotannosta poistettu

Ajoneuvojen soveltuvuudet

Tuotekuvat ja pelkistetty sovellusluettelo

Sarjojen sisältö

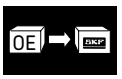

Vertailu – alkuperäisnumerosta SKF:ään

Vertailu – Iskunvaimentimet

Yleiset symbolit

Korvaavat merkinnät

Tuotannosta poistettu

Pallonivel

Henkilöauto

Farmariauto

Hatchback

Fastback/liftback

Coupé

Avoauto

Pakettiauto

Linja-auto

Pakettiauto

Avopakettiaauto

Hyötykuorma (kg)

Vahvistettu jousitus

Kallistuksenvaimennin

Pidennetty akseliväli

Ovien lukumäärä

Ohjaustehostin

Pyörä

Halkaisija

Turvatyyny

Eurooppalaiset mallit

Ruotsin mallit

Tiedon oikeellisuuden varmistamiseksi kts. sivut 9–119

Lyhenteet

I—>	Alkaen
—>I	Asti
/	Ei
2WD	2-pyöraveto
AAS	Automaattisesti säätyvä jousitus
ABS	Lukkiutumattomat jarrut
AC	Ilmastointilaitteella
Auto. GBX	Automaattivaihteistolla
Carb.	Kaasutin
CH	Alustan numero
DOHC	Kahdella yläpuolisella nokka-aksellia
EDC	Elektroninen iskunvaimenninsäätö
FWD	Etuvetoinen
GPL	Kaasuauto
HD	Vahvistettu jousitus
HST	Erillisjousitusjärjestelmä
Inject	Ruiskutus
IST	Erillisjousitusjärjestelmä
L.H.D	Ohjaus vasemmalla
Man. GBX	Käsivalintainen vaihteisto
Mod.	Malli
Mot.	Moottorin tyyppinumero
R.H.D	Oikeanpuoleinen ohjaus
SPS	"Sport" jousituksella
VKD/A/C/P/S XXXXX T	Tuotannossa
VKD/A/C/P/S XXXXX T	Tuote markkinoille vuoden 2006 aikana
VKD/A/C/P/S ____	Tuote kehitteillä
VKD/A/C/P/S XXXXX T	Valmistus lopetettu
—	Sarjaa ei saatavana

Huomautuksia

1) Ei “Riche distinctive”
2) Ei varustekoodi 1BA
3) Ei “Eastern Europe”
4) Erityinen moottorin suojalevy
5) Ei varustekoodi \48/
6) Ei varustekoodi \50
7) Ei varustekoodi \51/
8) Ei varustekoodi \52/
9) Ei varustekoodi \64/
10) Ei varustekoodi 566
11) Ei varustekoodi 567
12) Ei varustekoodi G03
13) Ei varustekoodi G19
14) Ei varustekoodi G21
15) Ei varustekoodi 1JF
16) Ei varustekoodi UB2
17) Varustekoodi 1JF
18) Varustekoodi UB2
19) Ei varustekoodi G92
20) Ei varustekoodi 1JC
21) Ei varustekoodi UB5
22) Varustekoodi 1JC
23) Varustekoodi UB5
24) Varustekoodi 1JB
25) Varustekoodi 1JD
26) Varustekoodi 1JH
27) Varustekoodi 1JA
28) Varustekoodi UB8
29) Varustekoodi UA9
30) Varustekoodi UB1
31) Varustekoodi UB3
32) Varustekoodi 1JK
33) Ei varustekoodi 1JH

RENAULT

***) Renaultin tunnistelevy ⟶ 1996**

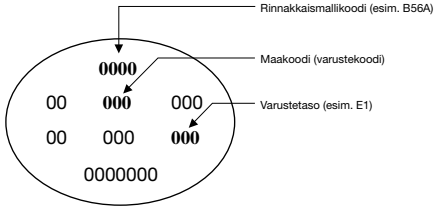

***) Renaultin tunnistelevy 1996 ⟶**

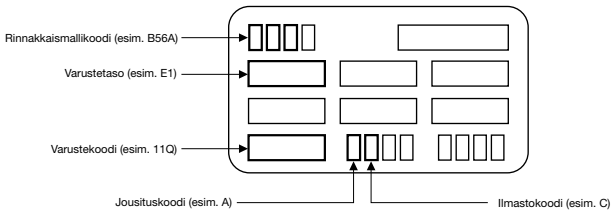

A= Normaali jousitus
B = Vahvistettu pyöränripustus

C = Lämmin ilmasto
D = Kylmä ilmasto
E = Trooppinen ilmasto

VAG (Audi, Seat, Skoda, VW)

Tunnistelevy takakontissa, varapyöräkotelossa

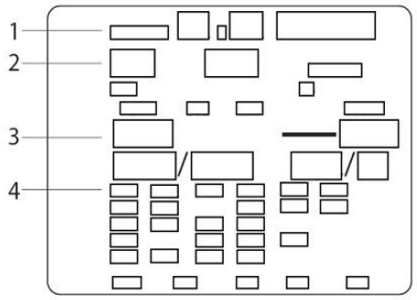

1) Tunnistelevynumero

2) Mallikoodi

3) Moottorinkoodi

4) Varustekoodi

Miten käytät luetteloa

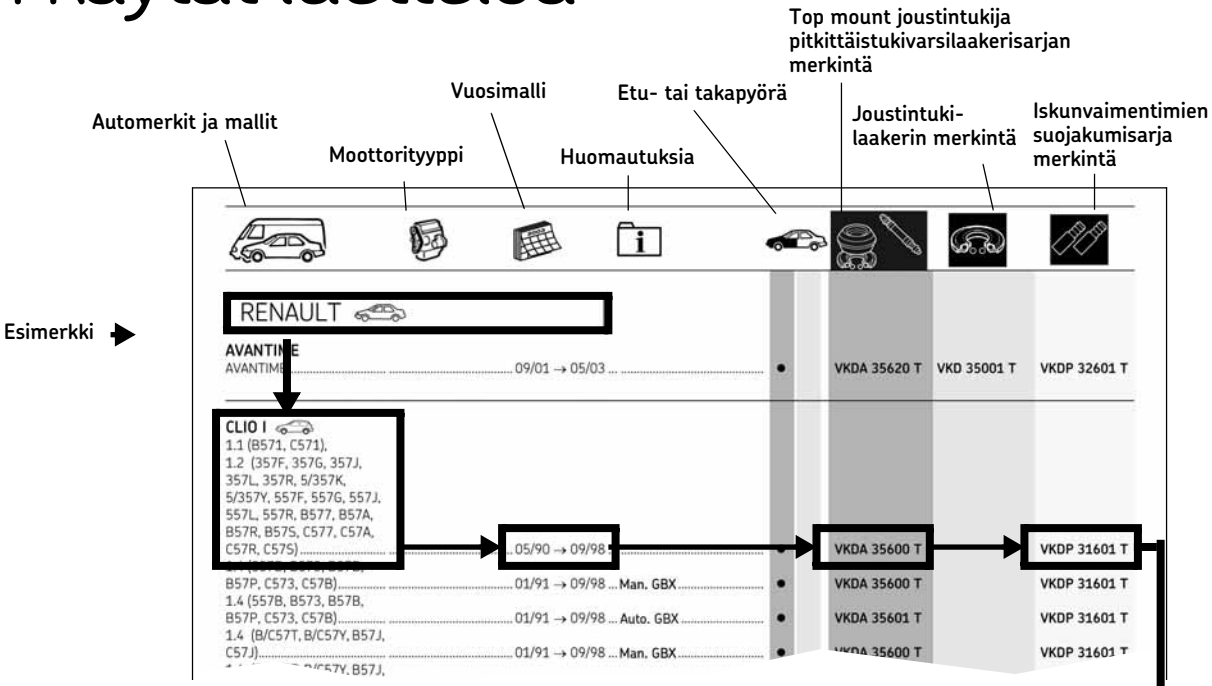

Visuaalinen tunnistus

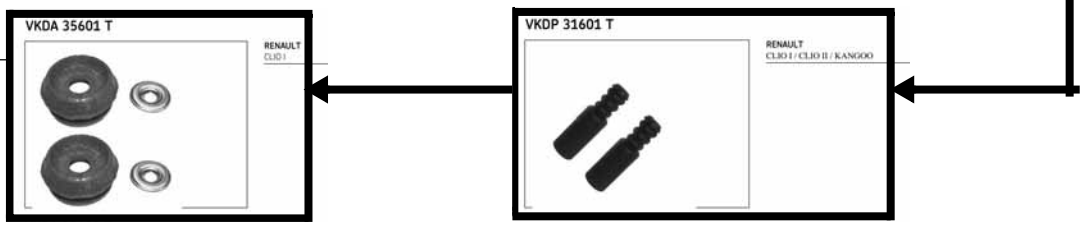

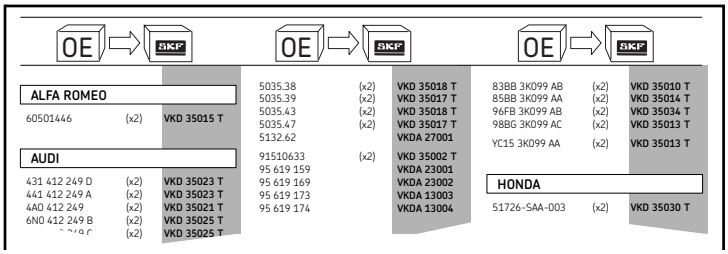

Vertailu – alkuperäisnumerosta SKF:ään

Vertailu – Iskunvaimentimet

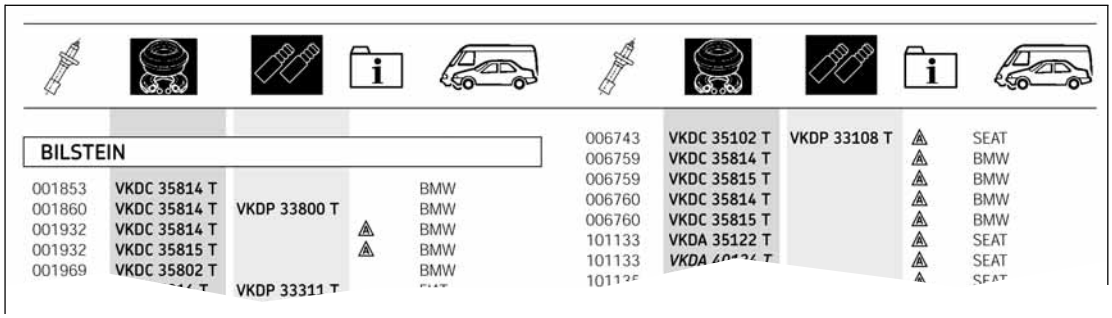

Sarjan sisältö

Top mount joustintukilaakerisarjan osat

	A	B	C	D	E	F	G
VKD 24000		1					
VKD 35001 T		2					
		2					

	A	B	C	D	E	F	G
VKDC 35205				1			
VKDC 35206				1			

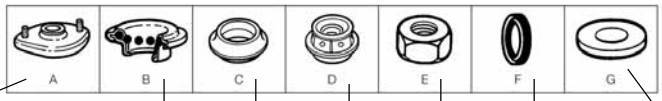

Vaimennin yksikkö — Joustintukilaakeri — Kumityyny — Integroitu yksikkö — Lukkomutteri — O-rengas — Aluslevy

Tukivarsisarjan osat

	A	B	C	D	E	F	G	H
VKDA 13003	2	1	2	2	2	2	4	
VKDA 13004	2					2		
VKDA 23001	2	1	1		1	4	1	

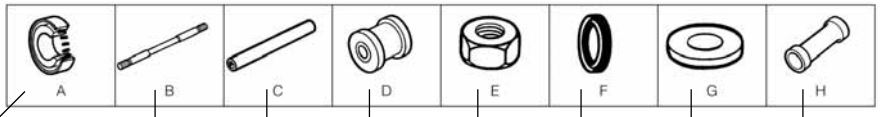

Kartiorullalaakeri — Akselitappi — Akseliholkki — Hela — Lukkomutteri — O-rengas — Aluslevy — Pölysuoja

Iskunvaimentimien suojakumisarja osat

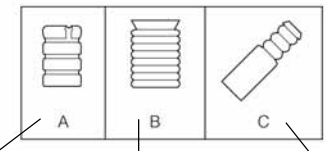

Pohjaan-lyöntikum — Suojakumi — Pohjaanlyöntikumi ja suojakumi

	A	B	C
VKDP 31200 T			2
VKDP 31400 T			2
			2

	A	B	C
VKDP 41600 T			2
VKDP 43100 T	2	2	

Pallonivelsarjan osat

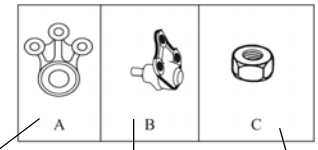

Laakeri — Pallonivel — Lukkomutteri

	A	B	C
VKDS 13500	1	1	1